CR

CR Classification Society

FOUNDED 1951

RULES FOR THE CONSTRUCTION AND CLASSIFICATION OF COAST GUARD SHIPS 2021

PART I — CLASSIFICATION AND SURVEY

August 2020

CR

CR Classification Society

FOUNDED 1951

RULES FOR THE CONSTRUCTION AND CLASSIFICATION OF COAST GUARD SHIPS 2021

PART I － CLASSIFICATION AND SURVEY

August 2020

RULES FOR THE CONSTRUCTION AND CLASSIFICATION OF COAST GUARD SHIPS 2021

PART I CLASSIFICATION AND SURVEY

CONTENTS

Chapter 1 Classification of Coast Guard Ships 1

1.1 General 1
1.2 Application 2
1.3 Classification Characters 3
1.4 Class Notations 4
1.5 Application for Classification and Surveys 5
1.6 Surveys of Ships 5
1.7 Approval 18
1.8 Certificates of Classification 18
1.9 Notice of Surveys 18
1.10 Suspension and Withdrawal of Class 19
1.11 Reclassification 20
1.12 Survey Fees and Expenses 20
1.13 International Conventions and Codes 20
1.14 Governmental Regulations 20
1.15 Sea Trials 21
1.16 Stability Experiment 21
1.17 Liability and Compensation 22

Chapter 2 Survey Requirements of Coast Guard Ships 30

2.1 General 30
2.2 Bottom Surveys 35
2.3 Surveys of Propeller Shafts and Tube Shafts 38
2.4 Boiler Survey and Thermal Oil Heater Surveys 43
2.5 Annual Surveys 44
2.6 Intermediate Surveys 47
2.7 Special Surveys 48
2.8 Classification Survey of Ships not Built under Survey 53
2.9 Hull Surveys of Ships for FRP and Aluminum Alloys Construction 54

Appendix 1 Guidance for Inclining Test 61

A1.1 General 61
A1.2 Preparation for the Test 61
A1.3 Inclining Test and Record of Data 63
A1.4 Postponement of the Test 64
A1.5 Inclining Test Report 64

Appendix 2 Load Line Markings 65

A2.1 Load Line Markings 65

Chapter 1

Classification of Coast Guard Ships

1.1 General

1.1.1 Coast Guard Ships built and surveyed in accordance with the Rules for the Construction and Classification of Coast Guard Ships (hereinafter referred to as the Rules) published by the CR Classification Society (hereinafter referred to as the Society) or alternatives found to represent an overall safety standard equivalent to that of the Rules (See 1.1.6 of this Part) will be assigned a class in the Register of Ships (hereinafter referred to as the Register) and will continue to be classed so long as they are found, upon examination at the prescribed surveys, to be maintained in a fit and efficient condition and in accordance with the requirements of the Rules.

(a) For the ships constructed of steel, aluminum, or FRP and having $V/\sqrt{L}$ not less than 2.36 where L is as defined in 1.1.2 of Part III and V is as defined in 1.1.18 of Part III, the requirements for hull construction specified in Part III of the Rules are to be applied. Applicable ship types and length are as follows:

Application Limits:	
Ship Type	Applicable Length
Mono-hull	< 130 m
Multi-hull	< 100 m
Surface Effects Ship (SES)	< 90 m
Hydrofoil	< 60 m

Ships which have lengths that are in excess of the above table may be classed using the requirements in the Rules for HSC, as applicable, providing that requirements in 2.1 and 2.2.1(a)(iii) of Part III of the Rules for HSC are verified by theoretical prediction, first principles analysis, and model testing.

Where direct analyses are required, the requirements specified in 1.1.19 of Part I of the Rules for HSC are applicable.

(b) For the ships having $V/\sqrt{L}$ less than 2.36, the requirements of Hull Construction and Equipment specified in Part II of the Rules are to be applied.

(c) The requirements of Material and Welding are as specified in Part XI and XII of the Rules for Steel Ships.

1.1.2 Classification will be conditional upon compliance with the Rules in respect of both hull and machinery (i.e., main and auxiliary engines, boilers, essential appliances, pumping arrangements and electrical equipment). The products including the equipment, components, systems and materials intended for classed ship or ship to be classed are to comply with the requirments in "Guidelines for Survey of Product for Marine Use".

1.1.3 The Rules are framed on the understanding that ships will be properly loaded and handled; they do not, unless stated in the class notation, provide for special distributions or concentrations of loading. The Society may also require additional strengthening to be fitted in any ship which, in their opinion, may be subjected to severe stresses due to particular features in her design, or when it is desired to make provisions for exceptionally loaded or ballasted conditions. In these cases particulars are to be submitted for consideration.

1.1.4 The stability of the ship is to be sufficient and in compliance with the requirements of governmental authority or International Conventions and Codes and Part II Chapter 30 and 30A of the Rules for Steel Ships, as applicable.

1.1.5 The Rules do not cover certain technical characteristics, such as trim, hull vibration, etc., but the Society is willing to advise on such matters although it cannot assume responsibility for them.

1.1.6 Alternatives are to be accepted, provided that they are considered by the Society to be equivalent to the Rules.

1.1.7 Ships construction of which involves novel features of design in respect of hull, machinery or equipment and to which the provisions of the Rules are not directly applicable may be classed, when approved by the Society on the

basis that the Rules insofar as applicable have been complied with and that special consideration based on the best information available at the time has been given to the novel features. The Rules are framed on the understanding that ships are not to be operated in environmental conditions more than those agreed for the design basis and approval, without the prior agreement of the Society.

1.1.8 Register

Ships with their class approved by the Society are to be recorded in the Register. The Register is to be published on the CR website and is to contain the names of ships and other useful items of information such as flag, port of registry, gross tonnage, class notations, owners, shipbuilders, dimensions, machinery particulars, the date of build, etc.

1.1.9 Date of build

(a) The date of build is normally to be the date of completion of the classification initial survey during construction of ship built under the inspection.

(b) If the period between launching and completion or putting a ship to use is unduly made longer than usual, the date of launching may be additionally indicated in the Register.

(c) If a ship is not immediately put into service after completion, but is laid up for a period, the ship is to be drydocked for examination by the Surveyor of the Society (hereinafter referred to as the Surveyor) before proceeding to sea, and the subsequent Special Survey is based on the date of such an examination provided that the result of such survey is satisfactory in all respects.

1.1.10 Damage, repairs and alternations

Any damage, defect, breakdown or grounding, which could invalidate the conditions for which a class has been assigned, is to be reported to the Society without delay.

1.1.11 For ships, the arrangements and equipment of which are required to comply with the requirements of the International Convention and applicable Protocols and Amendments relating thereto, such compliance is to be demonstrated by possession of applicable Convention Certificates issued by the Government of the State whose flag the ships is flying (hereinafter refer to as the Administration) or by any organization authorized by the Administration.

1.1.12 For ships not engaged in international voyages are to comply with the relevant regulations of the Administration.

1.1.13 Where an on-board computer system having either a longitudinal strength or a stability computation capability or both, is provided on new ship, or newly installed on existing ship, then the system is to be certified for such use in accordance with the Society's procedure for approval of on-board computer systems for stability calculation (Refer to Appendix 1 of Part I of the Rules for Steel Ships).

1.1.14 When longitudinal strength calculations have been required, loading guidance information is supplied to the Master by means of a Loading Manual and in addition, when required, by means of loading instrument.

1.1.15 For all ships, new installation of materials which contain asbestos is to be prohibited.

1.1.16 Ships of length less than 24 meters may be designed and constructed in accordance with other recognized standards, e.g. ISO standards provided the agreement is issued by the Society.

1.1.17 In general, while references are made to IACS URs (Unified Requirements), the latest version of the documents are to be used.

1.2 Application

The Society has the power to adopt, and publish as deemed necessary, Rules relating to classification and has (in relation thereto) provided the following:

1.2.1 Except in the case of a special directive by the Society, no new Regulation or alteration to any existing Regulation relating to classification character or to class notation is to be applied to existing ships.

1.2.2 Except in the case of a special directive by the Society, or where changes necessitated by mandatory implementation of International Conventions and Codes, no new Rule or alteration in any existing Rules is to be applied compulsorily after the date on which the contract between the shipbuilder and shipowner for construction of the ship has been signed, nor within 6 months of its adoption, nor after the approval of the original midship section or equivalent structural plans. The date of "contract for construction" of a ship is the date on which the contract to build the ship is signed between the prospective shipowner and the shipbuilder. This date and the construction number (i.e. hull numbers) of all the ships included in the contract are to be declared by the party applying for the assignment of class to a newbuilding. The date of "contract for construction" of a series of sister ship, including specified optional ship for which the option is ultimately exercised, is the date on which the contract to build the series is signed between the prospective shipowner and the shipbuilder. In this section a "series of sister ship" is a series of ship built to the same approved plans for classification purposes, under a single contract for construction. The optional ship will be considered part of the same series of sister ship if the option is exercised not later than 1 year after the contract to build the series was signed. If a contract for construction is later amended to include additional ships or additional options, the date of "contract for construction" for such ships is the date on which the amendment to the contract is signed between the prospective shipowner and the shipbuilder. The amendment to the contract is to be considered as a "new contract". If a contract for construction is amended to change the ships type, the date of "contract for construction" of this modified ship, or ships, is the date on which the revised contract or new contract is signed between the Owner, or Owners, and the shipbuilder. Where it is desired to use existing approved ship or machinery plans for a new contract, written application is to be made to the Society. Sister ship may have minor design alterations provided that such alterations do not affect matters related to classification, or if the alterations are subject to classification requirements, these alterations are to comply with the classification requirements in effect on the date on which the alterations are contracted between the prospective owner and the shipbuilder or, in the absence of the alteration contract, comply with the classification requirements in effect on the date on which the alterations are submitted to the Society for approval. Recognising the long time period that may occur between the initial design contract and the contract for construction for offshore units for fixed locations, the date determining effective classification requirements will be specially considered by the Society in such cases.

1.2.3 Information contained in the reports of classification and statutory surveys will be made available to the relevant owner, National Administration, Port State Administration, P&I Club, hull underwriter and, if authorised in writing by that owner, to any other person or organisation.

1.2.4 Information relating to the status of classification and statutory surveys and suspensions/withdrawals of class together with any associated conditions of class will be made available as required by applicable legislation or court order.

1.3 Classification Characters

1.3.1 All ships, when classed, will be assigned following classification characters as applicable.

1.3.2 Classification symbols

(a) **CR100** —This class is to be assigned to the ship's hull which in all their parts complies with the Rules for the draught required.

(b) **CMS** —This class is to be assigned to the machinery including propelling and essential auxiliary machinery and all other equipment covered by the classification which complies with the Rules.

(c) The symbol **CMS** will be added concurrently to a ship assigned with **CR100**.

1.3.3 Surveying symbols

(a) ✠ This symbol when affixed to classification symbols means the plans of ship have been approved by the Society in accordance with the Rules, and the ship has been built to the satisfaction of the Surveyor to the Society.

(b) ✠ This symbol is to be assigned to the ship has not been built under the survey of the Society but has been constructed under the survey of a recognized society. In addition, the whole of hull and machinery will be required to have been installed and tested to the satisfaction of the Surveyor to the Society in accordance with the Rules of the Society.

(c) No surveying symbol are to be assigned to the hull and machinery of any ship not having been surveyed during construction by either the Society or any other recognized party but the existing installation and arrangement has been examined and tested and found to be acceptable to the Society.

1.3.4 Equipment symbols

The letter **E** which is affixed to surveying symbols of hull means the equipment including anchors, chain cables and hawsers of new or existing ships is supplied and maintained in accordance with the full requirements of the Rules, or partial requirements under special approval. In the case of a ship classed for a special or restricted service, if approved by the Society that requirements of the Rules are not necessary to apply, no equipment symbol is to be affixed.

1.3.5 Automation symbols

A symbol, which is to be round-bracketed and be affixed next to the classification symbol **CMS**, indicating that an automatic or remote control and monitoring system for propulsion machinery, propulsion machinery spaces, etc. is provided and relevant requirements of the Rules are complied with. See Table I 1-1.

1.4 Class Notations

1.4.1 General

(a) When considered necessary by the Committee, or when requested by an Owner and agreed by the Committee, a class notation will be appended to classification character assigned to the ship. This class notation will consist of one of, or a combination of, the notations listed in 1.4.2 to 1.4.5. The classification characters and class notations assigned to a ship are indicated on the Certificate of Classification as well as in the Register of Ship published by the Society.

(b) The notations for type of ships, service restriction, feature, cargo, equipment, additional survey, etc. are added after the classification symbol **CR100**. The automation symbol and notations for navigation safety system, special equipment of machinery, machinery survey, etc. are added after the classification symbol **CMS**.

(c) Where a class notation assigned to a specific ship together with classification characters is required by the Rules to which the ship is subject, such notation is a necessary one for this ship, otherwise an optional one.

(d) Every 2 sets of class notations are to be separated by a comma ",", e.g.:

CR100 ✠ E Aluminum Alloy Hull, ……

CMS(CAU)✠ PCM, ……

Unless specially stated otherwise, class notations are generally given in the following sequence.

(e) The notations not covered by the Rules are to comply with the applicable requirements of Part I of the Rules for Steel Ships.

1.4.2 Hull structural material notation

A notation indicating that the ship uses materials other than steel as the structural materials for the main hull, e.g. **FRP Hull, Aluminum Alloy Hull** etc.

1.4.3 Ship type notation, special duty or purpose notation, additional service notation, hull construction notation and service restriction notation.

(a) Ship type notation

A notation indicating that the ship has been arranged and constructed in compliance with particular usage intended to apply to that type of ship. See Table I 1-2 of the Rules for Steel Ships, if any.

(b) Special duties or purpose notation

(i) A notation indicating that the ship has been designed, modified or arranged for special service other than those implied by the type, e.g. **Special Government Services**, **Patrol Vessel**, **Patrol Boat** etc. Ship with special purpose notations are not thereby prevented from performing any other duties for which they may be suitable.

(c) Additional service notation

A type notation and/or a special duty notation may be completed by one or more additional service notations. The specific rule requirements applicable to each service notation are to be complied with. See Table I 1-2.

(d) Hull construction notation

For ships with hull construction other than monohull, such as catamaran, trimaran, small waterplane area twin hull (SWATH) and etc., the hull construction of ship is in compliance with relevant requirements of the Rules or the requirements agreed by the Society, the hull construction notation of **Catamaran**, **Trimaran**, or **SWATH** will be affixed after the ship type notation.

1.4.4 Service restriction notation

A notation indicating that the ship has been classed on the understanding that it will be operated only in suitable areas or conditions which have been agreed by the Committee. See Table I 1-3.

1.4.5 Additional Class Notation

A notation expressing the classification of equipment or specific arrangement, which has been requested by the Owner.

(a) Special features notation.

A notation indicating that the ship incorporates special features which significantly affect the design, e.g. **Hydrofoil Ship**.

(b) Additional survey notation.

A notation indicating that one or more Special Surveys are adopted and relevant requirements of the Rules are complied with. See Table I 1-4.

(c) Special equipment notation

A notation indicating that a high holding anchor is provided and relevant requirements of the Rules are complied with. See Table I 1-5.

(d) Navigation safety notation.

A notation indicating that a navigational safety system is provided and relevant requirements of the Rules are complied with. See Table I 1-6.

(e) Environmental protection notation

A notation indicating that an environmental protection is provided and relevant requirements of the Rules are complied with. See Table I 1-7.

1.5 Application for Classification and Surveys

1.5.1 An application for the classification of ship is to be submitted in writing or typing by e-mail or fax by the builder for a ship to be built under the Society's survey or by the owner for a ship not built under the Society's survey.

1.5.2 An application for surveys for maintenance of class is to be submitted in writing or typing by e-mail or fax by the owner or owner's representative.

1.6 Surveys of Ships

1.6.1 General

(a) All ships classed with the Society are subjected to the following periodical surveys:

(i) Annual surveys.

(ii) Bottom surveys.

(iii) Intermediate surveys.

(iv) Special Surveys.

(v) Boiler surveys and thermal oil heater surveys.

(vi) Propeller shaft and tube shaft surveys.

(b) The contents of surveys by the Society are detailed in the "Survey Requirements of Ship" in Chapter 2 of this Part.

(c) Special consideration may be given to any unusual circumstances justifying a modification of either survey requirements or the interval of surveys. The Society may make special requirements including intervals of periodical surveys to coincide with the regulations of the flag state of ships if owner requests.

(d) Statutory survey will be acted by the Society, when authorized on behalf of Governments, in respect of National and International statutory safety.

(e) Survey planning meeting (Kick-off meeting) is to be held prior to the commencement of the intermediate survey and Special Survey.

1.6.2 Classification Initial Survey during construction

(a) New ships are to be built in accordance with the Rules. The constructional plans and particulars of the hull, equipment and machinery, together with their drawing list, are to be submitted for approval of the Society before the work is commenced. In case these plans need to be modified or altered, a re-approval is indispensable.

(b) The new machinery including boilers, pressure vessels and electrical equipment for ships classed or intended to be classed is to be manufactured under and surveyed according to the Rules.

(c) From the commencement of the work until the completion of the ships and final test of the machinery under working condition, the Surveyors are to be satisfied that the materials, workmanship and arrangements are satisfactory and in accordance with the Rules or the approved plans, or any material, workmanship or arrangement found to be unsatisfactory, it is to be rectified.

(d) The materials used in the construction of hulls and machinery intended for classification are to be of good quality and free defects and are to be tested in accordance with the requirements of Part II of the Rules and Part XI of the Rules for Steel Ships. The steel is to be manufactured by an approved process at works recognized by the Society. Alternatively, tests to the satisfaction of the Society will be required to demonstrate the suitability of the steel.

(e) Copies of finish plans (showing the ships as built), essential Certificates and records, required loading and other instruction manuals are to be readily available for use when required by the Surveyor, and may be required to be kept on board.

(f) Hull Survey for New Construction

(i) Qualification and Monitoring of Personnel

Exclusive Surveyors of the Society are to confirm through patrol, review and witness that the ships are built using approved plans in accordance with the relevant rules and statutory requirements. The Surveyors are to be qualified to be able to carry out the tasks and procedures are to be in place to ensure that their activities are monitored through the QM of the Society.

(ii) Survey of the hull structure

IACS UR Z23 Table 1 provides a list of surveyable items for the hull structure and coating and is applicable to the Society including:

(1) Description of the shipbuilding functions;

(2) Classification and statutory survey requirements;

(3) Survey method required for classification;

(4) Relevant IACS and statutory requirement references;

(5) Documentation to be available for the Surveyor during construction.

a) The shipbuilder is to provide the Surveyors access to documentation required by classification, this includes documentation retained by the shipbuilder or other third parties.

b) The list of documents approved or reviewed by the Society for the specific new construction are as follows:

- plans and supporting documents
- examination and testing plans
- nondestructive testing (NDT) plans
- welding consumable details
- welding procedure specifications
- welding plan or details
- welder's qualification records
- NDT operator's qualification records

(6) Documents to be inserted into the ship construction file.

(7) A list of specific activities which are relevant to the shipbuilding functions. This list is not exhaustive and can be modified to reflect the construction facilities or specific ship type.

(8) Evidence is also to be made available, as required, by the shipbuilder, to the Surveyor whilst the construction process proceeds to prove that the material and equipment supplied to the ship has been built or manufactured under survey relevant to the classification rules and statutory requirements.

(iii) Newbuilding survey planning

Prior to commencement of surveys for any newbuilding project, a kick off meeting shall be carried out.

A record of the meeting is to be made. The records are to take note of specific published Administration requirements and interpretations of statutory requirements. The shipyard shall be requested to advise of any changes to the activities agreed at the kick off meeting and these are to be documented. Shipbuilding quality standards for the hull structure during new construction are to be reviewed and agreed during the kick-off meeting. Structural fabrication is to be carried out in accordance with IACS Recommendation 47, "Shipbuilding and Repair Quality Standard", or a recognized fabrication standard which has been accepted by the Society prior to the commencement of fabrication/construction. The work is to be carried out in accordance with the Rules and under survey of the Society. In the event of series ship production consideration may be given to waiving the requirement for a kick off meeting for the second and subsequent ships.

(iv) Examination and test plan for newbuilding activities. The shipbuilder is to provide plans of the items which are intended to be examined and tested. These plans need not be submitted for approval and examination at the time of the kick off meeting, but the plans and any modifications to them are to be submitted to the Surveyors in sufficient time to allow review before the relevant survey activity commences. They are to include:

(1) Proposals for the examination of completed steelwork - generally referred to as the block plan and are to include details of joining blocks together at the pre-erection and erection stages or at other relevant stages;

(2) Proposals for fit up examinations where necessary;

(3) Proposals for testing of the structure (leak and hydrostatic) as well as for all watertight and weathertight closing appliances;

(4) Proposals for non-destructive examination;

(5) Any other proposals specific to the ship type or to the statutory requirements.

(v) Ship Construction File

(1) The shipbuilder is to deliver documents for the Ship Construction File. In the event that items have been provided by another party such as the shipowner and where separate arrangements

have been made for document delivery which excludes the shipbuilder, that party has the responsibility. The Ship Construction File shall be reviewed for content.

(2) Ship Construction File on board the ship, is to facilitate inspection (survey) and repair and maintenance, shall include in addition to documents listed in IACS Z23 Table 1, but not be limited to:

- As-built structural drawings including scantling details, material details, and, as applicable, wastage allowances, location of butts and seams, cross section details and locations of all partial and full penetration welds, areas identified for close attention and rudders;
- Manuals required for classification and statutory requirements, e.g. loading and stability, bow doors and inner doors and side shell doors and stern doors – operations and maintenance manuals (IACS S8 and S9);
- Ship structure access manual, as applicable;
- Copies of certificates of forgings and castings welded into the hull (IACS W7 and W8);
- Details of equipment forming part of the watertight and weathertight integrity of the ship;
- Tank testing plan including details of the test requirements (IACS S14);
- Corrosion protection specifications (IACS Z8 and Z9);
- Details for the In-Water Survey, if applicable, information for divers, clearances measurements instructions etc., tank and compartment boundaries;
- Docking plan and details of all penetrations normally examined at drydocking;

(vi) Review of the construction facility

The Society is to familiarize themselves with the yard's production facilities, management processes, and safety for consideration in complying with the requirements of Table 1 of IACS UR Z23 prior to any steelwork or construction taking place in the following circumstances:

(1) where the Society has none or no recent experience of the construction facilities – typically after a one year lapse - or when significant new infrastructure has been added;

(2) where there has been a significant management or personnel re-structuring having an impact on the ship construction process;

(3) or where the shipbuilder contracts to construct a ship of a different type or substantially different in design.

1.6.3 Classification survey of ship not built under survey

Ships which have not been built under survey to the Society, but which are submitted for classification, are to be subjected to a classification survey of ships not built under survey (See 2.8 of this Part). Survey planning meeting (Kick-off meeting) is to be held prior to the commencement of the survey.

1.6.4 Special Survey

(a) Survey intervals

The Special Survey is to be subjected to surveys at the fixed intervals not exceeding 5 years. Special Surveys are normally to be effected in the sequences of :

No.1 - for ships up to 5 years old.

No.2 - for ships between 5-10 years old.

No.3 - for ships between 10-15 years old.

No.4 & subsequent - for ships age > 15 years old.

(b) Commencement of Special Survey

(i) The Special Survey may be commenced at the 4th annual survey and be progressed with a view to completion by the 5th anniversary date.

(ii) As part of the preparation for the Special Survey, the thickness measurement held and survey plan are to be dealt with in advance of the Special Survey. However, the thickness measurement held before the 4th annual survey cannot be credited as a part of Special Survey.

(c) Premature of Special Survey

(i) If a Special Survey is completed prematurely but within 3 months prior to the due date, the due date of the next Special Survey is based upon a date not exceeding 5 years from the due date of the existing Special Survey. If a Special Survey is completed more than 3 months prior to the due date, the due date of the next Special Survey is based upon a date not exceeding 5 years from the date of completing of the Special Survey.

(ii) Where a Special Survey is commenced more than 15 months prior to the due date, the entire survey is normally to be completed within 15 months, if such work is to be credited to the Special Survey. Survey is based upon a date not exceeding 5 years from the date of completion of the Special Survey.

(d) Extension of Special Surveys

(i) If a ship at the time when the Special Survey is due but not in a port in which it is to be surveyed, the Society may upon the Owner's written request in advance in each case extend a period not exceeding 3 months. Such extension is, however, only to be granted for allowing the ship to complete its voyage to the port in which it is to be surveyed, and only in cases where it is considered proper and reasonable to do so.

(ii) If a Special Survey is completed after the due date, the due date of the next Special Survey is based upon a date not exceeding 5 years from the due date of the existing Special Survey.

(iii) A maximum 3 months extension of Special Survey beyond the due date may be granted provided an occasional survey has been carried out satisfactorily based on a scope of annual survey and the additional items considered by the Head Office of the Society.

(e) If a Special Survey has been completed and a new final certificate can't be issued or placed on board the ship before the expiry date of the existing certificate, the attending Surveyor authorized by the Society may endorse the existing certificate and such a certificate is to be accepted as valid for a further period which is not to exceed 6 months from the expiry date.

(f) Continuous survey

(i) At the request of the owner, and upon approval of the proposed arrangement, a system of continuous surveys for hull, machinery and cargo refrigerating machinery appliances, may be undertaken, except for hull surveys of tankers, bulk carriers and similar types of ship, where-by the Special Survey requirements are carried out in regular cycle to complete all the requirements of the particular Special Survey within a 5-year period. If the continuous survey is completed beyond the 5-year period, the completion date is to be recorded to agree with the original due date of the cycle. If the continuous survey is completed prematurely but within 3 months prior to the due date, the Special Survey is to be credited to agree with the effective due date. The continuous survey can, also be adopted respectively for the hull, the machinery including the electrical equipment and the refrigerated cargo installations.

(ii) Where some items of the machinery are opened up and examined by the recognized chief engineer as normal routine for maintenance at ports where the Surveyor is not available or at sea, the open-up inspection of the items, at the request of Owner, under certain conditions, may be dispensed with at the discretion of the Surveyor subject to a confirmatory survey at the convenient port of call where the Surveyor is available. The confirmatory survey is to be carried out within 5 months from the date of the item of the machinery which was opened up and inspected by the recognized chief engineer. If deemed necessary by the Surveyor, the individual item may be inspected again.

(iii) All items stipulated in 2.7.1 except thickness measurement are covered by a system of continuous survey for hull. The thickness measurement for the ship which adopts a system of continuous survey for hull conducted before the 4th annual survey cannot be credited for the Special Survey.

(g) Planned Maintenance Scheme (PMS) for machinery

(i) Application

(1) These requirements apply to an approved Planned Maintenance Scheme for Machinery (PMS) as an alternative to the Machinery Continuous Survey (MCS) (see 1.6.4(f) above)

(2) It considers surveys to be carried out on the basis of intervals between overhauls recommended by manufacturers, documented operator's experience and a condition monitoring system, where fitted.

(3) This scheme is limited to components and systems covered by MCS.

(4) Any items not covered by PMS shall be surveyed and credited in the usual way.

(ii) Maintenance intervals

In general, the intervals for PMS shall not exceed those specified for MCS. However, for components where the maintenance is based on running hours longer intervals may be accepted as long as the intervals are based on the manufacturer’s recommendations.

(iii) Onboard responsibility

(1) The chief engineer shall be the responsible person on board in charge of the PMS.

(2) Documentation on overhauls of items covered by the PMS shall be reported and signed by the chief engineer.

(3) Access to computerized systems for updating of the maintenance documentation and maintenance program shall only be permitted by the chief engineer or other authorized person.

(iv) Procedures and conditions for approval of a PMS

(1) System requirements

a) The PMS shall be programmed and maintained by a computerized system. However, this may not be applied to the current already approved schemes.

b) The system shall be approved in accordance with a procedure of the Society.

c) Computerized systems shall include back-up devices, such as disks, tapes, or CDs, which are to be updated at regular intervals.

(2) Documentation and information

The following documentation shall be submitted for the approval of the scheme:

a) organization chart identifying areas of responsibility.

b) documentation filling procedures.

c) listing of equipment to be considered by classification in PMS.

d) machinery identification procedure.

e) preventive maintenance sheet(s) for each machine to be considered.

f) listing and schedule of preventive maintenance procedures.

(3) In addition to the above documentation the following information shall be available on board:

a) all clauses in (2) above, in an up-to-date fashion.

b) maintenance instructions (manufacturer's and shipyard's).

c) reference documentation (trend investigation procedures etc.).

d) records of maintenance including repairs and renewals carried out.

(v) Approval validity

(1) When the PMS is approved, the notation **PMS** will be assigned to the ship.

(2) An implementation survey shall be carried out to confirm the validity of the notation **PMS** (see 1.6.4(g)(vi)).

(3) An annual report covering the year's service, including the information as required under the clauses 1.6.4(g)(iv)(2)c) and e) as well as the information on changes to other clauses in 1.6.4(g)(iv)(2), shall be reviewed by the Society.

(4) An Annual Audit shall be carried out to maintain the validity of the PMS (see 1.6.4(g)(vii))

(5) The survey arrangement for machinery under PMS can be cancelled by the Society if PMS is not being satisfactorily carried out either from the maintenance records or the general condition of the machinery, or when the agreed intervals between overhauls are exceeded.

(6) The case of sale or change of management of the ship or transfer of class shall cause the approval to be reconsidered.

(7) The shipowner may, at any time, cancel the survey arrangement for machinery under PMS by informing the Society in writing and for this case the items which have been inspected under the PMS since the last annual survey can be credited for class at the discretion of the attending Surveyor.

(vi) Implementation Survey

(1) The Implementation Survey shall be carried out by the Surveyor within one year from the date of approval of the PMS.

(2) During the Implementation Survey the following shall be verified by the Surveyor to ensure:

a) the PMS is implemented according to the approval documentation and is adapted to the type and complexity of the components/system on board.

b) the PMS is producing the documentation required for the Annual Audit and the requirements of surveys and testing for retention of class are complied with.

c) the onboard personnel is familiar with the PMS.

(3) When this survey is carried out and the implementation is found in order, a report describing the PMS shall be submitted to the Society and the approved PMS may replace the MCS.

(vii) Annual Audit*

(1) An Annual Audit of the PMS shall be carried out by the Surveyor and preferably concurrently with the annual survey of machinery.

(2) The Surveyor shall review the annual report or verify that it has been reviewed by the Society.

(3) The purpose of this survey shall be to verify that the scheme is being correctly operated and that the machinery has been functioning satisfactorily since the previous survey. A general examination of the items concerned shall be carried out.

(4) The performance and maintenance records shall be examined to verify that the machinery has functioned satisfactorily since the previous survey or action has been taken in response to machinery operating parameters exceeding acceptable tolerances and the overhaul intervals have been maintained.

(5) Written details of break-down or malfunction shall be made available.

(6) Description of repairs carried out shall be examined. Any machinery part, which has been replaced by a spare one, due to damage, is to be retained on board, where possible, until examined by the Surveyor.

(7) Upon satisfactory completion of the above requirements, the Society shall retain the PMS.

Note: * The term audit, in this context, is not related to ISM audit.

(viii) Damage and repairs

(1) The damage of components/machinery shall be reported to the Society. The repairs of such damaged components/machinery shall be carried out to the satisfaction of the Surveyor.

(2) Any repair and corrective action regarding machinery under PMS system shall be recorded in the PMS logbook and repair verified by the Surveyor at the Annual Audit.

(3) In the case of overdue outstanding recommendations or a record of unrepaired damage which would affect the PMS the relevant items shall be kept out of the PMS until the recommendation is fulfilled or the repair is carried out.

(ix) Planned Maintenance (PM)

Owners may conduct Planned Maintenance on any item(s) of equipment. However, the following equipment cannot be enrolled into the PMS and credit will not be given towards periodic surveys.

(1) System piping (All).

(2) Valves (All).

(3) Sea chests.

(4) All operational tests.

(5) Fire pumps.

(6) Fire fighting equipment.

(7) All safety devices, trips and relief valves.

(8) Air receivers with associated relief valves and safety devices.

(9) Heat exchangers and unfired pressure vessels with design pressures over 6.9 bar and associated relief valves.

(10) Steering gear piping, pumps and control/relief valves.

(11) Steam turbines.

(x) Open-up survey

The following machinery is, in principle, to be opened and examined in the attendance of the Surveyor in accordance with the survey schedule table.

(1) Crankpins and bearings, crank-journals and bearings, and crosshead bearings for main diesel engines.

(2) Rotors, blades, casings, main bearings, couplings between turbine and reduction gear, nozzle valves and maneuvering valves for main steam turbine.

(3) Aux. steam turbine for main generator.

(4) Thrust shaft and bearings for main propulsion.

(5) Reduction gear for main propulsion.

(6) Flexible coupling for main propulsion.

(7) Other items deemed necessary by the Society.

(xi) For engine with bore 300 mm or under of the non-ocean going ships, special consideration may be given to modify the above PMS requirements based on the manufacturer's recommendation of maintenance manual.

(h) Condition Monitoring and Condition Based Maintenance Schemes

(i) Application

(1) These requirements apply to the approved Condition Monitoring (CM) and Condition Based Maintenance (CBM) schemes where the condition monitoring results are used to influence the scope and/or frequency of Class survey.

(2) This scheme may be applied to components and systems covered by Machinery Continuous Survey (MCS), and other components and systems as requested by the owner. The extent of Condition Based Maintenance and associated monitoring equipment to be included in the maintenance scheme is decided by the Owner.

(3) These requirements can be applied only to ships operating on approved PMS survey scheme.

(4) The scheme may be applied to any individual items and systems. Any items not covered by the scheme shall be surveyed and credited in accordance with the requirements of 2.7.2 and / or 1.6.4(g) of this Part.

(ii) Definitions

The following standard terms are defined in ISO 13372:2012:

(1) Condition monitoring: acquisition and processing of information and data that indicate the state of a machine over time. The machine state deteriorates if faults or failures occur.

(2) Diagnostic: examination of symptoms and syndromes to determine the nature of faults or failures.

(3) Condition Based Maintenance: maintenance performed as governed by condition monitoring programmes.

(iii) Condition Monitoring (CM)

(1) Where an approved condition monitoring system is fitted, credit for survey may be based on acceptable condition monitoring results. The condition monitoring results are to be reviewed during the annual audit.

(2) Limiting parameters are to be based on the Original Equipment Manufacturers guidelines (OEM), or a recognised international standard.

(3) The condition monitoring system is to provide an equivalent or greater degree of confidence in the condition of the machinery to traditional survey techniques.

(4) The condition monitoring system shall be approved in accordance with the Society's procedures.

(5) A condition monitoring system may be used to provide a greater understanding of equipment condition, and a condition based maintenance scheme may be used to obtain maintenance efficiency. Class approval is required where owners wish to change the survey cycle based on CM/CBM.

(6) Software systems can use complex algorithms, machine learning and knowledge of global equipment populations/defect data in order to identify acceptability for continued service or the requirement for maintenance. These systems may be independent of the OEM recommended maintenance and condition monitoring suggested limits. Approval of this type of software is to be based on OEM recommendations, industry standards and experience of the Society.

(7) The Society retains the right to test or open-up the machinery, irrespective of the CM results, if deemed necessary.

(iv) Condition Based Maintenance (CBM)

(1) Where an owner wishes to base their equipment maintenance on a CBM approach, this is to meet the requirements of the ISM Code.

(2) Where an agreed planned maintenance and CBM scheme is in operation, the MCS and other survey intervals may be extended based on OEM maintenance recommendations and acceptable condition monitoring results.

(3) Limiting parameters (alarms and warnings) are to be based on the OEM guidelines, or a recognised international standard.

(4) The CBM scheme is to provide an equivalent or greater degree of confidence in the condition of the machinery to traditional maintenance techniques.

(5) The scheme shall be approved in accordance with the Society's procedures.

(6) Software systems can use complex algorithms, machine learning and knowledge of global equipment populations/defect data in order to identify acceptability for continued service or the requirement for maintenance. These systems may be independent of the OEM recommended maintenance and condition monitoring suggested limits. Approval of this type of software is to be based on OEM recommendations, industry standards and experience of the Society.

(v) Procedures and Conditions for approval of CM and CBM

(1) Onboard Responsibility

a) The chief engineer shall be the responsible person on board in charge of the CM and CBM.

b) Documentation on the overhaul of items covered by CM and CBM schemes shall be reported by the chief engineer.

c) Access to computerized systems for updating of the maintenance documentation and maintenance program shall only be permitted by the chief engineer or other authorized person.

d) All personnel involved in CM and CBM shall be appropriately qualified.

Note: CM does not replace routine surveillance or the chief engineer's responsibility for taking decisions in accordance with his judgement.

(2) Equipment and System Requirements

a) CM equipment and systems shall be approved in accordance with a procedure of the Society.

b) The CM/CBM scheme and its extent, are to be approved by the Society.

c) The CBM scheme is to be capable of producing a condition report, and maintenance recommendations.

d) A system is to be provided to identify where limiting parameters (alarms and warnings) are modified during the operation of the scheme.

e) Where CM and CBM schemes use remote monitoring and diagnosis (i.e. data is transferred from the ship and analysed remotely), the system is to meet the applicable standards for Cyber Safety and Security. The system shall be capable of continued onboard operation in the event of loss of the communication function.

f) CBM schemes are to identify defects and unexpected failures that were not prevented by the CM system.

g) Systems shall include a method of backing up data at regular intervals.

(3) Documentation and Information

a) The following documentation shall be made available to the Society for the approval of the scheme:

i) Procedure for changes to software system and CM parameters

ii) Listing of equipment to be included in the scheme

iii) Listing of acceptable condition monitoring parameters

iv) Description of CBM scheme

v) Listing, specifications and maintenance procedures for condition monitoring equipment

vi) Baseline data for equipment with condition monitoring

vii) Qualification of personnel and company responsible for analysing CM results

b) In addition to the above documentation the following information shall be available on board:

i) All clauses in a) above in an up-to-date fashion

ii) Maintenance instructions (manufacturer's and shipyard's)

iii) Condition monitoring data including all data since last opening of the machine and the original base line data

iv) Reference documentation (trend investigation procedures etc.)

v) Records of maintenance including repairs and renewals carried out

vi) Records of changes to software systems and parameters

vii) Sensors calibration records / certification / status

(4) Approval validity

a) An Annual Audit shall be carried out to maintain the validity of the CM/CBM scheme.

b) The survey arrangement for machinery under CM/CBM can be cancelled by the Society if the scheme is not being satisfactorily carried out either from the maintenance records or the general condition of the machinery.

c) The case of sale or change of management of the ship or transfer of class shall cause the approval to be reconsidered.

d) The shipowner may, at any time, cancel the survey arrangement for machinery under the scheme by informing the Society in writing and for this case the items which have been inspected under the scheme since the last annual Audit can be credited for class at the discretion of the attending surveyor.

(vi) Surveys

(1) Installation Survey

a) Condition monitoring equipment is to be installed and surveyed in accordance with the Rules of the Society, and a set of base line readings is to be taken.

(2) Implementation Survey

a) The Implementation Survey shall be carried out by the Society's surveyor no earlier than 6 months after installation survey and no later than the first Class annual survey.

b) During the Implementation Survey the following shall be verified by a surveyor:

i) the CM/CBM scheme is implemented according to the approval documentation, including a comparison with baseline data;

ii) the scheme is producing the documentation required for the Annual Audit and the requirements of surveys and testing for the maintenance of class are complied with;

iii) the onboard personnel are familiar with operating the scheme.

iv) records of any limiting parameters (alarms and warnings) that have been modified during the operation of the scheme.

v) Records of any failures of monitored equipment are to be reviewed to ensure that the condition monitoring scheme is effective / sufficient.

c) When this survey is carried out and the implementation is found in order, a report describing the scheme shall be submitted to the Society and the scheme may be put into service.

(3) Annual Audit

a) An annual audit of the CM and CBM scheme shall be carried out by the Surveyor concurrently with the Class annual survey.

b) The purpose of this audit shall be to verify that the scheme is being correctly operated and that the machinery has been functioning satisfactorily since the previous audit. This is to include any limiting parameters (alarms and warnings) that have been modified since the last audit. A general examination of the items concerned shall be carried out.

c) The performance, condition monitoring and maintenance records shall be examined to verify that the machinery has functioned satisfactorily since the previous survey, or action has been taken in response to machinery operating parameters exceeding acceptable tolerances.

d) Written details of break-down or malfunction shall be made available.

e) At the discretion of the surveyor, function tests, confirmatory surveys and random check readings, where Condition Monitoring / Condition Based Maintenance equipment is in use, shall be carried out as far as practicable and reasonable.

f) The familiarity of the chief engineer and other personnel involved with the CM system shall be verified.

g) Calibration status of sensors and equipment shall be verified.

h) Verification that the suitability of the CM/CBM scheme has been reviewed following defects and failures shall be carried out.

(4) Damage and repairs

a) Damage to components or items of machinery is to be reported to the Society. The repairs of such damaged components or items of machinery are to be carried out to the satisfaction of the Surveyor.

b) Details of repairs and maintenance carried out shall be examined. Any machinery part, which has been replaced by a spare one, due to damage, is to be retained on board where possible until examined by the Surveyor.

c) Defect and failure data is to be reviewed in order to ensure the system output is appropriate. Where necessary, following review of the failure data, there is to be a method of amending the CM and CBM scheme.

1.6.5 Annual Survey

(a) Annual Surveys are to be carried out within 3 months before or after each anniversary date of the date of the initial classification survey or the completion of the last Special Survey

(b) The anniversary date is to be changed if the annual survey is completed before the period specified in (a) of this subparagraph.

(i) The new anniversary date is to be amended by endorsement to a date which is not 3 months later than the date on which the survey was completed.

(ii) The subsequent annual survey is to be completed at the intervals prescribed as above using the new anniversary date.

(iii) The expiry date for a Special Survey may remain unchanged provided one or more annual surveys, as appropriate, are carried out so that the maximum intervals between the surveys prescribed are not exceed.

1.6.6 Intermediate Surveys

(a) Intermediate Surveys are to be carried out either at or between the 2nd or 3rd annual survey.

(b) Those items of the Intermediate Surveys which are additional to the requirements of the annual survey may be surveyed either at or between the 2nd or 3rd annual survey.

1.6.7 Bottom Survey

(a) Survey intervals

(i) There is to be a minimum of 2 examinations of the outside of the ship's bottom and related items during each 5 year Special Survey period. One such examination is to be carried out in conjunction with the Special Survey. In all cases the interval between any 2 such examinations is not to exceed 36 months.

For ships operating solely in fresh water, the maximum interval is not to exceed 5-years.

(ii) An extension of examination of the ship's bottom up to 3 months beyond the due date may be granted in exceptional circumstances provided an occasional survey has been carried out satisfactorily with the survey items required by the Head Office of the Society.

(b) In-Water Survey in lieu of Bottom Survey in dry dock

(i) An approved In-Water Survey equivalent to a docking survey may be considered as an alternative to a docking survey, subject to the provisions of 2.2.2 of this Part.

(ii) An In-Water Survey not credited as a Bottom Survey of the Special Survey may be carried out with the ship afloat.

(iii) Special consideration is to be given to ships of 15 years or over before being permitted to have such inspection.

(c) Bottom Survey at Special Survey

A Bottom Survey in dry dock is to be a part of the Special Survey

1.6.8 Survey of propeller shaft and tube shaft

(a) Survey intervals

(i) Water lubricated shafts (open systems)

The survey interval of water lubricated shafts (open systems) is in accordance with 2.3.2 of this Part.

(ii) Controllable pitch propellers for main propulsion purposes are to be surveyed at the same intervals as the propeller shaft.

(iii) Directional propellers for main propulsion purposes are to be surveyed at intervals not exceeding 5 years.

(iv) Water jet units for main propulsion purposes are to be surveyed at intervals not exceeding 5 years provided the impeller shafts are made of approved corrosion resistant material or have approved equivalent arrangements.

(v) Dynamic positioning and/or thruster-assisted mooring and athwartship thrust propellers and shaftings are to be surveyed at intervals not exceeding 5 years.

(vi) All other shafts not covered above, their normal survey interval is 3 years.

(b) Survey extensions for propeller shaft and tube shaft

An extension with specified period may be granted by the Society, when requested by the Owner, provided the extension survey is carried out to the satisfaction of the Surveyor.

(i) For oil lubricated shafts, the survey extensions are in accordance with 2.3.2(c)(ii) of this Part.

(ii) For closed loop system fresh water lubricated shafts, the survey extensions are in accordance with 2.3.2(d)(ii) of this Part.

(iii) For water lubricated shafts (open systems), the survey extensions are in accordance with 2.3.3(c)(ii) of this Part.

If the extension survey is carried out within one month of the shaft survey due date then the extension will take effect from the Shaft Survey due date.

If the extension survey is carried out more than 1 month prior to the Shaft Survey due date, then the period of extension will take effect from the date on which the extension survey was completed.

1.6.9 Auxiliary Boiler Surveys and Thermal Oil Heater Surveys

(a) Survey intervals

Auxiliary boilers or thermal oil heaters, waste heat steam generators/economizers having a working pressure exceeding 0.35 MPa and heating surface exceeding 4.5 m^2, a minimum of 2 surveys are to be carried out during each 5-year Special Survey period. One such survey is to be carried out in conjunction with the Special Survey. In all cases, the interval between any 2-such surveys is not to exceed 36 months. An extension of the survey up to 3 months may be granted by the Surveyor in exceptional circumstances(1), provided a survey is carried out in accordance with 2.4.1(i) of this Part. In addition, annual examinations are to be carried out in accordance with 2.4.1(h) of this Part.

Note: 1 "Exceptional circumstances" means, e.g., unavailability of repair facilities, unavailability of essential materials, equipment or spare parts, or delays incurred by action taken to avoid severe weather conditions

1.6.10 Occasional surveys

Occasional surveys are to be carried out when ships have sustained damage, undergone major repairs or alternations, or lay-up and re-commissioning.

(a) Damage, major repair or alternations

(i) The Society is to be immediately informed about any deficiencies and damages to hull and machinery or other equipment classed, where these may be of relevance to the ship's class. An occasional survey is to be arranged for a date not later than that ship's arrival at the next port. A ship may be temporarily repaired and retained her class if the Surveyor deems so and reports to the Society that the ship has been repaired to such a degree as being considered in a technical fitness condition for the intended voyage. In such cases a permanent repair and survey are to be duly carried out. If the survey reveals that a ship's class has been affected, the class is to be maintained only on condition that the repairs or modifications demanded by the Society are to be carried out within the period specified by the Surveyor. Until full settlement of recommendations the class is to be restricted.

(ii) In the case of alternations, plans are to be approved before the work is commenced.

(iii) If any part of the main or auxiliary machinery including boilers, or insulation or fittings, is removed for repair or alternation, the exposed part of the structure normally not accessible is to be specially examined.

(iv) In exceptional cases, the inspection of hull and machinery, and the performance of the repairs required for maintenance of the original class may be dispensed with, if the Owner agree to the class and/or the range of service being restricted, or possibly a higher freeboard being assigned.

(b) Lay-up and re-commissioning

(i) The Society is to be notified by the Owner that a ship has been laid up. Ships intended to be laid up are to comply with the requirements of "Guidelines for Lay-up of Ship" of the Society. This status is to be noted in the Register, and surveys falling due during lay-up may then be held in abeyance until the ship re-commissions. Lay-up procedures and arrangements for maintenance of conditions during lay-up may be submitted to the Society for review and verified on board by the Surveyor.

(ii) In the case of ships which have been laid up for an extended period (i.e. 6 months or more) the requirements for surveys on re-commissioning are to be specially considered in each case, due regard being given to the status of surveys at the time of the commencement of the lay-up period, the length of the period and the conditions under which the ship has been maintained during that period.

(iii) Where the lay-up preparations and procedures have been submitted to the Society for review and verified by annual lay-up surveys, consideration may be given to deducting part of or all of the time in lay-up from the progression of survey intervals.

(iv) For ships returning to active service regardless of whether the Society has been informed previously that the ship has been laid up, a re-commissioning survey is required.

1.6.11 Miscellaneous items

(a) If the recommendations of the Surveyor are considered in any case to be unnecessary or unreasonable, appeal may be made to the Society, who may direct a special examination to be held.

(b) It is the responsibility of the Owner to ensure that all surveys necessary for the maintenance of class are carried out at the proper time under the supervision of the Surveyor. It is, however, the normal practice of the Society to give timely notice to Owners when surveys become due, but the non-receipt of such notice, or of notice regarding other surveys, does not absolve Owners from their responsibility.

(c) Period of class

The ship's hull and machinery are always assigned the same period of validity of class (duration of one class period). The class continues to be valid, provided that the hull and machinery are subjected to all surveys stipulated and that any repairs required are carried out to the satisfaction of the Society.

(d) If the hull and/or the machinery are not subjected to the prescribed surveys on their due dates, a ship's class is to be suspended for both hull and machinery. If special shipboard equipment classed is not subject to the prescribed surveys on their due dates, the class of the special equipment only is to be suspended (i.e. Aux. boiler, CAS, CAB or CAU).

1.7 Approval

1.7.1 Survey reports

Upon completion of a survey of a classed ship, the Surveyor is to send one original and one copy of his reports with his recommendations, if set up, to the applicant, and at the same time, one copy to the Society. The Society reserves the right for final decision on the Surveyor's recommendations.

1.7.2 Decision of classification

Any member of the Committee or the staff of the Society having either direct or indirect interest in a ship to be classed, is not permitted to be present at or to participate in the meeting for the decision of the classification.

1.8 Certificates of Classification

1.8.1 Final Certificate of Classification

When the required reports and interim certificates on completion of the classification initial survey during construction of new ships, or the classification survey of ships not built under survey have been submitted for classification and approved by the Classification Committee, final Certificates of Classification signed by the Chairman, the President and the Chief Surveyor will be issued to the builders or owners.

1.8.2 Interim Certificates of Classification

(a) Upon completion of a classification entry survey, when the ship in the Surveyor's opinion, is considered to be in a fit and efficient condition and eligible to be classed, the Surveyor is permitted to issued an Interim Certificate of Classification stating that he has recommended to the Classification Committee that the ship is in a fit and efficient condition and eligible to be classed.

(b) The validity of Interim Certificates is limited to 6 months.

1.9 Notice of Surveys

1.9.1 It is the responsibility of the Owners to ensure that all surveys necessary for the maintenance of class are carried out at the proper time and in accordance with the instruction of the Society.

1.9.2 The Society will give timely notice to an Owner about forthcoming surveys by means of a letter, fax or e-mail. The omission of such notice, however, does not absolve the Owner from his responsibility to comply with CR's survey requirements for maintenance of class.

1.10 Suspension and Withdrawal of Class

1.10.1 In any of the following cases, the class of a ship is liable to be withheld or if already granted, may be withdrawn or expunged from the Register:

(a) The wording, symbols or marks on the certificate is altered, defaced or obliterated.

(b) Any damage or casualty is done to the hull or machinery to such an extent as affecting her class in the Register and the damage so sustained has been un-repaired or not been repaired to the satisfaction of the Society.

(c) The structure or arrangement of the hull, equipment and machinery have been altered without approval of the Society.

(d) The loading of the ship exceeds the load line assigned by the Society or the freeboard marks have been placed higher on the ship's sides than the positions assigned by the Society.

(e) The applicant fails to pay any survey fees or expenses.

(f) The applicant fails to fulfill the Society's requirements.

(g) The Owner so request.

(h) If the annual survey or intermediate survey is not complete within 3 months of the due date of the survey.

1.10.2 Class suspension and cancellation

(a) Class will be suspended automatically in the following condition.

(i) If a class periodical survey, MCS survey or HCS survey is over-due.

(ii) If any outstanding recommendation is over-due.

(iii) If other required survey in the Rules is over-due. However, over-due of required survey of environmental protection notation as listed in Table I 1-7 will not cause the suspension of class.

Class will be reinstated automatically from the date of satisfactory completion of the over-due surveys or the over-due recommendations.

(b) If the Owners failed to apply for a survey on any casualty, damage, operational failure or any repair upon the first opportunity, class may be suspended until the date before the repair survey is completed satisfactorily.

(c) Class Maintenance Certificate is not to be issued during the period of class suspension and before the required survey is completed satisfactorily.

(d) Class suspended for over 3 months may result in cancellation of class.

1.10.3 Change of periodicity, postponement or advance of surveys.

(a) The Society reserves the right, after due consideration, to change the periodicity, postponement or advance of surveys, taking into account particular circumstances.

(b) When a survey becomes overdue during a voyage, the following applies:

(i) In the case of a class Special Survey becomes overdue during a voyage, the Society may grant an extension to allow for completion of the class Special Survey, provided there is documented agreement to such an extension prior to the expiry date of the Certificate of Classification, adequate arrangements have been made for attendance of the Surveyor at the first port of call and the Society is satisfied that there is technical justification for such an extension. Such an extension will be granted only until arrival at the first port of call after the expiry date of the Certificate of Classification.

However if owing to "exceptional circumstances" as defined below, the class Special Survey cannot be completed at the first port of call, the Society may grant an extension according to 1.6.4(d), but the total period of extension shall in no case be longer than 3 months after the original due date of the class Special Survey.

"Exceptional circumstances" means:

(1) unavailability of dry-docking facilities, or

(2) unavailability of repair facilities, or

(3) unavailability of essential materials, equipment or spare parts, or

(4) delays incurred by action taken to avoid severe weather conditions.

(ii) In the case of annual and intermediate surveys, no postponement is granted. Such surveys are to be completed within their prescribed windows;

(iii) In the case of all other periodical surveys and recommendations, extension of class may be granted until the arrival of the ship at the first port of call.

1.10.4 Alternative procedures for certain types of ship

Alternatives to procedures specified in 1.10.2(a) above for automatic suspension of class and procedures specified in 1.10.2(d) above for cancellation of class may be applied to governmental ship, commercial ship owned or chartered by governments which are utilized in support of governmental operations or service and laid-up vessel ship.

1.11 Reclassification

1.11.1 When reclassification is desired for a ship for which the class previously assigned has been withdrawn, the Society is to direct a reclassification survey, appropriate to the age of the ship and the circumstances of the case, to be carried out by the Surveyor. If at such a survey, the ship is found or placed in a good and efficient condition in accordance with the requirements of the Rules, the Society is prepared to reinstate her original class as may be deemed necessary. The date of reclassification is to be recorded in the Register.

1.12 Survey Fees and Expenses

1.12.1 Survey fees are to be chargeable and expenses to be reimbursed if incurred according to the "Scale of Survey Fees" of the Society. All fees and expenses are to be promptly paid by the Owner or the applicant or their representatives after completion of each survey. In default of such payment, the Society may withhold the issuance of the certificates or reports. If the class is already granted, the same may be withdrawn or expunged from the Register.

1.13 International Conventions and Codes

Where authorized by the Administration of a country signatory thereto and upon request of the Owners of a classed ship or one intended to be classed, the Society will survey a new or existing ship of the applicable size for compliance with the provisions of applicable International Conventions or Codes and certify thereto in the manner prescribed in the Convention and Code.

1.14 Governmental Regulations

Where authorized by a government agency and upon request of the Owners of a classed ship or one intended to be classed, the Society will survey and certify a new or existing ship for compliance with particular regulations of that government on their behalf.

All work performed on behalf of governments shall be governed by the terms and conditions of the HSC Rules, unless the government specifies otherwise.

Owners of a classed ship are required to notify CR when a ship changes flag. so that appropriate action can be determined with respect to the scope of CR’s authorization by the new flag Administration.

1.15 Sea Trials

1.15.1 In the classification survey of all ships, sea trials specified in following (a) to (j) are to be carried out in full load condition, in the calmest possible sea and weather condition and at the deep unrestricted water. However, where sea trials cannot be carried out in full load condition, sea trials may be carried out in an appropriate loaded condition. The noise measurements specified in (k) are to be carried out at either the full load condition or the ballast condition.

(a) Speed test.

(b) Astern test.

(c) Steering test and the change-over test from the main to auxiliary steering gear.

(d) Turning test.

(e) Confirmation of no abnormality for the operating condition of machinery and behaviors of the ship during the trials.

(f) Performance test of windlass.

(g) Performance test of automatic and remote control systems for main propulsion machinery or the controllable pitch propellers, boilers and electric generating sets.

(h) The accumulation test of boilers.

(i) Measurement of the torsional vibration for the shafting systems. (refer to Part IV Chapter 6 of the Rules for Steel Ships)

Where it is to be deemed as appropriate by the Society, the measurement of the torsional vibration for the shafting systems during the sea trials may be dispensed with, provided that sufficient analysis data (eg. torsional vibration analysis), that ensure there is no critical vibration within the service speed range.

(j) Measurement of the sound pressure levels of fixed fire detection and fire alarm systems.

(k) Noise measurements. (If applicable, refer to Part II Chapter 34 of the Rules)

(l) Other tests where deemed necessary by the Society.

Some sea trial tests of an individual ship may be dispensed with provided that the available data can be obtained from those of a sister ship or other adequate means and a special approval in given by the Society.

1.15.2 The results of the tests are to be submitted to the Society as sea trial record.

1.15.3 In the case of classification survey of the ship not built under the Society's survey, the above tests may be dispensed with, provided that sufficient data on the previous tests are available and no alteration affecting the tests specified above have been made after the previous tests.

1.16 Stability Experiment

1.16.1 In the classification survey, Stability Experiment by inclining test of a ship are to be carried out upon completion of the ship (See Appendix 1). A stability information booklet, which is to be prepared on the basis of the particulars of stability determined by the results of stability experimental and to be approved by the Society, is to be provided on board. The intact stability criteria specified in Part II Chapter 30 or Part III Chapter 3 of the Rules shall be as a minimum requirement.

1.16.2 Inclining test may be dispensed with, provided that:

(a) The ship's basic stability data is available from inclining test of a sister ship, if a weight survey is carried out upon completion, and in comparison with the data derived from the sister ship, the deviation from the lightship displacement is not exceeding 1% for ship of 160 m or more in length, and 2% for ship of 50 m or less in length and as determined by linear interpolation for intermediate lengths, and a deviation from lightship LCG not exceeding 0.5 % of subdivision length (Ls); or

1.16.3 Where any alteration are made to a ship so as to materially affect the stability information, amended and approved stability information shall be provided. The ship shall be re-inclined if anticipated deviations exceed one of the values specified in next paragraph.

1.16.4 The ship shall be re-inclined whenever, in comparison with the approved stability information, a deviation from the lightship displacement exceeding 2% or a deviation of LCG exceeding 1% of Ls is found or anticipated.

1.17 Liability and Compensation

1.17.1 Article 1

(a) CR CLASSIFICATION SOCIETY is a Society (the "Society") whose purpose is the classification (« Classification ») of any ship or structure of any type or part of it or system therein collectively hereinafter referred to as a "Unit" whether linked to shore, river bed or sea bed or not, whether operated or located at sea or in inland waters or partly on land, including submarines, hovership, drilling rigs, offshore installations of any type and of any purpose, their related and ancillary equipment, subsea or not, such as well head and pipelines, mooring legs and mooring points or otherwise as decided by the Society.

The Society:

(i) prepares and publishes Rules for classification, Guidance Notes and other documents (« Rules »);

(ii) issues Certificates, Attestations and Reports following its interventions (« Certificates »);

(iii) publishes Registers on the CR Website.

(b) The Society also participates in the application of National and International Regulations or Standards, in particular by delegation from different Governments. Those activities are hereafter collectively referred to as « Certification ».

(c) The Society can also provide services related to Classification and Certification such as ship and company safety management certification; ship and port security certification, training activities; all activities and duties incidental thereto such as documentation on any supporting means, software, instrumentation, measurements, tests and trials on board.

(d) The Society can also provide services in independent surveys, such as independent survey of a ship, materials and equipment, or other equipment carried out according to the Purchase Agreement or specified rules; or appraisal before purchase of a non-CR class ship or verification of seaworthiness of a ship conducted at the request of the owner; or damage survey of a non-CR class ship as required by an insurance company.

(e) The interventions mentioned in (a), (b) and (c) are referred to as « Services ». The party and/or its representative requesting the services is hereinafter referred to as the « Client ». The Services are prepared and carried out on the assumption that the Clients are aware of the International Maritime and/or Offshore Industry (the "Industry") practices.

(f) The Society is neither and may not be considered as an Underwriter, Broker in ship's sale or chartering, Expert in Unit's valuation, Consulting Engineer, Controller, Naval Architect, Manufacturer, Shipbuilder, Repair yard, Charterer or Shipowner, who are not relieved of any of their expressed or implied obligations by the interventions of the Society.

1.17.2 Article 2

(a) Classification is the appraisement given by the Society for its Client, at a certain date, following surveys by its Surveyors along the lines specified in 1.17.3 and 1.17.4 hereafter on the level of compliance of a Unit to its Rules or part of them. This appraisement is represented by a class entered on the Certificates and periodically transcribed in the Society's Register.

(b) Certification is carried out by the Society along the same lines as set out in 1.17.3 and 1.17.4 hereafter and with reference to the applicable National and International Regulations or Standards.

(c) It is incumbent upon the Client to maintain the condition of the Unit after surveys, to present the Unit for surveys and to inform the Society without delay of circumstances which may affect the given appraisement or cause to modify its scope.

(d) The Client is to give to the Society all access and information necessary for the performance of the requested services.

1.17.3 Article 3

(a) The Rules, procedures and instructions of the Society take into account, at the date of their preparation, the state of currently available and proven technical knowledge of the Industry. They are not a code of construction neither a guide for maintenance or a safety handbook. Committees consisting of personalities from the Industry contribute to the development of those documents.

(b) The Society only is qualified to apply its Rules and to interpret them. Any reference to them has no effect unless it involves the Society's intervention.

(c) The Services of the Society are carried out by professional Surveyors according to the Code of Ethics of CR CLASSIFICATION SOCIETY.

(d) The operations of the Society in providing its Services are exclusively conducted by way of random inspections and do not in any circumstances involve monitoring or exhaustive verification.

1.17.4 Article 4

The Society, acting by reference to its Rules:

(a) Reviews the construction arrangements of the Units as shown on the documents presented by the Client;

(b) Conducts surveys at the place of their construction;

(c) Classes Units and enters their class in its Register;

(d) Surveys periodically the Units in service to note that the requirements for the maintenance of class are met. The Client is to inform the Society without delay of circumstances which may cause the date or the extent of the surveys to be changed.

1.17.5 Article 5

(a) The Society acts as a provider of services. This cannot be construed as an obligation bearing on the Society to obtain a result or as a warranty.

(b) The certificates issued by the Society pursuant to 1.17.5(a) here above are a statement on the level of compliance of the Unit to its Rules or to the documents of reference for the Services provided for. In particular, the Society does not engage in any work relating to the design, building, production or repair checks, neither in the operation of the Units or in their trade, neither in any advisory services, and cannot be held liable on those accounts. Its certificates cannot be construed as an implied or express warranty of safety, fitness for the purpose, seaworthiness of the Unit or of its value for sale, insurance or chartering.

(c) The Society does not declare the acceptance or commissioning of a Unit, nor of its construction in conformity with its design, that being the exclusive responsibility of its owner or builder, respectively.

(d) The Services of the Society cannot create any obligation bearing on the Society or constitute any warranty of proper operation, beyond any representation set forth in the Rules, of any Unit, equipment or machinery, computer software of any sort or other comparable concepts that has been subject to any survey by the Society.

1.17.6 Article 6

(a) The Society accepts no responsibility for the use of information related to its Services which was not provided for the purpose by the Society or with its assistance.

(b) If the Services of the Society cause the Client a damage which is proved to be the direct and reasonably foreseeable consequence of an error or omission of the Society, its liability towards the Client is limited to two times the amount of fee paid for the Service having caused the damage, but no greater than ten million (NT$10,000,000) New Taiwan dollars. The Society bears no liability for indirect or consequential loss such as e.g. loss of revenue, loss of profit, loss of production, loss relative to other contracts and indemnities for termination of other agreements.

(c) All claims are to be presented to the Society in writing within 3 months of the date when the Services were supplied or (if later) the date when the events which are relied on of were first known to the Client, and any claim which is not so presented shall be deemed waived and absolutely barred.

1.17.7 Article 7

(a) Requests for Services are to be in writing.

(b) Either the Client or the Society has rights to terminate the requested Services after giving the other party thirty days' written notice, for convenience, and without prejudice to the provisions in 1.17.8 hereunder.

(c) The class granted to the concerned Units and the previously issued certificates remain valid until the date of effect of the notice issued according to 1.17.7(b) hereabove subject to compliance with 1.17.2(c) hereabove and 1.17.8 hereunder.

1.17.8 Article 8

(a) The Services of the Society, whether completed or not, involve the payment of fee upon receipt of the invoice and the reimbursement of the expenses incurred.

(b) Overdue amounts are increased as of right by interest in accordance with the applicable legislation.

(c) The class of a Unit may be suspended in the event of non-payment of fee after a first unfruitful notification to pay.

1.17.9 Article 9

The documents and data provided to or prepared by the Society for its Services, and the information available to the Society, are treated as confidential. However:

(a) Clients have access to the data they have provided to the Society and, during the period of classification of the Unit for them, to the classification file consisting of survey reports and certificates which have been prepared at any time by the Society for the classification of the Unit;

(b) Copy of the documents made available for the classification of the Unit and of available survey reports can be handed over to another Classification Society in case of the Unit's transfer of class;

(c) The certificates, documents and information relative to the Units classed with the Society may be reviewed and disclosed upon order of the concerned governmental or inter-governmental authorities or of a Court having jurisdiction. The documents and data are subject to a file management plan.

1.17.10 Article 10

Any delay or shortcoming in the performance of its Services by the Society arising from an event not reasonably foreseeable by or beyond the control of the Society shall be deemed not to be a breach of contract.

1.17.11 Article 11

(a) In case of diverging opinions during surveys between the Client and the Society's Surveyor, the Society may designate another of its Surveyors at the request of the Client.

(b) Disagreements of a technical nature between the Client and the Society can be submitted by the Society to the advice of its Head Office.

1.17.12 Article 12

(a) Disputes over the Services carried out by delegation of Governments are assessed within the framework of the applicable agreements with the States, international Conventions and national rules.

(b) Disputes arising out of the payment of the Society's invoices by the Client are submitted to Taiwan Taipei District Court.

(c) Other disputes over the present Article 1.17 or over the Services of the Society are exclusively submitted to arbitration, by 3 arbitrators, in Taipei according to the Arbitration Act or any statutory modification or re-enactment thereof. The contract between the Society and the Client shall be governed by the Republic of China (Taiwan) law.

1.17.13 Article 13

(a) The Article 1.17 constitutes the sole contractual obligations binding together the Society and the Client, to the exclusion of all other representation, statements, terms, conditions whether express or implied. They may be varied in writing by mutual agreement.

(b) The invalidity of one or more stipulations of the present Article 1.17 does not affect the validity of the remaining provisions.

(c) The definitions herein take precedence over any definitions serving the same purpose which may appear in other documents issued by the Society.

Table I 1-1
List of Automation Symbol affixed to CMS

Symbol	Description	Reference
CAS	This symbol will be assigned when a ship's machinery installation complies with the requirements for automatic or remote control and monitoring system.	Part IV Chapter 5 of the Rules
CAU	This symbol will be assigned when a ship's machinery installation complies with the requirements for automatic or remote control and monitoring system with unattended machinery spaces.	Part IV Chapter 5 of the Rules
CAB	This symbol will be assigned when a ship is capable of operating as **CAU** but because of their compact propulsion machinery space design are not fitted with the means to control the propulsion and its associated machinery from a centralized location within the propulsion machinery space.	Part IV Chapter 5 of the Rules

Table I 1-2
List of Additional Service Notation

Notation	Description	Reference
LSC	This notation (**L**ight **S**tructure **C**raft) will be assigned to craft not engaged in international voyages which are capable of maximum speed $2.36 \leq V/\sqrt{L}$ and not to proceed in the course of their voyage more than the time as specified in 1.3.4 of the International Code of Safety for High-Speed Craft (hereinafter referred to as HSC Code).	The Rules and HSC Code, as applicable.
PSPC	This notation (**P**erformance **S**tandard for **P**rotective **C**oating) will be assigned to any ship where the applicable requirements in 23.1.4 of Part II of the Rules for Steel Ships are complied with.	Part II 23.1.4 of the Rules for Steel Ships
NR	This notation (the comfort **R**ating of **N**oise) will be assigned to ship where the applicable requirements in Chapter 34 of Part II of the Rules for Steel Ships are complied with.	Part II Chapter 34 of the Rules for Steel Ships
VR	This notation will be assigned to ships which comply with the limits for vibration of ISO 20283-5:2016, as given in Table II 34-2 of the Rules for Steel Ships.	Part II Chapter 34 of the Rules for Steel Ships

Table I 1-3
List of Service Restriction Notation

Notation	Description	Reference
Coastal Service	Service along a coast, the geographical limits of which will be indicated in the Register, and for a distance out to sea generally not exceeding 30 nautical miles, unless some other distance is specified for "Coastal Service" by the Administration with which the ship is registered, or by the Administration of the coast off which it is operating, as applicable. The operation/service limitations, such as significant wave height, or maximum voyage etc., may be indicated in the bracket affixed after this notation.	
Greater Coastal Service	Service along a coast, the geographical limits of which will be indicated in the Register, and for a distance out to sea generally farther than the area of **Coastal Service** in domestic voyage. The operation/service limitations, such as significant wave height, or maximum voyage etc., may be indicated in the bracket affixed after this notation.	
Protected Waters Service	Service in sheltered water adjacent to sand banks, reefs, breakwaters or other coastal features, and in sheltered waters between islands.	
Specified Operating Area Service	Service within one or more geographical area(s) which will be indicated in the Register.	
Specified Route Service	Service between two or more ports or other geographical features which will be indicated in the Register.	

Table I 1-4
List of Additional Survey Notation

Notation	Description	Reference
IWS	This notation (**I**n **W**ater **S**urvey) will be assigned to ship which are suitable for In-Water Survey in lieu of bottom survey in dry dock.	Part I/1.6.7(b) & 2.2.2 of the Rules
PCM(1)	This notation (**P**ropeller shaft **C**ondition **M**onitoring) will be assigned when oil lubricated propeller shaft arrangements with approved oil glands are fitted and the requirements of 2.3.4 of Part I of the Rules are complied with.	Part I/2.3.4 of the Rules
PMS(1)	This notation (**P**lanned **M**aintenance **S**cheme for machinery) will be assigned to ship for which an approved planned maintenance scheme for machinery is adopted as an alternative to continuous survey for machinery.	Part I /1.6.4(g) of the Rules

Note:

(1) Means notation, when assigned, to be added after the classification symbol **CMS**.

Table I 1-5
List of Special Equipment Notation

Notation	Description	Reference
Helideck-N	This notation(**Heli**copter **deck**), with N being **I**, **II, III** or **IV**, will be assigned to ship provided with helicopter facilities in accordance with related requirements of the Rules.	Part II Chapter 12A of the Rules
HHA	This notation (**H**igh **H**olding **A**nchor) will be assigned to ship receiving the equipment symbol **E**, with a specially considered and approved anchor that have at least 2 times the holding power of ordinary stockless anchors of the same weight. The mass of each bower anchor can be reduced by up to 25% of the mass specified in Part III 5.1.4(a), (see Table III 5-1), of the Rules.	Part III/ 5.1.4(a) of the Rules
SHHA	This notation (**Super H**igh **H**olding **A**nchor) will be assigned to ship receiving the equipment symbol **E**, with a specially considered and approved anchor that have at least 4 times the holding power of ordinary stockless anchors of the same weight. The mass of each bower anchor can be reduced by up to 50% of the mass specified in Part III 5.1.4(a), (see Table III 5-1), of the Rules.	Part III/ 5.1.4(a) of the Rules

Table I 1-6
List of Navigation Safety Notation

Notation	Description	Reference
NAV(1)	This notation will be assigned to ships when the requirements of navigation safety system in Chapters 2 and 3 of Part XIII of the Rules for Steel Ships are complied with.	Part XIII Chapters 2 and 3 of the Rules for Steel Ships
NAV0(1)	This notation will be assigned to ships when the requirements of navigation safety system in Chapters 2, 3, 4, 5, 6, 7, 9 and 10 of Part XIII of the Rules for Steel Ships are complied with.	Part XIII Chapters 2, 3, 4, 5, 6, 7, 9 and 10 of the Rules for Steel Ships
NAV1(1)	This notation will be assigned to ships when the requirements of navigation safety system in Chapters 2 to 10 of Part XIII of the Rules for Steel Ships are complied with.	Part XIII Chapters 2 to 10 of the Rules for Steel Ships

Note:
(1) It means notation, when assigned, to be added after the classification symbol **CMS**.

Table I 1-7
List of Environmental Protection Notation

Notation	Description	Reference
POT	This notation (**P**rotection of Fuel and Lubricating **O**il **T**anks) will be assigned to ships having an aggregate fuel oil capacity of 600 m^3 and above with fuel oil and lubricating oil tanks arranged in accordance with the requirement specified in 6.5.3 of Part VI of the Rules.	Part VI/ 6.5.3 of the Rules for Steel Ships
PP	This notation (**P**ollution **P**revention) will be assigned to ships where the applicable requirements in Chapter 32 of Part II of the Rules are complied with.	Part II Chapter 32 of the Rules for Steel Ships
BWM	This notation (**B**allast **W**ater **M**anagement) will be assigned to ships where the applicable requirements in Chapter 32 of Part II of the Rules are complied with.	Part II Chapter 32 of the Rules for Steel Ships
EEDI	This notation (**E**nergy **E**fficiency **D**esign **I**ndex) will be assigned to ships where the applicable requirements in Chapter 32 of Part II of the Rules are complied with.	Part II Chapter 32 of the Rules for Steel Ships
SEEMP	This notation (**S**hip **E**nergy **E**fficiency **M**anagement **P**lan) will be assigned to ships where the applicable requirements in Chapter 32 of Part II of the Rules are complied with.	Part II Chapter 32 of the Rules for Steel Ships
SRE	This notation (**S**hip **Re**cycling) will be assigned to ships where the applicable requirements in Chapter 31 of Part II of the Rules are complied with.	Part II Chapter 31 of the Rules for Steel Ships
SRE-EU	This notation **SRE-EU** will be assigned to ships where the applicable requirements in Chapter 31 of Part II of the Rules are complied with.	Part II Chapter 31 of the Rules for Steel Ships
SCR(1)	This notation will be assigned to ships where the applicable requirements in the Guidelines for **S**elective **C**atalytic **R**eduction Systems are complied with.	Part IV/ 3.7.3(i) of the Rules for Steel Ships
SO_X Scrubber(1)	This notation will be assigned to ships where the applicable requirements in the Guidelines for **SOx Scrubber** Systems are complied with.	Part IV/ 3.7.3(i) of the Rules for Steel Ships
SO_X Scrubber Ready-N(1)	This notation, with **N** being **I**, **II** or **III**, will be assigned to ships where the applicable requirements in the Guidelines for SO_X Scrubber Systems are complied with.	Guidelines for SO_X Scrubber Systems
EGR(1)	This notation will be assigned to ships where the applicable requirements in the Guidelines for **E**xhaust **G**as **R**ecirculation Systems are complied with.	Part IV/ 3.7.3(i) of the Rules for Steel Ships

Note:
(1) It means notation, when assigned, to be added after the classification symbol **CMS**.

Chapter 2

Survey Requirements of Coast Guard Ships

2.1 General

2.1.1 General

(a) The Surveyor is to have free access at any time in order to examine a classed ship and to make sure of her good condition.

(b) When a survey becomes due or any damage or alterations which may affect the technical fitness or the class to the hull or machinery of the ship occurred, the owner or his representative is to apply in time for a survey to be made without waiting for notice from the Society. (See 1.6.10(a) and 1.6.11(b))

(c) In the case of any disagreement or dispute between the owner and the Surveyor or other officers regarding the inspection, examination and survey work, an appeal in writing for re-survey or explanation may be made to the Society.

(d) Though the survey of a certain part of the ship being surveyed is not included in this Chapter, the Surveyor may, if deemed necessary, make an additional survey of such a part. The Head Office of the Society also reserve the rights to perform an occasional survey whenever reasonable necessity exists.

(e) Modification of requirements

(i) At the periodical surveys, the Surveyor may modify the requirements for periodical surveys specified in this Chapter having regard to the size, service engaged, age, construction, results of last surveys and actual condition of the ship.

(ii) For spaces where effective coatings are found to be in a Good condition, the extent of internal examination or gauging requirements specified in this Chapter may be specially considered at the discretion of the Surveyor.

(f) The survey requirements to maintain a Class Notation for an additional system or service are as contained in Chapter 3 of the Rules for Steel Ships, if any.

2.1.2 Definitions

(a) Ballast Tank

(i) Ballast Tank - All Ships

A Ballast Tank is a tank which is used primarily for the carriage of salt water ballast.

(b) Spaces

Spaces are separate compartments including holds, tanks, cofferdams and void spaces bounding holds, decks and the outer hull.

(c) Overall Survey

An overall survey is a survey intended to report on the overall condition of the hull structure and determine the extent of additional close-up surveys.

(d) Transverse Section

A Transverse Section includes all longitudinal members such as plating, longitudinals and girders at the deck, sides, bottom, inner bottom, longitudinal bulkhead and wing tanks. For transversely framed ships, a transverse section includes adjacent frames and their end connections in way of transverse sections.

(e) Representative Tanks/Spaces

Representative Tanks/Spaces are those which are expected to reflect the condition of other tanks/spaces of similar type and service and with similar corrosion prevention systems. When selecting Representative Tanks/Spaces account is to be taken of the service and repair history on board and identifiable Critical Structural Areas and/or Suspect Areas

(f) Suspect Areas

Suspect Areas are locations showing Substantial Corrosion and/or are considered by the Surveyor to be prone to rapid wastage.

(g) Critical Structural Area

Critical Structural Areas are locations which have been identified from calculations to require monitoring or from the service history of the subject ship or from similar or sister ship (if available) to be sensitive to cracking, buckling or corrosion which would impair the structural integrity of the ship.

(h) Renewal Thickness

Renewal thickness (t_{ren}) is the minimum allowable thickness, in mm, below which renewal of structural members is to be carried out.

(i) Substantial Corrosion

Substantial Corrosion is an extent of corrosion such that assessment of corrosion pattern indicates a wastage in excess of 75% of allowable margins, but within acceptable limits.

(j) Corrosion Prevention System

A Corrosion Prevention System is normally considered as a full hard coating.
Hard Protective Coating is usually to be epoxy coatings or equivalent.
Other coating systems, which are neither soft nor semi-hard coatings, may be considered acceptable as alternatives, provided that they are applied and matained in compliance with the manufacturers' specification.

(k) Coating Condition

Coating condition is defined as follows:

(i) GOOD is a condition with only minor spot rusting.

(ii) FAIR is a condition with local breakdown at edges of stiffeners and weld connections and/or light rusting over 20% or more of areas under consideration, but less than as defined for POOR condition.

(iii) POOR is a condition with general breakdown of coating over 20% or more of areas, or hard scale at 10% or more of areas under consideration.

(l) Prompt and Thorough Repair

A Prompt and Thorough repair is a permanent repair completed at the time of the survey to the satisfaction of the Surveyor, therein removing the need for the imposition of any associated condition of classification or recommendation.

(m) Special consideration

Special consideration or specially considered (in connection with close-up surveys and thickness measurements) means sufficient close-up inspection and thickness measurements are to be taken to confirm the actual average condition of the structure under the coating.

(n) Air pipe head

Air pipe heads installed on the exposed decks are those extending above the freeboard deck or superstructure decks.

(o) Wind and Water Strakes

Wind and water strakes are the strakes of a ship's side shell plating between the ballast and deepest load waterline.

(p) Oil

Oil is petroleum in any form including crude oil, fuel oil, sludge, oil refuse, and refined products others than petrochemicals which are subject to the provisions of Annex II of the MARPOL 73/78.

(q) Pitting Corrosion , Edge corrosion and Grooving corrosion

(i) Pitting corrosion is defined as scattered corrosion spots/areas with local material reductions which are greater than the general corrosion in the surrounding area. Pitting intensity is defined as shown below:

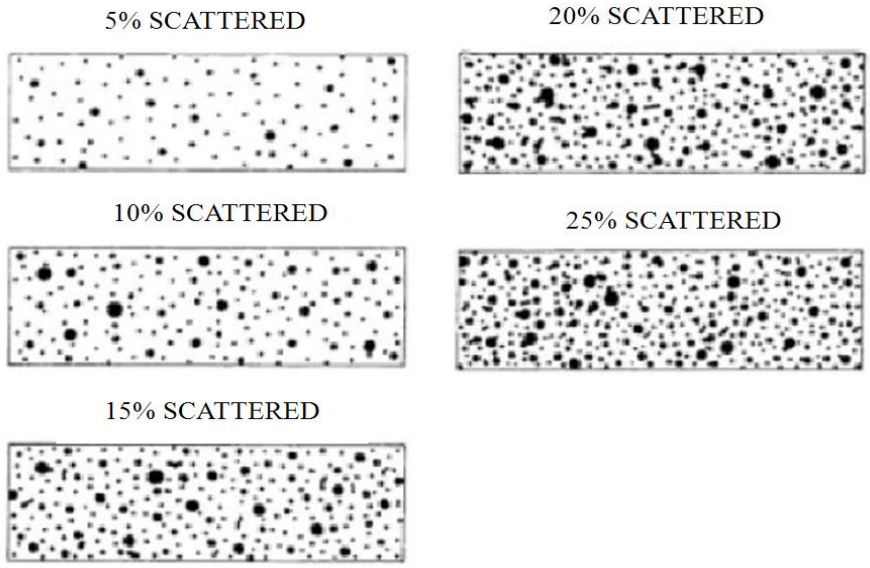

(ii) Edge corrosion is defined as local corrosion at the free edges of plates, stiffeners, primary support members and around openings. An example of edge corrosion is shown in below:

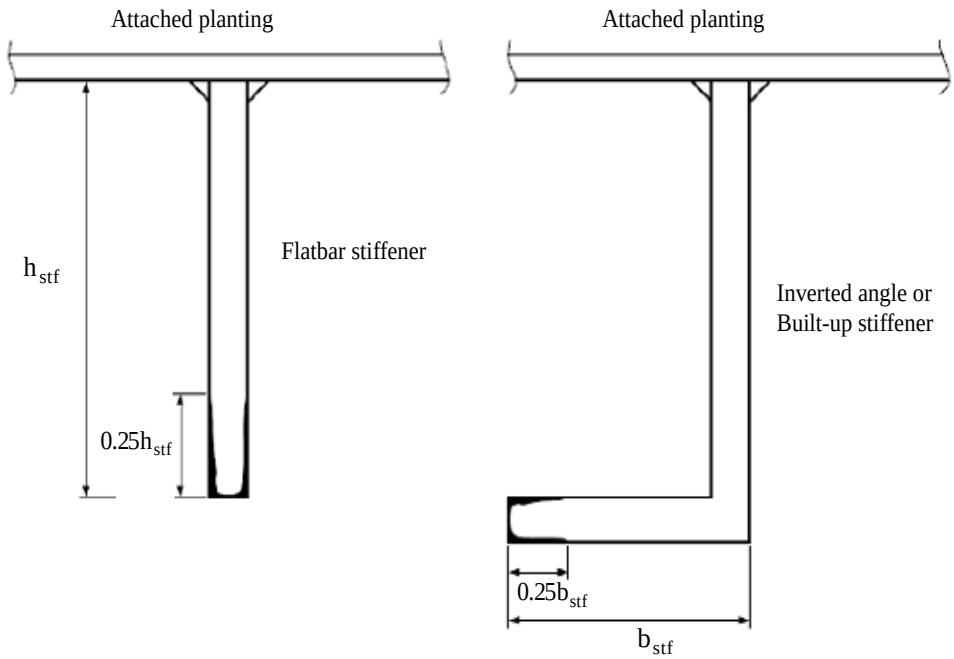

(iii) Grooving corrosion is typically local material loss adjacent to weld joints along abutting stiffeners and at stiffener or plate butts or seams. An example of groove corrosion is shown in below:

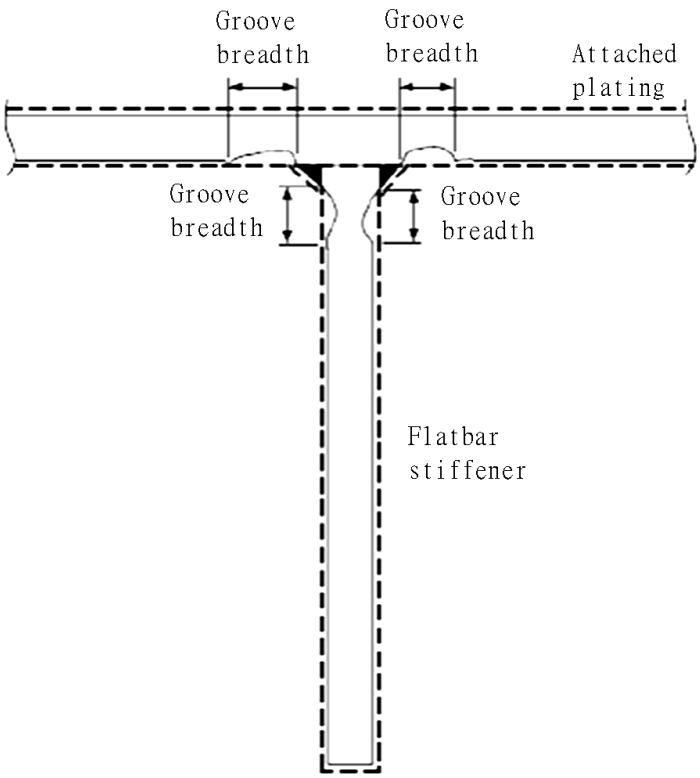

2.1.3 Repairs

(a) Any damage in association with wastage over the allowable limits (including buckling, grooving, detachment or fracture), or extensive areas of wastage over the allowable limits, which affects or, in the opinion of the Surveyor, will affect the ship's structural, watertight or weathertight integrity, is to be promptly and thoroughly (see 2.1.2 (k)) repaired. Area to be considered include:

(1) side shell frames, their end attachments and adjacent shell plating;

(2) deck structure and deck plating;

(3) bottom structure and bottom plating;

(4) watertight or oiltight bulkheads;

(5) the weld connection between air pipes and deck plating;

(6) all air pipe heads installed on the exposed decks;

(7) ventilators, including closing devices, if any.

For locations where adquate repair facilities are not available, consideration may be given to allow the ship to proceed directly to a repair facility. This may require temporary repairs for the intended voyage as deemed necessary by the Society.

(b) Additionally, when a survey results in the identification of structural defects or corrosion, either of which, in the opinion of the Surveyor, will impair the ship's fitness for continued service, remedial measures are to be implemented before the ship continues in service.

(c) Where the damage found on structure mentioned in 2.1.3(b)(i) is isolated and of a localised nature which does not affect the ship's structural integrity, consideration may be given by the Surveyor to allow an appropriate temporary repair to restore watertight or weathertight integrity and impose a Recommendation/Condition of class in accordance with IACS PR 35, with a specific time limits.

2.1.4 Procedures for class related services

(a) Thickness measurements and close-up surveys - hull structures

(i) Thickness measurements are to be carried out by a firm approved by the Society in accordance with the procedures for certification of firms engaged in thickness measurement of hull structures as specified in “Guidelines for Approval of Service Suppliers” of the Society.

(ii) Thickness measurement is normally to be carried out under the supervision of the Surveyor. However, the Surveyor may accept thickness measurement not carried out under his supervision, in which case provisions is to be made for the Surveyor to recheck the measurements as deemed necessary to ensure acceptable accuracy.

(iii) A thickness measurement report is to be prepared by the approved firm carrying out the thickness measurement, the thickness measured as well as the corresponding original thickness. The report is to give the date when the measurement was carried out, the type of measuring equipment, names of personnel and their qualifications and is to be signed by the operator and the Surveyor.

(iv) The thickness measurement report is to be verified by the Surveyor.

(v) In any kind of survey, i.e. Special, Intermediate, Annual or other Surveys having the scope of foregoing ones, thickness measurements of structures in areas where close-up surveys are required, shall be carried out simultaneously with close-up surveys.

(vi) Consideration may be given by the attending Surveyor to allow use of Remote Inspection Techniques (RIT) as an alternative to close-up survey. Surveys conducted using a RIT are to completed to the satisfaction of the attending Surveyor. When RIT is used for a close-up survey, temporary means of access for the corresponding thickness measurements is to be provided unless such RIT also able to carry out the required thickness measurements.

(vii) For structure built with a material other than steel, alternative thickness measurement requirements may be developed and applied as deemed necessary by the Society.

(viii) Thickness measurements Acceptance Criteria.

The acceptance criteria for thickness measurements are according to Table I 2-5 to 2-7 and/or specific IACS URs depending on ships age and structural elements concern.

(ix) Remote Inspection Techniques (RIT), where applicable

(1) The RIT is to provide the information normally obtained from a close-up survey. RIT surveys are to be carried out in accordance with the requirements given here-in and the requirements of IACS Recommendation 42 “Guidelines for use of Remote Inspection Techniques for surveys”. These considerations are to be included in the proposals for use of a RIT which are to be submitted in advance of the survey so that satisfactory arrangements can be agreed with the Society.

(2) The equipment and procedure for observing and reporting the survey using a RIT are to be discussed and agreed with the parties involved prior to the RIT survey, and suitable time is to be allowed to set-up, calibrate and test all equipment beforehand.

(3) When using a RIT as an alternative to close-up survey, if it is not carried out by the Society itself, it is to be conducted by a firm approved as a service supplier according to "Guidelines for Approval of Service Suppliers" of the Society and is to be witnessed by the attending Surveyor of the Society.

(4) The structure to be examined using a RIT is to be sufficiently clean to permit meaningful examination. Visibility is to be sufficient to allow for a meaningful examination. The Society is to be satisfied with the methods of orientation on the structure.

(5) The Surveyor is to be satisfied with the method of data presentation including pictorial represetation, and a good two-way communication between the Surveyor and RIT operator is to be provided.

(6) If the RIT reveals damage or deteriotation that requires attention, the Surveyor may require traditional survey to be undertaken without use of a RIT.

(b) In-Water Surveys

(i) The In-Water Survey is to be carried out under the surveillance of the Surveyor by an In-Water Survey firm approved by the Society according to “CR Guidelines for Approval of Service Suppliers”, by diver or Remotely Operated Vehicle (ROV).

(ii) The Society's approval is to be granted to the firms whose organization and management structure are satisfactorily established, which employ the divers using closed-circuit television with two-way

communication or operators using Remotely Operated Vehicle (ROV) for the In-Water Survey work and which have sufficient equipment proved suitable for the work undertaken.

(iii) The continued approval of the firm is to depend on its original standards and ability being maintained. Any changes in the information originally supplied are to be reported to the Society; however, the approval is to be renewed after a period not exceeding 5 years.

2.1.5 Provision for surveys

(a) Conditions for survey

(i) The owner is to provide the necessary facilities for a safe execution of the survey.

(ii) Tanks and spaces are to be safe for access, i.e. gas freed, ventilated, and illuminated.

(iii) Tanks and spaces are to be sufficiently clean and free from water, scale, dirt, oil residues, etc. to reveal corrosion, deformation, fractures, damages or other structural deterioration. In particular, this applies to areas which are subject to thickness measurement.

(iv) Sufficient illumination is to be provided to reveal corrosion, deformation, fractures, damages or other structural deterioration.

(b) Access to structures

(i) For survey, means are to be provided to enable the Surveyor to examine the structure in a safe and practical way.

(ii) For survey in holds and water ballast tanks, one or more of the following means for access, acceptable to the Surveyor, is to be provided.

(1) Permanent staging and passages through structures.

(2) Temporary staging and passages through structures ladders.

(3) Lifts and moveable platforms.

(4) Other equivalent means.

(iii) For Surveys conducted by use of a Remote Inspection Technique (RIT), one or more of the following means for access, acceptable to the Surveyor, is to be provided:

(1) Unmanned robot arm

(2) Remotely Operated Vehicles (ROV)

(3) Unmanned Aerial Vehicles / Drones

(4) Other means acceptable to the Society.

(c) Equipment for survey

(i) Thickness measurement is normally to be carried out by means of ultrasonic test equipment. The accuracy of the equipment is to be proven to the Surveyor as required.

(ii) One or more of the following fracture detection procedures may be required if deemed necessary by the Surveyor:

(1) Radiographic equipment.

(2) Ultrasonic equipment.

(3) Magnetic particle equipment.

(4) Dye penetrate.

2.2 Bottom Surveys

2.2.1 Bottom Surveys in dry dock

At each Bottom Survey in dry dock the following requirements are to be complied with:

(a) Normally the ship is to be placed on blocks of sufficient height in a dry dock or on a slipway and cleaned, and proper staging is to be erected as may be necessary for examination. A docking survey covers an examination of elements such as shell plating including bottom and bow plating, stern frame and rudder, sea chests and vlaves, propellers, etc. The shell plating is to be examined for excessive corrosion, or deterioration due to chafing or contact with the ground and for any undue unfairness or buckling. Special attention is to be paid to the connection between the bilge strakes and the bilge keels. Important plate unfairness or other deterioration which do not necessitate immediate repairs are to be recorded.

(b) Sea chests and their gratings, sea connections and overboard discharge valves and cocks and their fastenings to the hull or sea chests are to be examined. Valves and cocks need not be opened up more than once in a Special Survey period unless considered necessary by the Surveyor.

(c) Visible parts of rudder, rudder pintles, rudder stocks and couplings, stern frame, gudgeons, etc. are to be examined. If considered necessary by the Surveyor, the rudder is to be lifted or the inspection plates removed for the examination of pintles. The clearance in the rudder bearing is to be ascertained and recorded. Where applicable, pressure test of the rudder may be required as deemed necessary by the Surveyor.

(d) Visible parts of propeller and stern bush, are to be examined. The clearance in the stern bush and the efficiency of the oil gland, if fitted, are to be ascertained and recorded. For controllable pitch propellers, the Surveyor is to be satisfied with the fastenings and tightness of hub and blade sealing. Dismantling need not to be carried out unless considered necessary by the Surveyor.

Survey in place for the propeller shaft and stern tube shaft is to be carried out as per requirement of 2.3.6.

(e) Visible parts of side thrusters are to be examined. Other propulsion systems which also have manoeuvring characteristics (such as directional propellers, vertical axis propellers, water jet units) are to be examined externally with focus on the condition of gear housing, propeller blades, bolt locking and other fastening arrangements. Sealing arrangement of propeller blades, propeller shaft and steering column shall be verified. Dismantling may be required to the extent found necessary by the Surveyor.

(f) Anchor and anchor chains are to be arranged and examined. Chain lockers are to be internally examined. The diameter of anchor chain cables is to be measured at Special Survey No. 2 and subsequent Special Survey.

2.2.2 In-Water Survey

(a) General requirements

(i) The underwater body is to be protected against corrosion by a full hard coating system and strongly recommended to be also protected by an impress current cathodic protection system.

(ii) The information obtained from the In-Water Survey is to be as reliable as that obtained from the docking survey.

(iii) The In-Water Survey is to provide the information normally obtained from a docking survey. Special consideration shall be given to ascertaining rudder bearing clearances and stern bush clearances of oil stern bearings based on a review of the operating history, on board testing and stern oil sample reports. These considerations are to be included in the proposals for In-Water Survey which are to be submitted in advance of the survey so that satisfactory arrangements can be agreed with the Society

(iv) Application for the subsequent In-Water Survey is also to be submitted to the Society for acceptance.

(v) The In-Water Survey is to be carried out with the ship in sheltered water and preferably with weak tidal streams and currents. The in-water visibility and the cleanliness of the hull below the waterline is to be clear enough to permit a meaningful examination which allows the surveyor and the In-Water Survey firm to determine the condition of the plating, appendages and the welding. The Society is to be satisfied with the methods of orientation of the divers or Remotely Operated Vehicle (ROV) on the plating, which should make use where necessary of permanent markings on the plating at selected points.

(vi) The equipment, procedure for observing and reporting the survey are to be discussed with the parties involved prior to the In-Water Survey, and suitable time is to be allowed to permit the In-Water Survey firm to test all equipment beforehand.

(vii) The In-Water Survey is to be carried out under the surveillance of a surveyor by an In-Water Survey firm approved as a service supplier according to "Guidelines for Approval of Service Suppliers" of the Society.

(viii) The Surveyor is to be satisfied with the method of pictorial representation, and a good two-way communication between the Surveyor and divers is to be provided.

(ix) If the In-Water Survey reveals damage or deterioration that requires early attention, the Surveyor may require that the ship be drydocked in order that a detailed survey can be undertaken and the necessary repairs carried out.

(x) The In-Water Survey may not be applicable if there are outstanding recommendations for repairs to the propeller, rudder, stern frame, underwater hull structure, or sea valves.

(b) Plans and documents

When ships are intended to be subjected to an In-Water Survey, the following plans and documents are to be submitted to the Society:

(i) Plans of the shell plating below waterline showing the details of the location and sizes of shell opening, location of bottom plugs, location of water and oil tight bulkheads;

(ii) Detailed information or drawings of constructions and arrangement indicated in the item (c) below together with their colour photographs and detailed instruction for inspection of such constructions and arrangements; and

(iii) Other data, if deemed necessary.

(c) Constructions and arrangements

The constructions and arrangements of ships which are intended to be subjected to an In-Water Survey are to comply with the following:

(i) Anodes are to be attached in such a manner as to be easily replaced where necessary.

(ii) Rudder is to be provided with the means of facilitating the measurement of clearances in way of each pintle. Liners on rudder stock and pintles are to be marked in such a way so that any relative movements can be checked.

(iii) Rope guard ring plates are to be of such constructions as to facilitate the inspection of shafts between propeller hubs and stern frame boss.

(iv) In case of water lubricating type stern-tube bearings, the devices which may indicate the clearance of propeller shaft strut and stern bearings are to be provided.

(v) In case of oil lubricating type stern-tube bearings, suitable means of ascertaining the performances of stern-tube bearings including oil sealing devices are to be provided.

(vi) Suitable means of ascertaining the position and identifying each blade of propellers from inboard are to be provided.

(vii) Sea connections are to be provided with the means of blanking their openings to the sea from outboard so that the sea connections may be opened up from inboard for examination and repairs. Grating of sea suctions are to be of hinged type as far as practicable.

(viii) To the hull below load water line, provision is to be made for ready identification of the position of bulkheads and transverses (including indication of the number of transverses). To bottom shell plating, provision is to be made for ready identification of the flat bottom and of ship's lengthwise (fore and aft) and athwartship (port side or starboard side) direction.

(d) Performance of In-Water Survey

(i) The In-Water Survey is to be carried out in sufficiently clear and calm waters. The ship is to be as light as possible. The shell side below the waterline are to be sufficiently clean.

(ii) The underwater pictures on the surface monitor screen are to offer reliable technical information such as to enable the Surveyor to judge the parts surveyed.

(iii) The In-Water Survey is to provide the information normally obtained from a bottom survey in dry dock. It at least covers an examination of the bottom and side plates of the shell plating, including any attachments and the rudder, an external examination of propellers as well as propeller shafts, and the cleaning condition of sea chests.

2.3 Surveys of Propeller Shafts and Tube Shafts

2.3.1 General

(a) Application

(i) Unless alternative means are provided to assure the condition of the propeller shaft assembly, the requirements specified in 2.3.1 and 2.3.2 apply to the ships with tube shaft and propeller shaft fitted with a propeller.

(1) For oil lubricated shafts or closed loop system fresh water lubricated shafts (closed system), the survey requirements for Method 1 to Method 3 are to be in accordance with 2.3.2 in Part I of the Rules for Steel Ships.

(2) For open water lubricating systems, the requirements specified in 2.3.2 are to be applied.

(ii) The surveys for miscellaneous propellers including controllable pitch propellers, directional propeller units and water jet units are to be carried out in accordance with 2.3.3.

(iii) Propeller shaft condition monitoring, survey in place and wear-down limits are to in accordance with 2.3.4 to 2.3.6.

(b) Definitions

(i) Shaft (see Fig. I 2-1)

For the purpose of this paragraph shaft is a general definition that includes:

(1) Propeller shaft

(2) Tube shaft

The definition does not include the intermediate shaft(s) which is(are) considered part of the propulsion shafting inside the ship.

(ii) Propeller Shaft

Propeller shaft is the part of the propulsion shaft to which the propeller is fitted. It may also be called screwshaft or tailshaft.

(iii) Tube Shaft

Tube shaft is a shaft placed between the intermediate shaft and propeller shaft, normally arranged within a stern tube or running in open water. It may also be called Stern Tube Shaft.

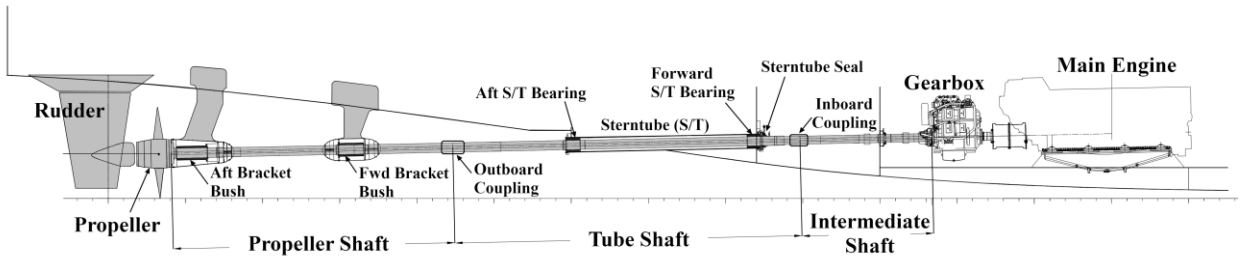

Fig. I 2-1
Typical Water Lubricated Shaft Systems

(iv) Sterntube

Tube or pipe fitted in the shell of a ship at the stern (or rear part of the ship), below the water-line, through which passes the tube shaft or aftermost section of the propeller-shaft.

Sterntube is the housing of the shaft bearings, generally two (one aft and one fore), that sustain the shaft and allows its rotation with less frictional resistance. The stern tube also accommodates the shaft sealing arrangement.

(v) Water Lubricated Bearing

Water lubricated bearings are bearings cooled / lubricated by water (fresh or salt).

(vi) Open Systems (water)

Open water lubricating systems use water to lubricate the bearings and are exposed to the environment.

(vii) Adequate means for protection against corrosion

An adequate means for protection against corrosion is an approved means for full protection of the core shaft against sea water intrusion and subsequent corrosion attack. Such means are used for the protection of common steel material against corrosion particularly in combination with water lubricated bearings.

Typical means are for example:

(1) continuous metallic, corrosion resistant liners,

(2) continuous cladding,

(3) multiple layer synthetic coating,

(4) multiple layer of fiberglass,

(5) combinations of above mentioned,

(6) rubber / elastomer covering coating.

The means for protection against corrosion are installed / applied according to the Society approved procedures.

(viii) Corrosion Resistant Shaft

Corrosion resistant shaft is made in approved corrosion resistant steel as core material for the shaft.

(ix) Sterntube Sealing System

Sterntube Sealing system is the equipment installed on the inboard extremity and, for closed systems, at outboard extremity of the sterntube. Inboard Seal is the device fitted on the fore part of the sterntube that achieve the sealing against the possible leakage of the lubricant media in to the ship internal.

Outboard seal is the device fitted on the aft part of the sterntube that achieve the sealing against the possible sea water ingress and the leakage of the lubricant media.

(x) Service records

Service records are regularly recorded data showing in-service conditions of the shaft(s) and may include, as applicable: lubricating oil temperature, bearing temperature and oil consumption records (for oil lubricated bearings) or water flow, water temperature, salinity, pH, make-up water and water pressure (for closed loop fresh water lubricated bearings depending on design).

(xi) Keyless connection

Keyless connection is the forced coupling Methodology between the shaft and the propeller without a key achieved through interference fit of the propeller boss on the shaft tapered end.

(xii) Keyed connection

Keyed connection is the forced coupling Methodology between the shaft and the propeller with a key and keyway achieved through the interference fit of the propeller boss on the shaft tapered end.

(xiii) Flanged connection

Flanged connection is the coupling Methodology, between the shaft and the propeller, achieved by a flange, built in at the shaft aft end, bolted to propeller boss.

(xiv) Alternative means

Shafting arrangements such as, but not limited to, an approved Condition Monitoring Scheme and / or other reliable approved means for assessing and monitoring the condition of the tail shaft, bearings, sealing devices and the stern tube lubricant system capable to assure the condition of the propeller shaft assembly with an equivalent level of safety as obtained by survey methods as applicable herein.

2.3.2 Water Lubricated shafts (open systems)

(a) Shaft Survey Methods

(i) METHOD 4 (IACS UR Z21)

The survey is to consist of:

- Drawing the shaft and examining the entire shaft (including liners, corrosion protection system and stress reducing features, where provided), inboard seal system and bearings.

- For keyed and keyless connections:
  - removing the propeller to expose the forward end of the taper,
  - performing a non-destructive examination (NDE) by an approved surface crack-detection Method all around the shaft in way of the forward portion of the taper section, including the keyway (if fitted). For shaft provided with liners the NDE shall be extended to the after edge of the liner
- For flanged connection:
  - Whenever the coupling bolts of any type of flange-connected shaft are removed or the flange radius is made accessible in connection with overhaul, repairs or when deemed necessary by the surveyor, the coupling bolts and flange radius are to be examined by means of an approved surface crack detection method.
- Checking and recording the bearing clearances.
- Verification that the propeller is free of damages which may cause the propeller to be out of balance.
- Verification of the satisfactory conditions of inboard seal during re-installation of the shaft and propeller.

(b) Shaft extension surveys - Extension types

(i) Extension up to 1 year

The survey is to consist of:

- Visual Inspection of all accessible parts of the shafting system.
- Verification that the propeller is free of damages which may cause the propeller to be out of balance.
- Checking and recording the clearances of bearing.
- Verification of the effectiveness of the inboard seal.

Pre-requisites to satisfactorily verify in order to apply EXTENSION UP TO 1YEAR:

- Review of the previous clearance recordings.
- Service records.
- Verification of no reported repairs by grinding or welding of shaft and/or propeller.
- Confirmation from the Chief Engineer that the shafting arrangement is in good working condition.

(ii) Extension up to 3 months

The survey is to consist of:

- Visual Inspection of all accessible parts of the shafting system.
- Verification that the propeller is free of damages which may cause the propeller to be out of balance.
- Verification of the effectiveness of the inboard seal.

Pre-requisites to satisfactorily verify in order to apply extension up to 3 months:

- Review of the previous clearance recordings.
- Service records.
- Verification of no reported repairs by grinding or welding of shaft and/or propeller.
- Confirmation from the Chief Engineer that the shafting arrangement is in good working condition.

(c) Shaft Survey Intervals

(i) The following survey intervals between surveys according to Method 4 are applicable to all types of propeller connections.

- For keyless propeller connections the maximum interval between two consecutive dismantling and verifications of the shaft cone by means of non-destructive examination (NDE) shall not exceed 15 years.
- For surveys completed within 3 months before the shaft survey due date, the next period will start from the shaft survey due date.

(1) Configurations allowing 5 year intervals
- Single shaft operating exclusively in fresh water.
- Single shaft provided with adequate means of corrosion protection, or single corrosion resistant shaft.
- All kinds of multiple shafts arrangements.

(2) Other systems
Shaft not belonging in one of the configurations listed in (1) above has to be surveyed according to Method 4 every 3 years.

(ii) Survey extensions

For all types of propeller connections, the interval between two consecutive surveys may be extended after the execution of extension survey as follows:

(1) Extension up to a maximum of 1 year: no more than 1 extension can be granted.
No further extension, of other type, can be granted.

(2) Extension up to a maximum of 3 months: no more than 1 "3 months extension" can be granted. In the event an additional extension is requested the requirements of the "1 year extension" are to be carried out and the shaft survey due date prior to the previous extension is extended for a maximum of 1 year.

The extension survey should normally be carried out within 1 month of the shaft survey due date and the extension counts from the shaft survey due date.

If the extension survey is carried out more than 1 month prior to the shaft survey due date, then the period of extension counts from the date of the extension survey was completed.

(d) Survey intervals for open systems see the following table.

Survey Intervals (Open Systems)

Survey Intervals (Open Systems)			
- Single shaft operating exclusively in fresh water. - Single shaft provided with adequate means of corrosion protection, single corrosion resistant shafts - All kinds of multiple shafts arrangements		Other shaft configuration	
All kinds of propeller coupling(4)		All kinds of propeller coupling(4)	
Every 5 years(1)	Method 4	Every 3 years(1)	Method 4
Extension 1 year	Yes(2)	Extension 1 year	Yes(2)
Extension 3 months	Yes(3)	Extension 3 months	Yes(3)
Footnotes: For surveys (Method 4) completed within 3 months before the shaft survey due date, the next period will start from the shaft survey due date. The extension survey should normally be carried out within 1 month of the shaft survey due date and the extension counts from the shaft survey due date. If the extension survey is carried out more than 1 month prior to the shaft survey due date, then the period of extension counts from the date of the extension survey was completed.			

Notes:

(1) Unless an Extension type (Extension 1 Y, Extension 3 M) is applied in between.

(2) No more than one extension can be granted. No further extension, of other type, can be granted.

(3) No more than one extension can be granted. In the event an additional extension is requested the requirements of the one year extension are to be carried out and the shaft survey due date prior to the previous extension is extended for a maximum of one year.

(4) For keyless propeller connections the maximum interval between two consecutive dismantling and verifications of the shaft cone by means of non-destructive examination (NDE) shall not exceed 15 years.

2.3.3 Miscellaneous propellers

(a) Controllable pitch propellers where fitted are to be opened up and the working parts examined, together with the control gear.

(b) Directional propeller units are to be examined as the following requirements.

(i) Lubrication oil samples are to be taken and sent to a recognised laboratory for analysis at regular intervals, not exceeding 3 months. Records of lubrication oil analysis are to include trends of previous analysis, and be available onboard at all times. A representative oil sample is to be taken before the filters and with the unit in its normal running condition. Oil analysis is to detect iron (Fe) and other solid contamination in addition to possible water content. Acceptance criteria for wear particles and water content are set by the relevant thruster maker (in case thruster maker criteria are not available due to e.g. bankruptcy of gear thruster maker, the water content due to condensation is normally not to exceed 0.5%). The oil analysis is to cover all of the following areas, if applicable:

(1) lubrication oil for gears, bearings;

(2) sealing boxes;

(3) steering gear; and

(4) propeller.

If the propeller shafts seal oil systems do not allow for sampling unless the vessel is in dry dock, a representative oil analysis is to be taken in connection with the bottom survey in dry-dock.

(ii) The thrusters are to be subjected to complete survey every 5 years. The complete survey is to include:

(1) evaluation of oil analysis of gear lubrication oil, propeller hydraulic system oil and sealing system oil as specified in 2.3.3(b)(i) above.

(2) opening up of protection covers.

(3) inspection of power transmission gear, bearings, visible parts of shafts and general condition of housing internally. Gear clearance and axial play of bearings shall be measured.

(4) examination of controllable pitch mechanism oil transmission system and feedback system.

(5) full stroke ahead and astern are to be verified and correct blade position feed-back and indication verified.

(6) examination of steering column and related sealing and bearing.

(7) running test at MCR (max continuous rating).

(iii) Inboard parts of the thruster accessible from the inside, such as drive motors, shafting system, gear transmissions, pumps and piping systems, alarm, safety and control systems are covered by the class surveys of machinery. This will be applicable for e.g. Voith-Schneider and pump type thrusters.

(iv) Outboard parts of the thruster, accessible from the outside, are to be externally examined during the bottom surveys.

(v) If the thruster is overhauled at the time of the complete survey, NDT for TIFF (tooth interior fatigue fracture) shall be carried out according to maker's requirements and acceptance criteria. If the thruster is overhauled during the interval between two scheduled surveys, satisfactory documentation for NDT (TIFF) performed according to maker's requirements and acceptance criteria is to be submitted to the attending Surveyor at the next survey. Mounting of the thruster on board is to be verified and function tested.

(c) Waterjet units

Waterjet units for main propulsion purposes, including the impeller, casing, shaft, shaft seal, shaft bearing, inlet and outlet channels, steering nozzle, reversing arrangements, and control gear are to be surveyed at intervals not exceeding 5 years, provided the impeller shafts are made of approved corrosion-resistant material or have approved equivalent arrangements. They are to be generally examined so far as practicable. Dismantling may be required to the extent found necessary by the Surveyor.

2.3.4 Propeller shaft condition monitoring **(PCM)**

Where oil lubricated propeller shaft arrangements with approved oil glands are fitted and the requirements of 2.3.5 of Part I of the Rules for Steel Ships are complied with, the class notation **PCM** may be assigned.

2.3.5 Survey in place

The scope of a surveys of propeller shafts and tube shafts in place consists of:

(a) Checking of the clearances of the stern tube shafts,

(b) Examination of propeller,

(c) Where a controllable pitch propeller is fitted, it is to be ascertained that the pitch control device is in good working order, and if considered necessary, the device is to be opened up for further examination.

2.3.6 Wear-down Limits

(a) The after water-lubricated bearing other than rubber is to be rebushed when clearance has reached the maximum allowable wear-down limit as follows:

	Machinery amidship: C	Machinery after: C
D ≤ 230	6.4 mm	4.8 mm
230 < D ≤ 305	8.0 mm	6.4 mm
305 < D	9.5 mm	8.0 mm
D = Diameter of propeller shaft, in mm. C = Max. allowable wear-down limit, in mm.		

(b) Water lubricated rubber bearing are to be rebushed when any water groove is 50% of the original depth, or whenever the clearance exceeds the limits as given in (a) above for water-lubricated bearings other than rubber, whichever occurs first.

2.4 Boiler Survey and Thermal Oil Heater Surveys

2.4.1 Boiler surveys

(a) At each survey, boilers, superheaters, and economizers are to be examined internally and externally in cleaned condition, including seat buffers and stays, if provided.

(b) Boiler mountings including safety valves are to be examined and opened up for further examination if deemed necessary by the Surveyor. Safety valves are to be set as the requirements in Part V of the Rules for Steel Ships. All studs fastening directly to boiler shells or heads, if provided, are to be examined.

(c) In case the dimensions of boiler plates, tubes and stays are required to be ascertained, an efficient non-destructive examination is to be carried out. The allowable working pressure may be required to reduce from its designed working pressure if the dimension is found to be undersized due to corrosion or waste.

Boiler safety valve relieving gear (easing gear) is to be examined and tested to verify satisfactory operation. This test is to be carried out prior to any safety valve operation or setting test under steam

For waste heat boilers, if steam cannot be raised at port, the safety valves may be tested and set by the Chief Engineer at sea, and the results recorded in the log book for review by the Surveyor.

(d) The oil fuel burning system together with its safety appliances, valves, control gears, oil discharge pipes between pumps and burners are to be examined under working condition.

(e) Automatic combustion control devices, if provided, are to be tested under working condition.

(f) In case an important repair carried out or if deemed necessary by the Surveyor, the hydraulic test may be required.

Note: Hydraulic test pressures are as follows:

Boiler's age	Test pressure	Remarks
Age < 12 years	$P = 1.25\ P_o$	$P_o \leq 4$ MPa
	$P = 1.2\ P_o + 0.2$	$P_o > 4$ MPa
Age ≥ 12 years	$P = 1.15\ P_o$	

P_o is the working pressure.

(g) In fired boilers employing forced circulation, the pumps used for this service are to be opened and examined at each boiler survey.

(h) Annual Examination

External examination of boilers including test of safety and protective devices, and test of safety valve using its relieving gear, is to be carried out within the window of the Annual Survey of the ship.

(i) Survey extensions

An extension may be granted by the Surveyor after the following is satisfactorily carried out:

(i) External examination of the boiler

(ii) Boiler safety valve relieving gear (easing gear) is to be examined and operationally tested

(iii) Boiler protective devices (alarms and shutdowns) operationally tested

(iv) Review of the following records since the last Boiler Survey:

Operation record, maintenance record, repair history record and feedwater chemistry record.

(j) Auxiliary Boiler Alternative Survey Program

Ships with an approved program of Preventative Maintenance will be given special consideration for an alternative survey program of auxiliary boilers at the first Boiler Survey carried out during each 5-year Special Survey period. The Boiler Survey carried out in conjunction with the Special Survey is not eligible for the alternative survey program.

2.4.2 Thermal Oil Heater Surveys

(a) Thermal oil plants are to be subjected to functional tests, while in operation.

(b) The following items are to be examined:

(i) The entire thermal oil plant for leakage.

(ii) The condition of the insulation.

(iii) The functioning of the indication, control and safety equipment.

(iv) Remote controls for the shut-off and discharge valves.

(v) Leakage monitors for heaters (for exhausting gas heating).

(vi) The testing of safety devices.

(c) Heating surfaces and, where appropriate, the combustion chamber, are to be examined for contamination, corrosion, deformations and leakage.

(d) As a rule, tightness tests are to be carried out to the admissible working pressure.

2.5 Annual Surveys

2.5.1 Annual Surveys - hull

At each Annual Survey, the general condition of hull and equipment is to be examined so far as can be seen and placed in satisfactory condition as necessary, attention being paid to the following items:

(a) Examination of weather decks, ship side plating above water line, hatch covers and coamings and watertight penetrations.

(i) Confirmation is to be obtained that no unapproved changes have been made to the hatch covers, hatch coamings and their securing and sealing devices since the last survey, where applicable.

(ii) Checking the satisfactory condition of hatch cover, hatch coaming plating and their stiffeners, where applicable.

(iii) Examination of the weld connection between air pipes and deck plating.

(iv) External examination of all air pipe heads installed on the exposed decks.

(v) Examination of flame screens on vents to all bunker tanks.

(vi) Examination of ventilators, including closing devices, if any.

(b) Suspect Areas and Examination of Ballast Tanks

(i) Suspect Areas identified at previous surveys are to be examined. Thickness measurements are to be taken of the areas of substantial corrosion and the extent of thickness measurements is to be increased to determine areas of substantial corrosion. Table I 2-3 may be used as guidance for these additional thickness measurements. These extended thickness measurements are to be carried out before the annual survey is credited as completed.

(ii) Examination of ballast tanks when required as a consequence of the results of the Special Survey and Intermediate Survey is to be carried out. When considered necessary by the surveyor, or where extensive corrosion exists, thickness measurement is to be carried out. If the results of these thickness measurements indicate that Substantial Corrosion is found, then the extent of thickness measurements is to be increased to determine areas of substantial corrosion. Table I 2-3 may be used as guidance for these additional measurements. These extended thickness measurements are to be carried out before the annual survey is credited as completed.

(c) Protection of other openings

(i) Hatchways, manholes, and scuttles in freeboard and superstructure decks.

(ii) Machinery casings, fiddley covers, companionways and deckhouses protecting openings in freeboard or enclosed superstructure decks.

(iii) Portlights together with deadcovers, cargo ports, bow or stern access, chutes and similar openings in ship's sides or ends below the freeboard deck or in way of enclosed superstructures.

(iv) Ventilators, air pipes together with flame screens, scuppers and discharges serving spaces on or below the freeboard deck.

(v) Watertight bulkheads, bulkhead penetrations and wall of enclosed superstructure.

(vi) Weather-tight and watertight doors and closing appliances for all of the above including proper operation of such doors.

(d) Freeing ports together with bars, shutters and hinges.

(e) Protection of the crew

Guard rails, lifelines, gangways, accommodation ladders with accessory wires, winches and gears and deck houses accommodating crew.

(f) Verification of loading guidance and stability data

(i) For ship provided with the loading manual continuous such means in ready use, where applicable.

(ii) Confirmed that an approved stability booklet is kept on board for ready use.

(g) Verification that no alterations have been made to the hull or superstructures which would affect the calculation determining the position of load lines. The load line marks (see Appendix 2) are to be sighted, found plainly visible, and recut and/or painted as required. Surveys carried out by the National Authorities of the countries in which the ships are registered may be accepted as meeting these requirements.

(h) Anchoring and mooring equipment including the working test of windlass.

(i) Bow doors, inner doors, side shell doors and stern doors are to be surveyed as per Annual Survey, if any, see IACS UR Z24-4.

(j) Fire protection and fire fighting arrangements including operation tests as far as practicable

Confirmation as far as practicable, that no significant changes have been made to the arrangement of structural fire protection is also to be carried out. Surveys carried out by the National Authorities of the countries in which the ship are registered may be accepted as meeting these requirements.

(k) Additional requirements for navigational arrangements for periodical one man watch, and where applicable integrated bridge system. Annual Surveys are to be carried out to ascertain that the equipment and arrangements required for the applicable class notation are being maintained in good working order. At the time of the survey relevant statutory certificates may be accepted as evidence of satisfactory operation.

(l) Helicopter deck

Where areas of the ships are designated for helicopter operations, the helicopter deck, deck supporting structure, deck surface, deck drainage, tie downs, markings, lighting, wind indicator, securing arrangements where fitted and safety netting or equivalent are to be examined.

(m) Ship constructed of Fiber Reinforced Plastics (FRP)

In addition to the applicable requirements of the annual survey - hull is also to include the following:

(i) All accessible parts particularly liable to rapid deterioration.

(ii) The deck to hull connection, and superstructure and deckhouse connections to the deck.

2.5.2 Annual Survey – machinery

At each Annual Survey, the following requirements are to be complied with:

(a) At each Annual Survey, a general examination of the propelling machinery and essential auxiliaries, is to be made. The Surveyor may in addition, require such further items to be opened up as considered necessary to ascertain that they are in good working condition.

(b) Machinery and boiler spaces with particular attention to the fire and explosion hazards, and also emergency escape routes are to be generally examined.

(c) All main and auxiliary steering gears including their associated and control systems are to be examined and tested in operation.

(d) All the means of communication between the navigation bridge and the machinery control position, as well as the bridge and the alternative steering position, if fitted, are to be tested.

(e) Bilge pumping systems and bilge wells including operation of pumps, remote reach-rods and level alarms, where fitted, are to be examined as far as practical.

(f) Boilers, thermal oil heaters heated by flame or combustion gas, pressure vessels and their mountings including safety devices, foundations, controls, releasing gear, high pressure and steam escape piping, insulation and gauges are to be externally examined. Confirmation of the safety devices of the boilers and the thermal oil heaters may be required as considered necessary by the Surveyor.

In addition, boilers are to be examined in accordance with 2.4.1(h) of this Chapter.

(g) Electrical machinery, emergency sources of electrical power switchgear and other electrical equipment are to be generally examined and also to be tested in operation as far as practicable.

(h) Confirmation as far as practicable of the operation of all emergency sources of power is to be made. If they are automatic, also in the automatic mode.

(i) Where automatic and/or remote controls are fitted for essential machinery, they are to be tested to demonstrate that they are in good working condition.

(j) Parts which are opened up for maintenance at Owner's option are to be examined as necessary.

(k) For hydraulic power units, hoses, piping for any damage, corrosion or leakages, and hydraulic oil cooling system condition and operation are to be checked. Operational test of all emergency stops, controls and remote controls are also to be checked.

2.5.3 Annual Survey – **CAS**, **CAU** and **CAB**

The following performances are to be made and placed in order. Where appropriate records of daily checks and periodical maintenance have been kept, some of the tests may be dispensed with at the Surveyor's discretion.

(a) Safety devices for main propulsion machinery or controllable pitch propellers, and emergency stopping devices for main propulsion machinery fitted in the remote control station for the main propulsion machinery or controllable pitch propellers.

(b) Safety devices for boilers.

(c) Safety devices for electric generating sets.

(d) Communication system specified in 2.5.9 in Part VII of the Rules for Steel Ships.

2.5.4 Annual Survey - marine oil pollution prevention installations

Marine oil pollution prevention installations including operation tests as far as practicable are to be surveyed according to the IMO Resolution A.1053(27) - Guidelines for Surveys under Annex I of MARPOL 73/78 with its amendments. Surveys carried out by the National Authorities of the countries in which the ships are registered may be accepted as meeting these requirements.

2.6 Intermediate Surveys

2.6.1 A survey planning meeting is to be held prior to the commencement of the survey.

2.6.2 Concurrent crediting to both Intermediate Survey (IS) and Special Survey (SS) for surveys and thickness measurements of spaces are not acceptable.

2.6.3 At each Intermediate Survey for hull, in addition to all the requirements for annual survey in 2.5, the following additional applicable requirements are also to be complied with:

(a) For ships between 5 and 10 years of age, a general, internal examination of representative ballast tanks is to be carried out. If there is no hard protective coating, soft or semi-hard coating, or POOR coating condition, the examination is to be extended to other ballast spaces of the same type.

(b) For ships over 10 years of age, a general, internal examination of all spaces used for water ballast is to be carried out.

(c) If such examinations, in (a) and (b) above, reveals no visible structural defects, the examination may be limited to a verification that the coatings remain efficient.

(d) For ballast tanks, excluding double bottom tanks, if there is no hard protective coating, soft or semi-hard coating or Poor coating condition and it is not renewed, the spaces in question are to be internally examined at annual intervals.

(e) When such conditions, in (d) above, are found in water ballast double bottom tanks, the spaces in question may be internally examined at annual intervals.

2.6.4 Intermediate Survey – machinery

(a) At each Intermediate Survey, all the requirements for Annual Survey are to be complied with.

2.6.5 Intermediate Survey – marine oil pollution prevention installations

Marine oil pollution prevention installations including operation tests as far as practicable are to be surveyed according to the IMO Resolution A.1053(27) – Guidelines for Surveys under Annex 1 of MARPOL 73/78 with its amendments. Surveys carried out by the National Authorities of the countries in which the ship are registered may be accepted as meeting these requirements.

2.7 Special Surveys

Procedures for class related services, see 2.1.4 of this Chapter.

Provision for surveys, see 2.1.5 of this Chapter.

A Survey planning meeting is to be held prior to the commencement of the survey.

Concurrent crediting to both Intermediate Survey (IS) and Special Survey (SS) for surveys and thickness measurements of spaces are not acceptable.

2.7.1 Special Survey - hull

All Annual Survey requirements together with the following are to be complied with:

(a) The examinations of the hull are to be supplemented by thickness measurements and testing as required in 2.7.1(j) and 2.7.1(k), to ensure that the structural integrity remains effective. The aim of the examination is to discover Substantial Corrosion, significant deformation, fractures, damages or other structural deterioration, that may be present.

(b) A bottom survey in dry dock in accordance with the requirements of 2.2.1 of this Chapter is to be carried out as part of the Special Survey.

(c) The anchors and chain cables are to be ranged, examined and the required complement and condition verified. The chain locker holdfasts, hawse pipes and chain stoppers are to be examined and pumping arrangements of the chain locker tested.

At Special Survey No. 2 and subsequent Special Surveys, chain cables are to gauged and renewed in cases where their mean diameter is 12% worn below the requirement limits allowed by the Society.

(d) All spaces including holds and their ‘tween decks where fitted; double bottom, deep, ballast, and peak tanks; pipe tunnels, duct keels, machinery spaces, dry spaces, cofferdams and voids are to be internally examined including the plating and framing, bilges and drain wells, sounding, venting, pumping and drainage arrangements.

Internal examination of fuel oil, lube oil and fresh water tanks is to be carried out in accordance with Table I 2-1.

At Special Survey No.3 and subsequent Special Surveys, structural downflooding ducts and structural ventilation ducts, where applicable, are to be internally examined.

(e) Engine room structure is to be examined. Particular attention is to be given to tank tops, shell plating in way of tank tops, brackets connecting side shell frames and tank tops, and engine room bulkheads in way of tank top and bilge wells. Particular attention is to be given to the sea suctions, sea water cooling pipes and overboard discharge valves and their connections to the shell plating. Where wastage is evident or suspect, thickness measurements are to be carried out, and renewals or repairs made when wastage exceeds allowable limits.

(f) Where provided, the condition of corrosion prevention system of ballast tanks is to be examined. For ballast tanks, excluding double bottom tanks, where a hard protective coating is found in POOR condition without dealing with is found, where soft or semi-hard coating has been applied, or where a hard protective coating was not applied from time of construction, the tanks in question are to be examined at annual intervals. Thickness measurements are to be carried out as deemed necessary by the Surveyor.

(g) When such breakdown of hard protective coating is found in double bottom ballast tanks and it is not renewed, where a soft or semi-hard coating has been applied, or where a hard protective coating was not applied from the time of construction, the tanks in question may be examined at annual intervals. When considered necessary by the surveyor, or where extensive corrosion exists, thickness measurements are to be carried out.

(h) Extent of Tank Testing

(i) Boundaries of double-bottom, deep, ballast, peak, and other tanks are to be tested with a head of liquid to the top of air pipes.

(ii) Boundaries of fuel oil, lube oil and fresh water tanks are to be tested with a head of liquid to the highest point that liquid will rise under service conditions.

(iii) Tank testing of fuel oil, lube oil and fresh water tanks may be specially considered based on a satisfactory external examination of the tank boundaries, and a confirmation from the Master stating that the pressure testing has been carried out according to the requirements with satisfactory results. The Surveyor may extend the testing as deemed necessary.

(i) Hatch covers and coamings are to be surveyed. as follows:

(i) A thorough inspection of the items listed in 2.5.1(a), including hatch cover plating and hatch coaming plating, where applicable, is to be carried out.

(ii) Checking of the satisfactory operation of all mechanically operated hatch covers is to be made, where applicable, including:

(1) Storage and securing in open condition;

(2) Proper fit and efficiency of sealing in closed condition;

(iii) Checking the effectiveness of sealing arrangements of all hatch covers by hose testing or equivalent is to be carried out.

(j) Thickness measurements are to be carried out in accordance with Table I 2-2. The Surveyor may extend the thickness measurements as deemed necessary. When thickness measurements indicate substantial corrosion, the extent of thickness measurements is to be increased to determine areas of substantial corrosion. Table I 2-3 may be used as guidance for these additional thickness measurements. These extent of thickness measurements are to be carried out before the survey is credited as completed. The wastage allowances are as given in Table I 2-5 ~ 2-7.

(k) All bilge and ballast piping systems are to be examined and operationally tested to working pressure to attending Surveyor's satisfaction to ensure that tightness and condition remain satisfactory.

(l) For all ships, automatic air pipe heads are to be completely examined (both externally and internally) as indicated in Table I 2-4.

For designs where the inner parts cannot be properly inspected from outside, this is to include removal of the head from the air pipe. Particular attention is to be paid to the condition of the zinc coating in heads constructed from galvanized steel.

(m) When spaces are insulated in connection with refrigeration, hatches and limbers are to be removed and the condition of the structural members examined.

(n) Gangways, accommodation ladders with accessory wires, winches and gears are to be load tested and operationally tested with maximum operational load.

(o) Bow doors, inner doors, side shell doors and stern doors, where applicable, are to be surveyed as per Special Survey, see IACS UR Z24-3.

2.7.2 Special Survey–machinery

(a) Pumps and the pumping system including valves, cocks, pipes and strainers are to be examined. For hydraulic power units, records of hydraulic oil replacement are to be checked. Oil samples for analysis may be required at the discretion of the Society. Other systems are to be tested if considered necessary.

(b) All shafts (except propeller and stern tube shafts which are detailed in propeller shaft survey), thrust blocks, line shaft bearings are to be opened up for examination. The lower halves of bearings need not be exposed if alignment and wear are found acceptable.

(c) Steering machinery including auxiliary arrangement is to be examined and operation tested. The machinery may be opened up for examination if deemed necessary by the Surveyor.

(d) Holding down bolts and chocks of main and auxiliary engines and shafting bearing blocks are to be examined.

(e) All air vessels for essential services, together with their mountings, valves and safety devices, are to be cleaned internally, and examined internally and externally. If internal examination of the air vessels is not practicable, they are to be tested hydraulically to at 1.25 times the working pressure. Safety valves setting are to be checked.

(f) Fuel tanks which do not form part of ship's structure together with their fittings are to be examined and, if deemed necessary by the Surveyor, they are to be tested as specified for new tanks.

(g) The reduction gears are to be examined, and opened up if deemed necessary by the Surveyor, in order to confirm the condition of the gears, pinions, gear teeth, spiders, shafts, bearings and lubrication system. Alternative means of accertaining the condition of epicyclic gearing will be specially considered.

(h) The machinery and heat exchangers which are not included in the boiler survey requirements are to be examined and opened up for further examination if deemed necessary by the Surveyor.

(i) The windlass and mooring winches are to be examined including operation test. They are to be opened up for examination if deemed necessary by the Surveyor.

(j) The bilge system including valves, cocks, strainers and bilge injections are to be opened up for examination if deemed necessary by the Surveyor. The system is to be tested in working condition.

(k) Air compressor of essential services is to be examined. Safety valve setting is to be checked.

(l) Evaporators are to be opened up and examined. Safety valve settings are to be checked.

(m) Main and auxiliary engines are to be tested in working condition if deemed necessary by the Surveyor.

(n) Engine room remote control quick closing valves are to be opened up, examined and tested in working condition.

(o) Feed pumps, burning pumps and boiler water circulating pumps for boilers are to be opened up and examined.

(p) Steam turbines

In addition to the foregoing items (a) to (o) of 2.7.2 above, steam turbines used as main and auxiliary engines are to be examined as follows:

(i) Steam turbine blades, rotors, stop valves, shafts glands, thrust and adjusting bearings together with oil drains and sealing pipes are to be examined.

(ii) Exhaust steam turbines, gears, clutches, and electric motors are to be opened up and examined; coned ends of internal driving shafts are to be examined.

(iii) For main steam pipes, a selected section is to be removed and examined when they are 12 years old and thenceforth at each Special Survey. Sufficient lagging is to be removed for examination and hydraulically tested to twice the working pressure. When deemed necessary by the Surveyor the thickness of pipes is to be ascertained to determine the future working pressure.

(iv) Condensers are to be examined and tested if repaired.

(v) Safety devices are to be examined and tested.

(q) Diesel engine

(i) In addition to the foregoing items (a) to (o) of 2.7.2 above, diesel engines used as main and auxiliary engines are to be examined as follows:

Cylinders, covers, valves and valve gears, pistons, piston rod, crossheads, guides, connecting rods, crankshafts and all bearings, crankcases, bed-plates, entablatures, crankcase door fastenings and explosion relief devices, scavenge pumps, scavenge blowers, superchargers and their associated coolers, air compressors and their intercoolers, filters and/or separators and safety devices, fuel injection pumps and fittings, camshaft drives and balancer units, torsional vibration dampers or de-tuners, flexible couplings, clutches, reverse gears, attached pumps and cooling arrangements are to be examined.

Special consideration as to the requirements for Special Surveys may be given for diesel engines with bores 300 mm or under, provided the engine is maintained under a manufacturer's scheduled maintenance program.

(1) The records of the program, including lubrication servicing, are to be made available to the Surveyor. Periodical overhauls, required by the manufacturer's scheduled maintenance program, are to be witnessed by the Surveyor.

(2) For ships not engaged in international voyages, the survey may be carried out by reviewing the records of the program and other effective means, such as the verification runs specified in (s) of 2.7.2 below, to confirm that engines are in good order. Periodical overhauls, required by the manufacturer's scheduled maintenance program, are to be witnessed by the Surveyor.

(ii) Tie rods are to be re-tensioned, as necessary. Engine entablature bolting is to be checked for tightness, and crankshaft deflections of medium-speed and low-speed type engines are to be measured and placed in good order.

(r) Electrical installations.

(i) The survey is to comprise examination of the electrical installation with regard to fire and explosion hazards and injury from accidental touching. The survey is also to include testing of correct functioning of equipment covered by the requirements of the Rules.

(ii) As far as practicable, the following equipment is to be examined for satisfactory condition:

(1) Main and emergency switchboards.

(2) Generators.

(3) Distribution boards.

(4) Motor starters.

(5) Electrical motors.

(6) Converters (e.g. transformers, rectifiers, chargers).

(7) Cable installations.

(8) Enclosures for electrical equipment.

(9) Lighting equipment.

(10) Heating equipment.

(11) Battery installation.

(iii) The following are to be tested to the extent deemed necessary by the Surveyor to ascertain the proper functioning of the equipment:

(1) Generator load test.

(2) Generator parallel operation.

(3) Generator protection relays.

(4) Generator remote speed control.

(5) Generator synchronizing equipment.

(6) Power plant interlocking systems.

(7) Insulation resistance indicating device.

(8) Emergency generator including switchboard.

(9) Battery chargers.

(10) Mechanical ventilation of battery rooms /lockers.

(11) Navigation lights, with controllers including alarms.

(iv) Measurements of insulation resistance on main and emergency switchboards, generators, exciters, propulsion motors if the ship is of electrical propulsion and all electrical installations and their wiring are to be performed as follows:

Part to be tested	Insulation resistance	
Switchboard with all out-going circuit breakers and switches opened, and control and measuring instrument disconnected	Between each busbar, and busbar to hull	1 megohm
Generator and motor	Each generator or motor to hull	1,000 times the rated voltage of the machine in ohms
All wiring measured from switchboard with circuit breakers and protective devices closed, except those of the generator	Between each conductor and conductor to hull	100,000 ohms

(v) Tests of emergency stopping means of all oil transfer systems, and boiler and engine room ventilations are to be performed.

(vi) For the main electric propelling machinery, windings, commutators and slip-rings, all air ducts in stator coil and ventilating holes in rotors are to be examined.

(s) Machinery verification runs for ships not engaged in international voyages

As part of the Special Survey of Machinery, a dock trial in the presence of the Surveyor is to be carried out in order to confirm satisfactory operation of main and auxiliary machinery. A sea trial may be carried out if deemed necessary by the Surveyor.

If significant repairs are carried out to main or auxiliary machinery or steering gear, consideration should be given to a sea trial to the satisfaction of the Surveyor.

2.7.3 Special Survey – **CAS**

The following are to be performance tested and placed in order:

(a) Main propulsion machinery and controllable pitch propellers

(i) Change-over devices of control positions between main control station and local control station.

(ii) Safety devices.

(b) Boilers

(i) Automatic and remote control systems.

(ii) Safety devices.

(c) Electric generating sets

(i) Automatic and remote control systems.

(ii) Safety devices.

(d) Automatic change-over devices (or remote start/stop devices) of essential pumps and automatic starting devices (or remote start/stop devices) of air compressors.

(e) Alarm systems

(i) Function of alarm systems and indicator devices.

(ii) Confirmations of setting points of alarms.

(f) Remote control and monitoring systems

2.7.4 Special Survey – **CAU**, **CAB**

The following are to be performance tested and placed in order:

(a) Main propulsion machinery and controllable pitch propellers
  (i) Change-over devices of control positions between navigation bridge and main control station and between main control station and local control station, or between main monitoring and control station on bridge and local station or sub-control station.
  (ii) Safety devices.

(b) Boilers
  (i) Automatic and remote control systems.
  (ii) Safety devices.

(c) Electric generating sets
  (i) Automatic and remote control systems.
  (ii) Safety devices.
  (iii) Automatic start of stand-by power supply unit after black-out, where applicable.

(d) Automatic change-over devices of essential pumps and automatic starting devices (or remote start/stop devices) of air compressors.

(e) Communication systems specified in 2.9 of Part VIII of the Rules for Steel Ships.

(f) Alarm systems
  (i) Function of alarm systems and indicator devices.
  (ii) Confirmations of setting points of alarms.

(g) Remote control and monitoring systems
  Where considered necessary by the Surveyor, sea trials may be required upon completion of the above mentioned tests.

2.7.5 Special Survey – marine oil pollution prevention installations

Marine oil pollution prevention installations including operation tests as far as practicable are to be surveyed according to the IMO resolution A.1053(27) – Guidelines for Surveys under Annex I of MARPOL 73/78 with its amendments. Surveys carried out by the National Authorities of the countries in which the ships are registered may be accepted as meeting these requirements.

2.8 Classification Survey of Ships not Built under Survey

2.8.1 The following drawings and documents, necessary for classification purpose, are to be submitted as far as practicable together with the application for classification:

(a) Hull
  (i) General arrangement.
  (ii) Mid-ship section.
  (iii) Scantling profile and deck plans.
  (iv) Shell expansion.
  (v) Capacity plan.
  (vi) Piping and pumping diagrams.
  (vii) Rudder and stern frames.
  (viii) Data of chain cable and anchor.
  (ix) Lines and hydrostatic curves (if freeboard assignment is required).

(x) Loading and stability information (i.e. loading manual).

(xi) Outfitting arrangement of ship's side fittings.

(b) Machinery

(i) Engine room arrangement.

(ii) Piping system in engine room.

(iii) Detail and arrangement of propulsion shafting.

(iv) Machinery particulars.

(v) General arrangement of electric equipment.

(vi) Electric wiring diagram of power, lighting and interior communication system.

(vii) Electric equipment particulars.

(viii) Main switchboard.

(c) **CAS/CAU/CAB**

(i) Machinery arrangement plans showing location of control stations in relation to controlled units.

(ii) Arrangements and details of control consoles including front view, installation arrangements together with schematic diagrams for all power, control and monitoring systems including their functions.

(iii) Kinds and sizes of all electrical cables and wiring associated with control systems including voltage rating, service voltage and currents together with overload and short circuit protection.

(iv) Schematic plans of hydraulic and pneumatic control systems together with all interconnections, piping sizes and materials including working pressures and relief valve settings.

(v) Description of all alarms and emergency tripping arrangements, functional sketches or description of all special valves, actuators, sensors and relays.

(vi) Schematic plans and supporting data of fire protection and extinguishing systems, including fire detection and alarm system, bilge high water level alarms.

2.8.2 Ships without classification

For the ships which have not been classed with any other Classification Society, all surveys to the extent as specified in the Rules, are to be carried out by the Surveyor who is to take into account the age, the standard of construction, the past maintenance, and the present status of the ships concerned.

2.8.3 Ships with classification

If the ship keeps the Class of another recognized Classification Society with sufficient status, in general, a survey to the extent of the Special Survey corresponding to the ship's age is to be conducted except the ship being within 3 months of the due date of Special Survey. Some Special Survey items may be omitted by the Surveyor in view of the ship's condition. In such case, the period of class is to remain as assigned by the previous Classification Society.

2.8.4 Subsequent surveys

Subsequent surveys are to be carried out as in the case of ships built under survey.

2.9 Hull Surveys of Ships for FRP and Aluminum Alloys Construction

2.9.1 Annual Survey

(a) For ships of Fiber Reinforced Plastic (FRP) Construction, in addition to the applicable requirements of 2.5 of this Part, the Annual Survey - Hull is to include the following:

(i) All accessible parts particularly liable to rapid deterioration.

(ii) The ship is to be placed in drydock or slipway and all applicable items of the Annual Survey - Hull are to be examined.

(iii) The deck-to-hull connection, and superstructure and deckhouse connections are to be examined.

(iv) The ship is to be thoroughly checked and sounded for any apparent delaminations.

Where it is thought a delamination is found, a 50 mm diameter plug is to be removed from the area and examined for core to skin adhesion and water permeation.

(b) For ships of Aluminum Alloys Construction, in addition to the applicable requirements of 2.5 of this Part, the Annual Survey - Hull is to include the following:

(i) All parts liable to rapid deterioration, particularly areas adjacent to dissimilar metals which are in close proximity.

(ii) In lieu of ballast tanks and combined cargo/ballast tanks, internal structure of a randomly selected cargo space, dry or liquid, together with any other space deemed necessary by the Surveyor, with particular attention to be given to bilges and drain wells.

(c) For ships subject to HSC Code, in addition to the applicable requirements of 2.5 of this Part, Bottom Survey in dry dock is to be a part of the Annual Survey as required by 2.2.1 of this Part.

2.9.2 Special Survey

In addition to the Annual Survey in 2.9.1 above and the applicable requirements of Special Survey in 2.7 of this Part, the Special Survey is to include the following:

(a) Requirements for ships of Fiber Reinforced Plastic (FRP) Construction

(i) Engine foundations and their attachments to the hull are to be examined.

(ii) A minimum of five plugs, each 50.8 mm in diameter, are to be removed from the hull bottom and topsides from locations deemed appropriate from the attending Surveyor and examined for core to skin adhesion and water permeation.

(iii) The framing and holds, hull laminate of the tween deck, deep tanks, peaks, bilges and drain wells, and machinery spaces are to be cleaned and examined. Linings, ceiling, tanks, andportable ballast are to be removed as considered necessary by the attending Surveyor.

(iv) Where there is evidence of cracking, distortion, wetness, or delamination, destructive or nondestructive testing and removal and repair of the defect is subject to the discretion of the attending Surveyor.

(v) The hull, fastenings, and backing reinforcements in way of hull fittings and attachments are to be examined. Fastenings are to be withdrawn as considered necessary by the attending Surveyor.

(vi) The efficiency of hand pumps or other drainage arrangements for end spaces is to be tested.

(vii) Additionally for Sailing and Unpowered Ships, where applicable, ballast-keel fastenings and all openings to the sea, including sanitary and other overboard discharges, together with the cocks and valves connected therewith, are to be examined while the ship is in drydock.Mast foundation and connection to the hull are to be examined.

(b) Requirements for ships of Aluminum Alloys Construction

In addition to the applicable requirements of Special Survey in 2.7, particular attention is to be given to insulation material in joints of shell connections between dissimilar metals, which is to be found or made effective as necessary.

Table I 2-1
Minimum Requirements for Internal Examination
at Hull Special Surveys of Fuel Oil, Lube Oil and Fresh Water Tanks

Spaces and Tanks (1),(2),(3)	SS No. 1 (Age ≤ 5)	SS No. 2 (5 < Age ≤ 10)	SS No. 3 (10 < Age ≤ 15)	SS No. 4 and Subsequent (15 < Age)
Fuel oil bunker tanks				
- Engine room	0	0	1	1
- Cargo length area	0	1	2(4)	Half, minimum 2(4)
- If no tanks in Cargo Length Area, or without defined cargo spaces, additional fuel tank(s) outside of Engine Room, (if fitted)	0	1	1	2
Lube oil	0	0	0	1
Fresh water	0	1	All	All

Notes:

(1) These requirements apply to tanks of integral (structural) type.

(2) If a selection of tanks is accepted to be examined, then different tanks are to be examined at each Special Survey, on a rotational basis.

(3) Peak tanks (all uses) are subject to internal examination at each Special Survey.

(4) At Special Surveys No. 3 and subsequent surveys, 1 deep tank for fuel oil in the cargo length area is to be included, if fitted.

Table I 2-2
Minimum Requirements for Thickness Measurements at Hull Special Surveys

SS No. 1 (Age ≤ 5)	SS No. 2 (5 < Age ≤ 10)	SS No. 3 (10 < Age ≤ 15)	SS No. 4 and Subsequent (15 < Age)
1. Suspect Areas throughout the ship	1. Suspect Areas throughout the ship	1. Suspect Areas throughout the ship	1. Suspect Areas throughout the ship
	2. One transverse section of deck plating in way of a cargo space within the amidship 0.5L(5)	2. Two transverse sections within the amidship 0.5L in way of 2 different cargo spaces(5)	2. A minimum of 3 transverse sections in way of cargo spaces within the amidship 0.5L(5)
		3. Internals in forepeak and after peak ballast tanks	3. Internals in forepeak and after peak ballast tanks
		4. All cargo hold hatch covers and coamings (plating and stiffeners)	4. All cargo hold hatch covers and coamings (plating and stiffeners)
			5. All exposed main deck plating full length
			6. Representative exposed superstructure deck plating (poop, bridge, and forecastle deck)
			7. Lowest strake and strakes in way of 'tween decks of all transverse bulkheads in cargo spaces together with internals in way(5)
			8. All wind- and water strakes, port and starboard, full length
			9. All keel plates full length. Also, additional bottom plates in way of cofferdams, machinery space, and aft end of tanks
			10. Plating of sea chests. Shell plating in way of overboard discharges as considered necessary by the attending Surveyor

Notes:

(1) Thickness measurement locations are to be selected to provide the best representative sampling of areas likely to be most exposed to corrosion, considering cargo and ballast history and arrangement and condition of protective coatings.

(2) Thickness measurements of internals may be specially considered by the Surveyor if the protective coating is in Good condition.

(3) For ships less than 100 meters in length, the number of transverse sections required at Special Survey No. 3 may be reduced to 1, and the number of transverse sections required at Subsequent Special Surveys may be reduced to 2.

(4) For ships more than 100 meters in length, at Special Survey No. 3, thickness measurements of exposed deck plating within amidships 0.5 L may be required.

(5) For ships without defined cargo spaces, thickness measurements are to be taken at the appropriate, most onerous locations selected to provide the best representative sampling of areas likely to be exposed to corrosion the most.

Table I 2-3
Guidance for Additional Thickness Measurements in way of Substantial Corrosion

Structural Member	Extent of Measurement	Pattern of Measurement
Plating	Suspect area and adjacent plates	5 point pattern over 1 m^2
Stiffeners	Suspect area	3 measurements each in line across web and flange

Table I 2-4
Survey Requirements for Automatic Air Pipe Heads at Special Surveys

SS No. 1 (Age ≤ 5)	SS No. 2 (5 < Age ≤ 10)	SS No. 3 and subsequent (10 < Age)
- 2 air pipe heads, 1 port and 1 starboard, located on the exposed decks in the forward 0.25L, preferably air pipes serving ballast tanks. - 2 air pipe heads, 1 port and 1 starboard, on exposed decks, serving spaces aft of 0.25L, preferably air pipes serving ballast tanks. (1), (2)	- All air pipe heads located on the exposed decks in the forward 0.25L. - At least 20% of air pipe heads on the exposed decks serving spaces aft of 0.25L, preferably air pipes serving ballast tanks. (1), (2)	- All air pipe heads located on the exposed decks. (3)

Notes:

(1) The selection of air pipe heads to be examined is left to the attending Surveyor.

(2) According to the results of this examination, the Surveyor may require the examination of other heads located on the exposed decks.

(3) Exemption may be considered for air pipe heads where there is substantial evidence of replacement after the last Special Survey.

Table I 2-5
Individual Wastage Allowances for Steel Ships, 90 m ≤ L (5), (6)

Ordinary and High Strength Steel	Ships of all ages with transverse framing	Ships of all ages with a combination of transverse and longitudinal framing.
Strength Deck Plating	25%	20%
Continuous Long'l Hatch Coamings & Above Deck Box-Girders	25%	20%
Deck Plates within Line of Hatches and at Ends.	30%	30%
Forecastle, Poop and Bridge Deck Plates; Superstructure End Bulkheads	30%	30%
Tween Deck Plates	30%	--
Sheer Strake Plates	25%	20%
Side Shell Plates	25%	25%
Bilge Strake Plates	25%	25%
Bottom Plates	25%	25%
Keel Plates(4)		
Outermost Strake of Inner Bottom	30%	30%
Other Plates of Inner Bottom	30%	30%
Top Strake of Longitudinal Bulkheads and Top Strake of Topside Tank Sloping Plating	25%	25%
Bottom Strake of Longitudinal Bulkheads	25%	25%
Other Plates of Longitudinal Bulkheads, Topside Tank Sloping Plating, Hopper Tank Sloping Plating and Transverse Bulkheads	25%	25%
Internals including Longitudinals, Girders, Transverses, Struts, Bulkhead Webs and Stringers, Brackets and Hatch Side Girders	25%	25%
Plates in way of Top of Tanks	30%	30%
Underdeck Box Girders (Long'l or Transverse)	20%	20%
Hatch Covers, Hatch coamings and brackets	30%	30%

Notes:

(1) Internals included in longitudinal strength must be continuous or be effectively developed at ends, throughout amidships 0.4L.

(2) Structure must meet individual member thickness and average wastage.

(3) If design was originally approved on basis of engineering analysis (such as specialized ships), or if owner specially request, the wastage may be assessed on engineering basis (i.e., acceptable stress levels and structural stability).

(4) Keel plates are to be renewed when they reach the minimum allowed thickness for adjacent bottom plating.

(5) The individual wastage allowances are acceptable, provided the hull girder Section Modulus is not less than 90% of the greater Section Modulus required: a) at the time of new construction or b) Z_{min} by 3.2.2 of Part II of the Rules.

(6) For ships built to other society rules, that Society carrying out the initial plan review is to be contacted for wastage allowances.

Table I 2-6
Individual Wastage Allowances for Steel Ships, L < 90 m

Main Deck Plating	25%
Bottom Plating	25%
Keel Plating	25%
Sheer Strake	25%
Bilge Strake	25%
Side Shell Plating	30%
Forecastle	30%
Internals and Bulkheads	30%

For ships built to other society rules, that Society carrying out the initial plan review is to be contacted for wastage allowances.

Notes:

(1) Internals included in longitudinal strength must be continuous or be effectively developed at ends, throughout amidships 0.4L.

(2) The values shown in the table are the minimum requirements for individual members and plates.

(3) In addition to satisfying the individual member and plate requirements, it should be verified that the hull girder section modulus is not less than 90% of the greater Hull Girder Section Modulus required either:

a) At the time of new construction

b) Z_σ as specified in 3.2.1 of Part XV of the Rules for Steel Ships.

(4) For ships less than 60 m in ship's length only, maximum loss of deck or bottom area is 20% of Rule required area.

(5) For ships built to other Society rules, wastage allowance based on the previous Society requirements may apply.

Table I 2-7
Aluminum Wastage Allowances for Ships, L < 90 m

Main Deck Plating	15%
Bottom Plating	15%
Keel Plating	15%
Sheer Strake	15%
Bilge Strake	15%
Side Shell Plating	20%
Forecastle	20%
Internals and Bulkheads	20%

For ships built to other society rules, that society carrying out the initial plan review is to be contacted for wastage allowances.

Appendix 1
Guidance for Inclining Test

A1.1 General

This annex shows the standard method of inclining test.

A1.2 Preparation for the Test

A1.2.1 Data to be submitted

The following plans are to be available at the time of the test as necessary.

(a) General arrangement drawing.

(b) Tank capacity plan.

(c) Hydrostatic curves.

(d) Draft marks locations

A1.2.2 Inclining test condition

(a) The ship is to be as near to completion in lightweight condition as possible. Equipment used by the yard on board is to be moved outboard as far as possible.

(b) Prior to the inclining test, lists of all items which are to be added, removed, or relocated are to be prepared. These weights and their locations are to be accurately recorded.

(c) The total value of missing weights is not to exceed 2 percent and surplus weights, excluding liquid ballast, fuel oil, diesel oil and fresh water, not exceed 4 percent of the light ship displacement. For smaller ship, higher percentages may be allowed.

(d) All objects are to be secured in their regular positions. All weights which may swing or shift are to be secured in their sea stowage position. If more than one sea stowage positions are possible, the actual stowage position used during the test is to be recorded.

(e) The ship is to be cleared of residues of cargo, tools, debris, scaffolding and snow. Icing of the inner and outer surfaces, the underwater hull included, is not permitted.

(f) Bilge water and liquids accumulated on deck are to be removed in order to exclude an influence on measurements.

(g) Only the persons participating in the inclining test are to be stay on board the ship.

A1.2.3 Tank contents

(a) As a rule, all tanks are to be either full or empty. The number of tanks containing liquids is to be kept to a minimum.

(b) Soundings and density of liquids in tanks are to be taken in tanks containing liquids. Where tanks are partly filled, free surface effect which has an influence on the result of the test is to be estimated from the shape of tanks.

(c) Where tanks are intended to be filled completely, removal of air pockets is to be paid attention. All empty tanks are to be adequately dried.

(d) All connections between tanks are to be closed.

A1.2.4 Mooring arrangements and environmental conditions

(a) Mooring lines are to be free of any transverse tension during the reading. No external moments are to be brought upon the ship from mooring lines. If possible, the ship is to be located in a calm, protected area free from external forces.

(b) The depth of water under the hull is to be sufficient to ensure that the hull will be entirely free of the bottom even if the ship is inclined, taking into account tide differences, if applicable.

(c) The following mooring arrangements are to be referred to as the standard.

(i) A ship is moored by bow and stern lines on both sides of the ship attached at or near the center-line. Longitudinal mooring lines are to be as long as practicable.

(ii) A ship is moored by bow and stern lines on one side only and supplemented by spring lines.

(d) Where a single bow or stern line is proposed, the ship's freedom of movement is to be checked not adversely to effect the conduct of the experiment.

(e) When tidal currents are present the experiment is to be conducted at or around slack tide as far as possible.

(f) The ship's gangway is to be in the stowed position, and any shore gangway is to be removed during the inclining test. Cables, hoses, etc. are as few as possible to be connected to shore. Those which are needed are to be slack.

(g) To carry out the inclining test under the influence of wind and currents may be permitted, provided the accuracy of the test is assured.

A1.2.5 Inclining weights

(a) As a rule, not less than four solid weights are to be used for the inclining test. Use of water ballast transfer to incline the ship may be permitted only in cases where it is impracticable to incline the ship using solid weights.

(b) The solid weights are to be heavy enough to comply with the requirements in A1.3.3(a). Each solid weight is to be almost equal in mass.

(c) Each weight is to be compact, impervious to water. Its center of gravity is to be accurately determined.

(d) Each inclining weight is to be marked with an identification number. The inclining weights are to be weighted with a calibrated instrument to the satisfaction of the Surveyor.

A1.2.6 Measuring devices

(a) In general, not less than two measuring devices, one of which is to be a pendulum or a U-tube, are to be used to determine the ship's inclination.

(b) Where pendulums are used, the pendulums are normally to be long enough to give a measured deflection, to each side of upright, of at least 100 mm, and be suspended at sheltered locations to protect from the wind.

(c) Where U-tubes are used, the length and arrangement of the U-tube is to be such as to ensure the accuracy of its readings.

(d) Where stabilographs are used, the calibration of the instrument are to be verified to the Surveyor's satisfaction prior to the experiment.

A1.2.7 Initial Condition and Stability

(a) The ship is to be preferably upright prior to the inclining. However, an initial list of the ship not exceeding 0.5° is permissible.

(b) Initial trim of the ship is not to exceed 1% of the ship's length.

(c) The persons conducting the test are to be satisfied that the ship has adequate, positive stability and acceptable stress levels during the test.

A1.3 Inclining Test and Record of Data

A1.3.1 Accuracy of data

Measurement of inclining test data is to be as accurate as possible and to the satisfaction of the attending Surveyor.

A1.3.2 Draught and water density measurements

(a) Draught is to be measured at fore, aft and midship draught mark at both sides immediately before the test.

(b) The distance from the draught mark, which is used as a reference point, to base line is to be verified prior to the test.

(c) It is to be ensured that no significant changes have occurred in the condition of the ship during the test.

(d) In case of non-coincidence of separate measuring points, additional measurements are to be taken.

(e) Water samples are to be taken at suitable depth to keep away from surface water which could contain rainwater.

A1.3.3 Weight shifts

(a) Positioning of inclining weights which gives a maximum heeling moment is to result in a minimum heel angle of 1° up to a maximum 4° from upright, depending upon ship type and size. Where it is impracticable that the ship is inclined above 1° because of too large GM or other factors, the precision of measurement is to be enhanced taking account of characteristic and condition of the ship and condition of the test.

(b) Procedures of shifting weights are shown in Table I A1-1.

(c) The transverse shift distance is to be as great as practicable. The inclining weights are to be positioned symmetrically to the center line in order to measure the transverse shift distance easily.

(d) The inclining weight positions are to be marked on the deck to ensure that consistency in placement is achieved.

A1.3.4 Measurement of heel angle

(a) Pendulum, or U-tube reading on the recording batten or scale is to be registered by either of the following ways:
   (i) On the final stable position of the pendulum or liquid column after stopping of ship motions due to shifting of the inclining weight;
   (ii) By marking the center of residual motion about the mean position.

(b) When using other devices, angles of inclination are to be recorded according to instructions supplied for each device.

(c) Whenever the inclining weights are shifted, the plot of heel angle against heeling moment is to be made. If there is a deviation of points from the straight line passing through the initial position, the deflections and moments are to be checked and corrected prior to the next weight movement.

(d) It is to be checked that weights remain on assigned positions and all mooring lines and so on remain slack during measurement.

A1.3.5 Other relevant data

(a) In the case where the inclining test is carried out by means of transfer of water, it has to be possible to evaluate accurately the weight and the center of the shifted liquid in relation to the ship's heel and trim.

(b) The weather conditions, i.e., wind speed and direction relative to the ship, sea state, air and water temperatures, etc., during the test are to be recorded.

A1.4 Postponement of the Test

If during the course of inclining test circumstances arise such that the requirements in this chapter are not complied with, the Surveyor may advise the person in charge to postpone the test.

A1.5 Inclining Test Report

A1.5.1 The Surveyor is to ensure that the data given in the report is consistent with that gathered during the test and to sign the report.

A1.5.2 Test report containing all data gathered during the test, the result calculated from these data and calculating papers is to be made, and to be submitted to the Society.

Table I A1-1
Procedures of Shifting Weights

	Four		Six	
	Port Side	Starboard Side	Port Side	Starboard Side
No.0	2, 4	1, 3	2, 4, 6	1, 3, 5
No.1	4	1, 2, 3	4, 6	1, 2, 3, 5
No.2		1, 2, 3, 4		1, 2, 3, 4, 5, 6
No.3	1	2, 3, 4	6	1, 2, 3, 4, 5
No.4	1, 3	2, 4	2, 4, 6	1, 3, 5
No.5	1, 2, 3	4	1, 2, 3, 4, 6	5
No.6	1, 2, 3, 4		1, 2, 3, 4, 5, 6	
No.7	2, 3, 4	1	1, 2, 4, 6	3, 5
No.8	2, 4	1, 3	2, 4, 6	1, 3, 5

Notes:

(1) The numbers shown in this table show identification number of the weights

(2) The underlined number indicates the last weight or weight group shifted.

Appendix 2

Load Line Markings

A2.1 Load Line Markings

A2.1.1 For ship engaged in international voyages, the load line marking is to be in accordance with Fig. I A2-1.

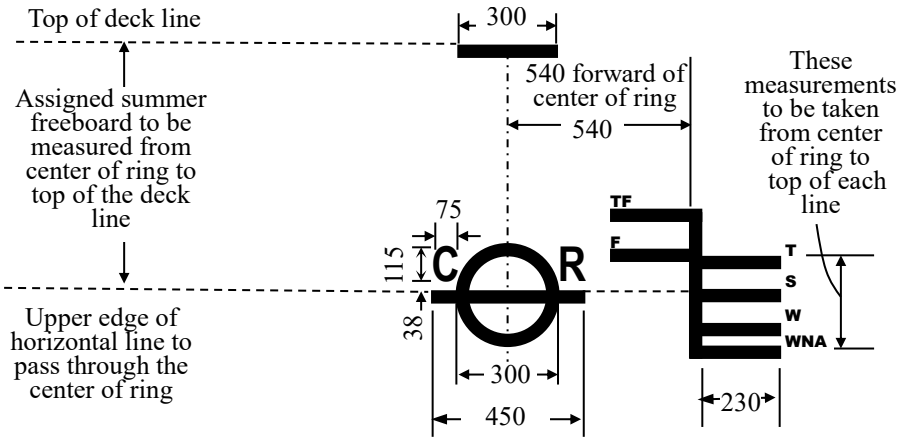

Notes:

(1) The center of the ring is to be placed on each side of the ship at the middle of the length as defined in the Load Line Regulations. The ring and lines are to be permanently marked, as by center punch, chisel cut or bead of weld.

(2) The thickness of all lines are 25 mm.

(3) The size of all letterings are 50 × 32 mm. except W 50 × 45 mm, unless otherwise noted.

Fig. I A2-1
Load Line Markings for Ships Engaged in International Voyages

A2.1.2 For ship not engaged in international voyages, the load line marking is to be assigned in accordance with the requirements of the Administration and may refer to Fig. I A2-2.

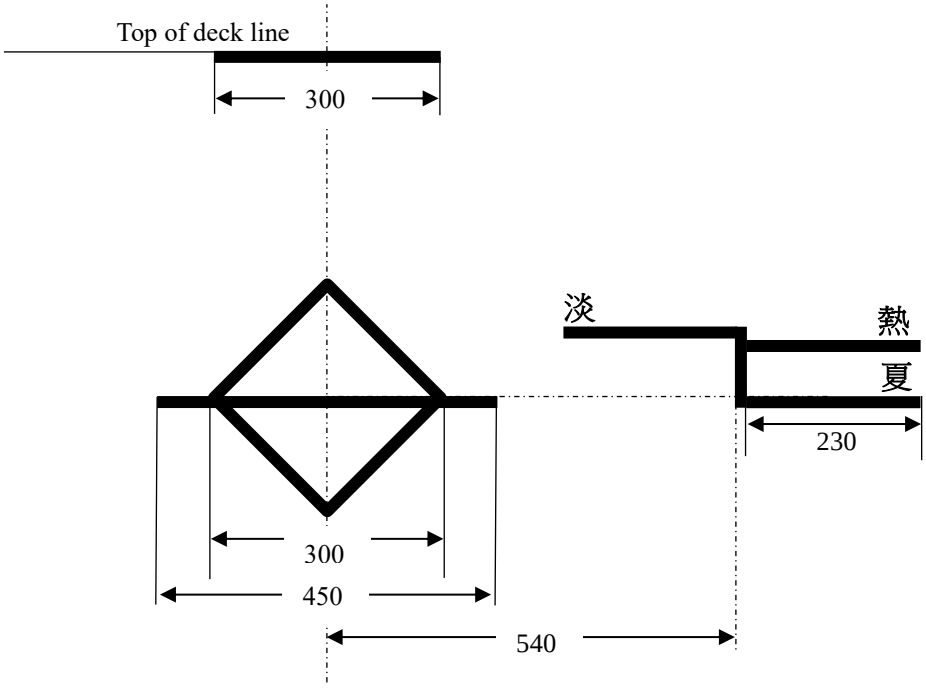

Notes:

(1) The center of the diamond is to be placed on each side of the ship at the middle of the length as defined in the Load Line Regulations. The diamond and lines are to be permanently marked on the ship's outer side.

(2) The thickness of all lines are 25 mm.

(3) The size of the Chinese characters 「淡」,「夏」,「熱」 are 50 × 45 mm.

Fig. I A2-2
Load Line Markings for Ships not Engaged in International Voyages

Tel: *+886 2 25062711*
Fax: *+886 2 25074722*
E-mail: *cr.tp@crclass.org*
Website: *http://www.crclass.org*
© CR – All rights reserved

CR

CR Classification Society

FOUNDED 1951

RULES FOR THE CONSTRUCTION AND CLASSIFICATION OF COAST GUARD SHIPS 2021

PART II — HULL CONSTRUCTION AND EQUIPMENT

August 2020

CR

CR Classification Society

FOUNDED 1951

RULES FOR THE CONSTRUCTION AND CLASSIFICATION OF COAST GUARD SHIPS 2021

PART II － HULL CONSTRUCTION AND EQUIPMENT

August 2020

RULES FOR THE CONSTRUCTION AND CLASSIFICATION OF COAST GUARD SHIPS 2021

PART II
HULL CONSTRUCTION AND EQUIPMENT

CONTENTS

Chapter 1 General 1

1.1 General 1
1.2 Definitions 1
1.3 Submission of Plans 3
1.4 Testing Procedures for Tanks and Boundaries 3
1.5 Materials 8
1.6 Scantlings 11
1.7 Connection of Ends of Stiffeners, Girders and Frames 12
1.8 Brackets 12
1.9 Modification of Span (*l*) for Thicker Brackets 12
1.10 Workmanship 16
1.11 Equipment 16
1.12 Direct Calculations 16
1.13 Structural Details 17

Chapter 2 Stems and Stern Frames 31

2.1 Stems 31
2.2 Stern Frames 31

Chapter 3 Longitudinal Strength 36

3.1 General 36
3.2 Bending Strength 36
3.3 Shearing Strength 39
3.4 Buckling Strength 41
3.5 Loading Manual and Loading Instrument 45

Chapter 4 Single Bottoms 48

4.1 Floors 48
4.2 Center Keelsons 49

4.3 Side Keelsons 50
4.4 Strengthening of Bottom Forward 51
4.5 Pumping and Drainage 51

Chapter 5 Double Bottoms 52

5.1 General 52
5.2 Center Girders 52
5.3 Side Girders and Brackets Inside Tank 54
5.4 Solid Floors 54
5.5 Open Floors 56
5.6 Longitudinal Framing in Double Bottom 58
5.7 Inner Bottoms, Margin and Bottom Plates 59
5.8 Manholes, Lightening Holes, Air and Drainage Holes 61

Chapter 6 Frames 63

6.1 General 63
6.2 Frame Spacing 63
6.3 Transverse Hold Frames 64
6.4 Side Longitudinals and Other Structural Members 69
6.5 Cantilever Beam Systems 72
6.6 Tween Deck Frames 76
6.7 Frames Below Freeboard Deck Forward of Collision Bulkhead 78
6.8 Frames Below Freeboard Deck Abaft of After Peak Bulkhead 78

Chapter 6A Web Frames and Side Stringer 80

6A.1 General 80
6A.2 Web Frames 80
6A.3 Hold Side Stringers 81

Chapter 7 Shell Plating 83

7.1 General 83
7.2 Plate Keels 84
7.3 Shell Plating below the Strength Deck 84
7.4 Special Requirements for Shell Plating 87
7.5 Side Plating in way of Superstructure 89
7.6 Compensation at Ends of Superstructure 89
7.7 Local Compensation of Shell Plating 89

Chapter 8 Strengthening of Bottom Structure Forward 91

8.1 General 91
8.2 Double Bottom Structure 91
8.3 Scantlings of Longitudinal Shell Stiffeners or Bottom Longitudinals 92

Chapter 9 Beams and Deck Longitudinals 94

9.1 General 94
9.2 Beams 94
9.3 Deck Longitudinals 95
9.4 End Attachment of Beams and Deck Longitudinals 96

Chapter 10 Deck Girders and Pillars 98

10.1 General 98
10.2 Deck Girders Clear of Tanks 98
10.3 Deck Transverses 99
10.4 Hatch Side Girders 99
10.5 Hatch End Beams 100
10.6 Pillars 100
10.7 End Attachment of Pillars 101

Chapter 11 Decks 103

11.1 General 103
11.2 Tapering of Deck Sectional Areas and Deck Transitions 103
11.3 Plated Decks 103
11.4 Compensation at Opening 106
11.5 Thickness of Deck Plating Loaded by Wheeled Vehicles 106
11.6 Higher-strength Material 106

Chapter 12 Superstructures and Deckhouses 108

12.1 General 108
12.2 Side Plating and Deck of Superstructures 108
12.3 Superstructure End Bulkheads and Deckhouse Walls 108
12.4 Openings in End Bulkheads of Enclosed Superstructures 110

Chapter 12A Helicopter Decks and Facilities 112

12A.1 General 112
12A.2 Plans 113

12A.3 Structural Strength 113
12A.4 Arrangements 116
12A.5 Additional Requirements for Helideck-II 118
12A.6 Additional Requirements for Helideck-III 118
12A.7 Additional Requirements for Helideck-IV 119

Chapter 13 Bulwarks, Freeing Ports, Side Scuttles, Shell Doors and Gangways 121

13.1 Bulwarks and Guardrails 121
13.2 Freeing Ports 122
13.3 Side Scuttles, Windows and Skylights 125
13.4 Means of Embarkation and Disembarkation 126

Chapter 14 Watertight Bulkheads 128

14.1 General 128
14.2 Construction of Watertight Bulkheads 129
14.3 Watertight Doors 133
14.4 Other Watertight Construction 135

Chapter 15 Non-Watertight Centerline Bulkheads in Hold spaces 138

15.1 Construction 138

Chapter 16 Deep Tanks 139

16.1 General 139
16.2 Deep Tank Bulkheads 140
16.3 Fittings of Deep Tanks 143
16.4 Welding of Corrugated Bulkheads 143

Chapter 17 Hatchways, Machinery Space Openings and Other Deck Openings 146

17.1 General 146
17.2 Hatchways 146
17.3 Machinery Space Openings 167
17.4 Companionways and Other Deck Openings 168

Chapter 18 Machinery Casings 175

18.1 General 175

18.2 Construction of Casings 175
18.3 Skylights and Gratings 175

Chapter 19 Machinery Spaces and Tunnels 176

19.1 General 176
19.2 Engine Seatings 176
19.3 Boiler Bearers 177
19.4 Block and Auxiliary Foundations 177
19.5 Tunnels and Tunnel Recesses 177

Chapter 20 Ceiling 180

20.1 Ceiling 180

Chapter 21 Ventilators, Air and Sounding Pipes 181

21.1 Ventilators 181
21.2 Air and Sounding Pipes 182

Chapter 22 Scuppers and Sanitary Discharges 184

22.1 Scuppers and Sanitary Discharges 184
22.2 Rubbish and Ash Chutes 186
22.3 Materials for Valves and Pipes 186

Chapter 23 Painting 188

23.1 Painting 188
23.2 Cementing 188

Chapter 24 Rudders 189

24.1 General 189
24.2 Rudder Force and Rudder Torque 191
24.3 Rudder Stock 195
24.4 Rudder Plates, Rudder Webs and Rudder Main Pieces 196
24.5 Rudder Stock Couplings 200
24.6 Pintles 205
24.7 Rudder Stock Bearings, Rudder Shaft Bearing and Pintle Bearings 205
24.8 Rudder Carriers 206

24.9 Prevention of Jumping 206
24.10 Rudder Trunk 206
24.11 Guidelines for Calculating of Bending Moment and Shear Force Distribution 208

Chapter 25 Equipment 209

25.1 General 209
25.2 Equipment Number 209
25.3 Anchors 211
25.4 Anchor Cables 212
25.5 Towlines and Mooring Ropes 212
25.6 Arrangements for Working and Stowing of Anchors and Cables 213
25.7 Emergency Towing Procedures 214
25.8 Towing and Mooring Fittings 214
25.9 Towing and Mooring Arrangements Plan 216

Chapter 26 Navigation Bridge Visibility 220

26.1 General 220
26.2 View of the Sea Surface 220
26.3 Blind Sectors 220
26.4 Horizontal Field of Vision 220
26.5 Ship's Side 220
26.6 Bridge Front Windows 220
26.7 Windows 221
26.8 Ships of Unconventional Design 221
26.9 Navigation Bridge Visibility during Ballast Water Exchange 221

Chapter 27 Strength and Securing of Small Hatches, Fore Deck Fittings and Equipment on the Exposed Fore Deck 222

27.1 General 222
27.2 Application 222
27.3 Implementation 222
27.4 Small Hatches 222
27.5 Fore Deck Fittings and Equipment 224

Chapter 28 Means of Access 231

28.1 General Rules 231

Chapter 29 Damage Control for Ships 232

29.1 Application..... 232
29.2 Damage Control..... 232
29.3 Booklet and Plan for Damage Control..... 232

Chapter 30 Intact Stability 234

30.1 Application..... 234
30.2 Stability Information..... 234
30.3 Stability Requirement 234
30.4 Calculation on Stability..... 235
30.5 General Stability Criteria 235
30.6 Stability Criteria in Wind and Waves..... 235

Chapter 30A Subdivision and Damage Stability 239

30A.1 General..... 239

Chapter 31 Ship Recycling..... 240

31.1 General..... 240
31.2 Statement on Inventory of Hazardous Materials (the Statement) 241
31.3 Requirement for New Ships..... 241
31.4 Requirement for Existing Ships 242
31.5 Certification, Maintenance and Survey..... 244

Chapter 32 Pollution Prevention Notations For ShipShips 253

32.1 General..... 253
32.2 PP Notation 253
32.3 BWM Notation 255
32.4 EEDI and SEEMP Notations 255

Chapter 33 Sloshing 256

33.1 General..... 256
33.2 Design Loads for Sloshing..... 256
33.3 Side Structures Subjected to Sloshing..... 261
33.4 Deck Structures Subjected to Sloshing 264
33.5 Bulkhead Structures Subjected to Sloshing 265
33.6 Design Sloshing Load for Ships with Length less than 100 Meters..... 270

Chapter 34 Noise Levels on Board Ships 277

34.1 General 277
34.2 Noise on Board ships 278
34.3 Vibration on Board Ships 279

Chapter 1
General

1.1 General

1.1.1 The Rules are framed for ships not less than 90 m in length intended for ocean service and of normal ratio of breadth to depth. Special consideration is to be given to ships of novel design or for special purpose. For ships less than 90 m in length, are to comply with Part XV of the Rules for Steel Ships.

1.1.2 The design which is not in direct compliance with the requirements of this Part may be accepted by the Society provided that such design is considered satisfactory and equivalent to the Rules.

1.1.3 The Rules are set forth for all welded constructions. Riveted construction, where used, is to comply with the applicable parts dealing with riveting in the 1972 edition of the Rules.

1.1.4 The section modulus of frames, beams, stiffeners, etc. required by the formula in the Rules is based on sections in conjunction with an effective width of plating as specified in 1.6.3.

1.1.5 Where the flanging of the plates may be considered as a substitute for face plates fitted to web plates, the rounding over of the flanges is to be of the smallest practicable radius and normally the width of the flanges excluding 1.5 times the thickness of the plates is to be considered as effective to obtain the effective area of the flanges.

1.1.6 The midship scantlings as specified in the Rules are to apply throughout the midship 0.4L; the end scantlings are not to extend for more than 0.1L from each end of the ship. The tapering from the midship to the end scantlings is to be effected in as a gradual manner as practicable.

1.1.7 Ships are to be built in accordance with controlled and transparent quality production standards with due regard to intellectual property rights. The ship construction quality procedures are to include, but not be limited to, specifications for material, manufacturing, alignment, assembling, joining and welding procedures, surface preparation and coating. All of the industrial standards employed may be recognized, for example, CNS, ISO, JIS, JSQS, DIN, AWS, IACS Rec.47, etc.

1.1.8 Notes for coast guard ships (CGS):

(a) The following terms in the Rules:

(1) “cargo hold” or “cargo space” means hold or space which loaded with heavy stowage such as hanger, stores, spare parts, ammunition, etc.

(2) "ballast condition" means "light load condition". The light load condition consists of all components of the ship (structure, machinery, piping equipment, outfitting, wiring, interiors, paint, etc.) plus 10% of tank and cargo capacity.

1.2 Definitions

1.2.1 Length of ship (L) is the distance, in meters, on the summer load waterline from the fore side of the stem to the after side of the rudder post, or to the center of the rudder stock if there is no rudder post. L is not to be less than 96 %, and need not be greater than 97 %, of the extreme length on the summer load waterline. The summer load waterline is the designed maximum load line corresponding to the full load condition. In ships without rudder post and stock, L is

to be taken equal to 97% of the extreme length on the summer load waterline. In ships with unusual stem or stern arrangements, L is considered on a case by case basis.

1.2.2 Breadth of ship (B) is the horizontal distance, in meters, measured at the broadest part of the hull to the moulded line of the frame in the ship.

1.2.3 Depth of ship (D) is the vertical distance, in meters, at the middle of the length, L, from the top of keel to the top of the uppermost continuous deck beam at side. The depth, D_S, for the determination of the requirements for the shell plating and the strength deck area is measured to the strength deck as defined in 1.2.5 of this Part. When a round gunwale is arranged, the depth, D, is to be measured to the continuation of the molded deck line.

1.2.4 Draught (d) is the vertical distance, in meters, at the middle of the length, L, from the top of keel to the summer load waterline.

1.2.5 Strength deck is the deck that forms the top of the effective hull girder at any part of its length.

1.2.6 Bulkhead deck is the highest deck to which watertight transverse bulkheads except both peak bulkheads extend and are made effective.

1.2.7 Speed of ship (V) is the designed speed, in knots at the maximum continuous rating of the propelling machinery when the ship with clean bottom runs ahead on calm sea at the designed summer load draught.

1.2.8 Block coefficient (C_b) is the coefficient given by dividing the volume of moulded displacement by LBd.

1.2.9 Superstructure is the deck structure on the freeboard deck, extending from side to side of the ship or with the side plating not being inboard of the shell plating more than 4% of the breadth of the ship for freeboard, B_f as specified in 1.2.11 below.

1.2.10 Length of ship for freeboard (L_f) means 96 % of the total length on a waterline at 85 % of the least moulded depth measured from the top of the keel, or the length from the fore-side of the stem to the axis of the rudder stock on that waterline, if that be greater. Where the stem contour is concave above the waterline at 85 % of the least moulded depth, both the forward terminal of the total length and the fore-side of the stem respectively shall be taken at the vertical projection to that waterline of the after most point of the stem contour (above that waterline). In ships designed with a rake of keel the waterline on which this length is measured shall be parallel to the designed waterline.

1.2.11 Breadth of ship for freeboard (B_f) is the maximum horizontal distance in meters, measured at the middle of the length of the ship for freeboard, L_f, to the moulded line of the frame in the ship.

1.2.12 Freeboard deck

(a) Freeboard deck is normally the uppermost continuous deck exposed to weather and sea, which has permanent means of closing all openings in the weather part thereof, and below which all openings in the sides of the ship are fitted with permanent means of watertight closing.

(b) In a ship having a discontinuous freeboard deck, the lowest line of the exposed deck and the continuation of that line parallel to the upper part of the deck is taken as the freeboard deck.

(c) Where the designed load draught is less than derived from the provision of the International Convention on Load Lines, 1966 assuming the existing deck below the freeboard deck as the freeboard deck, the existing lower deck may be designated as the freeboard deck in the application of the Rules, provided it is to be continuous in a fore and aft direction at least between the machinery space and peak bulkheads and continuous athwartships. Where this lower deck is stepped, the lowest line of the deck and the continuation of that line parallel to the upper part of the deck is taken as the freeboard deck.

1.2.13 The midship part of ship is the part 0.4L amidships unless otherwise specified.

1.2.14 The end parts of ship are the parts 0.1L from each end of the ship.

1.2.15 Keel line is a line parallel to the slope of the keel passing amidships through the top of the keel at the centerline or at the line of intersection of the inside of a shell plating with the keel if a bar keel extends below that line, on a ship with a metal shell.

1.2.16 Refer to IACS Rec. 82: Surveyor's Glossary – Hull terms & hull survey terms.

1.3 Submission of Plans

1.3.1 Plans should generally be submitted electronically to the Society via CR Plan Approval System (CRPA). However, hard copies in triplicate will also be accepted. In general, plans covering the following items are to be submitted and approved before the work of construction commences:

(a) Construction plans, as detailed in the respective Chapters of the Rules, such as Midship Section, Longitudinal Section, Decks, Shell Plating, Bottom Construction, Framing, Inner Bottom Plating, Watertight Bulkheads, Structural Non-tight Bulkheads, Deep Tanks, Pillars and Girders, Shaft Tunnels, Bow Construction, Stern Construction, Machinery Casing, Main Engine, Boiler and Main Auxiliary Foundations, Stem, Sternframe, Rudder, Shaft Struts, Spectacle Frames and Bossing, Superstructures and Deck Houses, etc. The proposed scantlings with the necessary particulars for determining the scantlings according to the Rules, the grade of steel to be used, and the arrangement of all parts relevant to the Rules are to be shown on the Plans.

(b) Longitudinal strength calculations including Still Water Bending Moment and Shear Force Calculations and Section Modulus Calculations as required by 3.2 of this Part.

(c) Equipment Calculations as required by 25.2 of this Part.

(d) Plans and Particulars relevant to the Freeboard Assignment, such as Freeboard Calculations, Safety Against Flooding, if any; Doors, Position of Hatchways, Doorways and Ventilators, Cargo and Other Hatchways, Miscellaneous Openings in Freeboard and Superstructure Decks, Ventilators, Air Pipes, Hold Ports and other Similar Openings, Scuppers, Inlets and Discharges, Side Scuttles, Freeing Ports, Protection of the Crew, Gangway and Access etc.

1.3.2 Any alterations made to the approved plans are subject to approval by the Society before the work with respect to such alterations commences.

1.4 Testing Procedures for Tanks and Boundaries

1.4.1 Reference is made to IACS UR S14 (Rev. 6) for definition of applicable ships. The requirements of testing procedures are divided into two parts, PART A and PART B as follows:

(a) PART A - SOLAS ships (including CSR BC & OT)

(b) PART B - Non-SOLAS ships and SOLAS Exempt/Equivalent ships

1.4.2 Testing procedures of watertight compartments for SOLAS ships (including CSR BC & OT) are to be carried out in accordance with PART A, unless:

(a) the shipyard provides documentary evidence of the shipowner's agreement to a request to the Flag Administration for an exemption from the application of SOLAS Ch. II-1, Reg. 11, or for an equivalency agreeing that the content of PART B is equivalent to SOLAS Ch. II-1, Reg. 11; and

(b) the above-mentioned exemption or equivalency has been granted by the responsible Flag Administration.

1.4.3 Testing procedures of watertight compartments are to be carried out in accordance with PART B for non-SOLAS ships and those SOLAS Exempt/Equivalent ships for which:

(a) the shipyard provides documentary evidence of the shipowner's agreement to a request to the Flag Administration for an exemption from the application of SOLAS Ch. II-1, Reg. 11, or for an equivalency agreeing that the content of PART B is equivalent to SOLAS Ch. II-1, Reg. 11; and

(b) the above-mentioned exemption or equivalency has been granted by the responsible Flag Administration.

1.4.4 Part A – SOLAS ships

(a) General
   (i) These test procedures are to confirm the watertightness of tanks and watertight boundaries, and the structural adequacy of tanks which consist of the watertight subdivisions of ships. These procedures may also be applied to verify the weathertightness of structures and shipboard outfitting. The tightness of all tanks and water tight boundaries of ships during new construction and those relevant to major conversions or major repairs is to be confirmed by these test procedures prior to the delivery of the ship.
   (ii) Watertight subdivision means the main transverse and longitudinal subdivisions of the ship required to satisfy the subdivision requirements of SOLAS Chapter II-1.
   (iii) Major repair means a repair affecting structural integrity.
   (iv) Gravity tank means a tank that is subject to vapor pressure not greater than 70 kPa.

(b) Application
   (i) All gravity tanks and other boundaries required to be watertight or weathertight are to be tested in accordance with 1.4.4 and proven tight and structurally adequate as follows:
      (1) Gravity Tanks for their tightness and structural adequacy,
      (2) Watertight Boundaries other than Tank Boundaries for their watertightness, and
      (3) Weathertight Boundaries for their weathertightness.
   (ii) The testing of structures not listed in Table II 1-1 of this Chapter, is to be specially considered.

(c) Test Types Definitions
   (i) The following two types of test are specified in this requirement:
      (1) Structural Test
      A test to verify the structural adequacy of tank construction. This may be a hydrostatic test or, where the situation warrants, a hydropneumatic test.

(2) Leak Test
A test to verify the tightness of a boundary. Unless a specific test is indicated, this may be a hydrostatic / hydropneumatic test or an air test. A hose test may be considered an acceptable form of leak for certain boundaries, as indicated by Note (3) of Table II 1-1 of this Chapter.

(ii) The definition of each test type is as follows:

(1) Hydrostatic Test (Leak and Structural)
A test wherein a space is filled with a liquid to a specified head.

(2) Hydropneumatic Test (Leak and Structural)
A test combining a hydrostatic test and an air test. wherein a space is partially filled with a liquid and pressurized with air.

(3) Hose Test (Leak)
A test to verify the tightness of a joint by a jet of water with the joint visible from the opposite side.

(4) Air Test (Leak)
A test to verify tightness by means of air pressure differential and leak indicating solution. It includes tank air tests and joint air tests, such as compressed air fillet weld tests and vacuum box tests.

(5) Compressed Air Fillet Weld Test (Leak)
An air test of fillet welded tee joint wherein leak indicating solution is applied on fillet welds.

(6) Vacuum Box Test (Leak)
A box over a joint with leak indicating solution applied on the welds. A vacuum is created inside the box to detect any leaks.

(7) Ultrasonic Test (Leak)
A test to verify the tightness of the sealing of closing devices such as hatch covers by means of ultrasonic detection techniques.

(8) Penetration Test (Leak)
A test to verify that no visual dye penetrant indications of potential continuous leakages exist in the boundaries of a compartment by means of low surface tension liquids (i.e. dye penetrant test).

(9) Other test
Other methods of testing may be considered by the Society upon submission of full particulars prior to the commencement of testing.

(d) Test Procedures

(i) General

Tests are to be carried out in the presence of the Surveyor at a stage sufficiently close to the completion of the work with all hatches, doors, windows, etc., installed and all penetrations including pipe connections fitted, and before any ceiling and cement work is applied over the joints. Specific test requirements are given in 1.4.4(d)(iv) and Table II 1-1 of this Chapter. For the timing of the application of coating and the provision of safe access to joints, see 1.4.4(d)(v), 1.4.4(d)(vi) and Table II 1-2 of this Chapter.

(ii) Structural test procedures

(1) Type and time of test
Where a structural test is specified in Table II 1-1 of this Chapter, a hydrostatic test in accordance with 1.4.4(d)(iv)(1) of this Chpater will be acceptable. Where practical limitations (strength of building berth, density of liquid, etc.) prevent the performance of a hydrostatic test, a hydropneumatic test in accordance with 1.4.4(d)(iv)(2) of this Chapter may be accepted instead. A hydrostatic test or hydropneumatic test for the confirmation of structural adequacy may be carried out while the ship is afloat, provided the results of a leak test are confirmed to be satisfactory before the ship is afloat.

(2) Testing Schedule for New Construction or Major Structural Conversion

a) Tanks which are intended to hold liquids, and which form part of the watertight subdivision of the ship* , shall be tested for tightness and structural strength as indicated in Table II 1-1 of this Chapter.

* Watertight subdivision means the main transverse and longitudinal subdivisions of the ship required to satisfy the subdivision requirements of SOLAS Ch. II-1.

b) The tank boundaries are to be tested from at least one side. The tanks for structural test are to be selected so that all representative structural members are tested for the expected tension and compression.

c) The watertight boundaries of spaces other than tanks for structural testing may be exempted, provided that the water-tightness of boundaries of exempted spaces is verified by leak tests and inspections. Structural testing may not be exempted and the requirements for structural testing of tanks in 1.4.4(d)(ii)(2)a) to 1.4.4(d)(ii)(2)b) of this Chapter shall apply, for ballast holds, chain lockers and a representative cargo hold if intended for in-port ballasting.

d) Tanks which do not form part of the watertight subdivision of the ship, may be exempted from structural testing provided that the water-tightness of boundaries of exempted spaces is verified by leak tests and inspections.

(iii) Leak test procedures

(1) For the leak test specified in Table II 1-1, tank air tests, compressed air fillet weld tests, vacuum box tests in accordance with 1.4.4(d)(iv)(4) through 1.4.4(d)(iv)(6) of this Chapter, or their combination, will be acceptable. Hydrostatic or hydropneumatic test may also be accepted as leak tests provided that 1.4.4(d)(v), 1.4.4(d)(vi) and 1.4.4(d)(vii) of this Chapter are complied with. Hose tests will also be acceptable for such locations as specified in Note (3) of Table II 1-1 of this Chapter, in accordance with 1.4.4(d)(iv)(3) of this Chapter.

(2) The application of the leak test for each type of welded joint is specified in Table II 1-2.

(3) Air tests of joints may be carried out in the block stage provided that all work on the block that may affect the tightness of a joint is completed before the test. See also 1.4.4(d)(v)(1) of this Chapter for the application of final coatings and 1.4.4(d)(vi) of this Chapter for the safe access to joints and the summary in Table II 1-2 of this Chapter.

(iv) Test Methods

(1) Hydrostatic Test

Unless other liquid is approved, the hydrostatic tests are to consist of filling the space by fresh water or sea water, whichever is appropriate for testing, to the level specified in Table II 1-1 of this Chapter.

In case a tank is designed for cargo densities greater than sea water and testing is with fresh water or sea water, the testing pressure height is to simulate the actual loading for those greater cargo densities as far as practicable.

All external surfaces of the tested space are to be examined for structural distortion, bulging and buckling, other related damage and leaks.

(2) Hydropneumatic test

Hydropneumatic tests where approved, are to be such that the test condition in conjunction with the approved liquid level and supplemental air pressure will simulate the actual loading as far as practicable. The requirements and recommendations for tank air tests in 1.4.4(d)(iv)(4) of this Chapter will also apply to the hydropneumatic test. See also 1.4.4(d)(vii) of this Chapter.

All external surfaces of the tested space are to be examined for structural distortion, bulging and buckling, other related damage and leaks.

(3) Hose test

Hose tests are to be carried out with the pressure in the hose nozzle maintained at least at 2×10^5 Pa during the test. The nozzle is to have a minimum inside diameter of 12 mm and be at a perpendicular distance from the joint not exceeding 1.5 m. The water jet is to impinge directly upon the weld.

Where a hose test is not practical because of possible damage to machinery, electrical equipment insulation or outfitting items, it may be replaced by a careful visual examination of welded connections, supported where necessary by means such as a dye penetrant test or ultrasonic leak test or the equivalent.

(4) Tank air test

All boundary welds, erection joints and penetrations, including pipe connections are to be examined in accordance with approved procedure and under a stabilized pressure differential

above atmospheric pressure not less than 0.15×10^5 Pa, with a leak indicating solution such as soapy water/detergent or a proprietary brand applied.
A U-tube with a height sufficient to hold a head of water corresponding to the required test pressure is to be arranged. The cross sectional area of the U-tube is not to be less than that of the pipe supplying air to the tank. Arrangements involving the use of two calibrated pressure gauges to verify the required test pressure may be accepted taking into account the provisions in F5.1 and F7.4 of IACS Rec. 140, "Recommendation for Safe Precautions during Survey and Testing of Pressurized Systems".
A double inspection is to be made of tested welds. The first is to be immediately upon applying the leak indication solution; the second is to be after approximately four or five minutes in order to detect those smaller leaks which may take time to appear.

(5) Compressed air fillet weld test
In this air test, compressed air is injected from one end of a fillet welded joint and the pressure verified at the other end of the joint by a pressure gauge on the opposite side. Pressure gauges are to be arranged so that an air pressure of at least 0.15×10^5 Pa can be verified at each end of all passages within the portion being tested.
Note: Where a leak test is required for fabrication involving partial penetration welds, a compressed air test is also to be applied in the same manner as to fillet weld where the root face is large, i.e., 6-8 mm.

(6) Vacuum box test
A box (vacuum testing box) with air connections, gauges and an inspection window is placed over the joint with leak indicating solution applied to the weld cap vicinity. The air within the box is removed by an ejector to create a vacuum of 0.20×10^5 – 0.26×10^5 Pa inside the box.

(7) Ultrasonic test
An ultrasonic echo transmitter is to be arranged inside of a compartment and a receiver is to be arranged on the outside. The watertight/weathertight boundaries of the compartment are scanned with the receiver in order to detect an ultrasonic leak indication. A location where the sound is detectable by the receiver indicates a leakage in the sealing of the compartment.

(8) Penetration test
A test of butt welds or other weld joints uses the application of a low surface tension liquid at one side of a compartment boundary or structural arrangement. If no liquid is detected on the opposite side of the boundaries after the expiration of a defined period of time, this indicates tightness of the boundaries. In certain cases, a developer solution may be painted or sprayed on the other side of the weld to aid leak detection.

(9) Other test
Other methods of testing may be considered by the Society upon submission of full particulars prior to commencement of the testing.

(v) Application of coating

(1) Final coating
For butt joints welded by an automatic process, the final coating may be applied any time before the completion of a leak test of spaces bounded by the joints, provided that the welds have been carefully inspected visually to the satisfaction of the Surveyor. The Surveyor reserves the right to require a leak test prior to the application of the final coating over automatic erection butt welds.
For all other joints, the final coating is to be applied after the completion of the leak test of the joint. See also Table II 1-2 of this Chapter.

(2) Temporary coating
Any temporary coating which may conceal defects or leaks is to be applied at the time as specified for the final coating. This requirement does not apply to shop primer.

(vi) Safe access to joints

For leak tests, a safe access to all joints under examination is to be provided. See also Table II 1-2 of this Chapter.

(vii) Hydrostatic or hydropneumatic tightness test

In cases where the hydrostatic or hydropneumatic tests are applied instead of a specific leak test, examined boundaries must be dew-free, otherwise small leaks are not visible.

1.4.5 PART B – Non-SOLAS Ships and SOLAS Exemption/Equivalent Ships

(a) General

These test procedures are to confirm the watertightness of tanks and watertight boundaries, and the structural adequacy of tanks which consist of the watertight subdivisions of ships. These procedures may also be applied to verify the weathertightness of structures and shipboard outfitting. The tightness of all tanks and water tight boundaries of ships during new construction and those relevant to major conversions or major repairs is to be confirmed by these test procedures prior to the delivery of the ship.

(b) Application

(i) Testing procedures are to be carried out in accordance with the requirements of 1.4.4(d)(ii) to 1.4.4(d)(vii) of this Chapter in association with the following alternative procedures for 1.4.4(d)(ii)(2) "Testing Schedule for New Construction or Major Structural Conversion" and alternative test requirements for Table II 1-1 of this Chapter.

(ii) The tank boundaries are to be tested from at least one side. The tanks for structural test are to be selected so that all representative structural members are tested for the expected tension and compression.

(iii) Structural tests are to be carried out for at least one tank of a group of tanks having structural similarity (i.e. same design conditions, alike structural configurations with only minor localised differences determined to be acceptable by the attending Surveyor) on each ship provided all other tanks are tested for leaks by an air test.

(iv) Additional tanks may require structural testing if found necessary after the structural testing of the first tank.

(v) Where the structural adequacy of the tanks of a ship were verified by the structural testing required in Table II 1-1 of this Chapter, subsequent ships in the series (i.e. sister ships built from the same plans at the same shipyard) may be exempted from structural testing of tanks, provided that:

(1) Water-tightness of boundaries of all tanks is verified by leak tests and thorough inspections are carried out.

(2) Structural testing is carried out for at least one tank of each type among all tanks of each sister ship.

(3) Additional tanks may require structural testing if found necessary after the structural testing of the first tank or if deemed necessary by the attending Surveyor.

(vi) Sister ships built (i.e. keel laid) two years or more after the delivery of the last ship of the series, may be tested in accordance with 1.4.5(b)(v) of this Chapter at the discretion of the Society, provided that:

(1) general workmanship has been maintained (i.e. there has been no discontinuity of shipbuilding or significant changes in the construction methodology or technology at the yard, shipyard personnel are appropriately qualified and demonstrate an adequate level of workmanship as determined by the Society); and

(2) an NDT plan is implemented and evaluated by the Society for the tanks not subject to structural tests. Shipbuilding quality standards for the hull structure during new construction are to be reviewed and agreed during the kick-off meeting. Structural fabrication is to be carried out in accordance with IACS Rec. 47, "Shipbuilding and Repair Quality Standard", or a recognised fabrication standard which has been accepted by the Society prior to the commencement of fabrication/construction. The work is to be carried out in accordance with the Rules and under survey of the Society.

1.4.6 General requirements for testing are given in Table II 1-1 of this Chapter.

1.5 Materials

1.5.1 The requirements for hull scantling given in this Part are based on the use of mild steel as specified in Part XI.

1.5.2 High strength steel

(a) The material factor K for section modulus for 0.4 L amidship of hull and for other strength calculation is to be as follows:

K = Material factor.
= 1.00 for mild steel.
= 0.78 for HT32.
= 0.72 for HT36.
= 0.68 for HT40.
0.66 for HT40 provided that a fatigue assessment of the structure is performed to verify compliance with the requirements of the Society.
= 0.62 for HT47.

Material factor for extra high strength steels are to be specially considered.

(b) For longitudinal strength applicable of higher strength material are to be continuous over the length of the ship to locations where the stresses levels will be suitable for the adjacent mild steel structure. Higher strength steel is to be extended to suitable locations below the strength deck and above the bottom, so that the stress levels will be satisfactory for the remaining mild steel structure. Longitudinal framing members are to be continuous throughout the required extent of higher strength steel.

(c) For rudder stocks, pintles, flanges, coupling bolts, keys and cast parts of rudders, required scantlings may be reduced with consideration of the following material factor when higher strength steels are used:

$$K = \left(\frac{235}{\sigma_y}\right)^e$$

where:
K = Material factor.
e = 0.75 for $\sigma_y > 235$ N/mm^2.
= 1.00 for $\sigma_y \leq 235$ N/mm^2.
σ_y = Yield stress of material used, in N/mm^{2}and is to be taken
$\leq$ $0.7\sigma_t$ or 450 N/mm^2, whichever is smaller.
σ_t = Tensile strength of material, in N/mm^2.

(d) The scantling of local structure such as section modulus, moment of inertia, thickness, sectional area, etc. are to be specially considered by the Society.

1.5.3 Where materials other than those specified in 1.5.1 and 1.5.2 above are used, the use of such materials and the corresponding scantlings are to be specially approved by the Society.

1.5.4 Use of steel grades for ships

(a) Materials in the various strength members are not to be of lower grade than those corresponding to the material classes and grades specified in Table II 1-3 to Table II 1-6. General requirements are given in Table II 1-3, while additional minimum requirements for ships with length exceeding 150 m and 250 m are given in Table II 1-4 and Table II 1-5,. The material grade requirements for hull members of each class depending on the thickness are defined in Table II 1-6.

(b) For strength members not mentioned in Table II 1-3 to Table II 1-5, Grade A/AH may generally be used. The steel grade is to correspond to the as-built plate thickness when this is greater than the rule requirement.

(c) Plating materials for stern frames, rudders, rudder horns and shaft brackets are in general not to be of lower grades than corresponding to Class II. For rudder and rudder body plates subjected to stress concentrations (e.g. in way of lower support of semi-spade rudders or at upper part of spade rudders) Class III is to be applied.

1.5.5 Structures exposed to low air temperatures

(a) For ships intended to operate in areas with low air temperatures (below and including -20ºC), e.g. regular service during winter seasons to Arctic or Antarctic waters, the materials in exposed structures are to be selected based on the design temperature t_D, to be taken as defined in 1.5.6.

(b) Materials in the various strength members above the lowest ballast water line (BWL) exposed to air are not to be of lower grades than those corresponding to Classes I, II and III, as given in Table II 1-7 of this Chapter, depending on the categories of structural members (SECONDARY, PRIMARY and SPECIAL). For non-exposed structures (except as indicated in Note (5) of Table II 1-7 of this Chapter) and structures below the lowest ballast water line, see 1.5.4 of this Chapter.

(c) The material grade requirements for hull members of each class depending on thickness and design temperature are defined in Table II 1-8 to Table II 1-10. For design temperatures t_D < -55ºC, materials are to be specially considered by the Society.

(d) Single strakes required to be of Class III or of Grade E/EH or FH are to have breadths not less than 800+ 5L mm, maximum 1800 mm.

(e) Plating materials for stern frames, rudder horns, rudders and shaft brackets are not to be of lower grades than those corresponding to the material classes given in 1.5.4.

1.5.6 The design temperature t_D is to be taken as the lowest mean daily average air temperature in the area of operation. For seasonally restricted service, the lowest value within the period of operation applies. Fig. II 1-1 illustrates the temperature definition.

1.5.7 For the purpose of issuing a Polar Ship Certificate in accordance with the Polar Code, the design temperature t_D shall be no more than 13ºC higher than the Polar Service Temperature (PST) of the ship. In the Polar Regions, the statistical mean over observation period is to be determined for a period of at least 10 years.

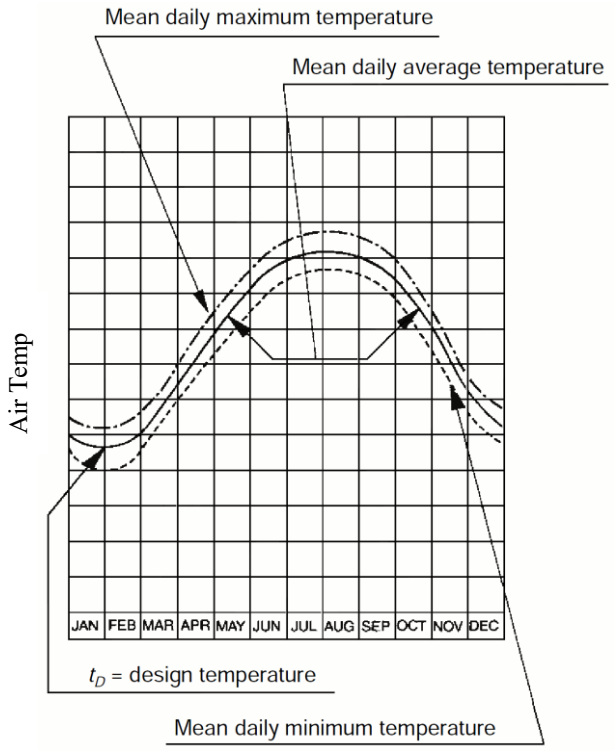

Fig. II 1-1
Commonly Used Definitions of Temperatures

1.6 Scantlings

1.6.1 The midship part and end parts of the ship used when describing the location of structural members and their scantlings are defined in 1.2.13 and 1.2.14 respectively.

1.6.2 Unless specified otherwise, scantlings of structural members of the midship part can be reduced gradually over the length of 0.1L afore and abaft.

1.6.3 Section moduli specified by the Rules include the steel plates with an effective breadth of 0.1*l* on either side of the members, unless specified otherwise. However, the 0.1*l* steel plates are not to exceed one-half of the distance to the next member. *l* is the length of the member specified in the relevant Chapters.

1.6.4 When calculating the section module of longitudinals or longitudinal stiffeners, these values may be properly reduced where these members are effectively supported inside the span defined in the formula.

1.6.5 Where flat bars, angles or flanged plates are welded to form beams, frames or stiffeners for which section moduli are specified, they are to be of suitable depth and thickness in proportion to the section modulus specified in the Rules.

1.6.6 For members such as girders and floors, to which sectional area of face plate is specified, the breadth of the flange is not to be less than that obtained from the following formula, where the inner edge of the web plate is flanged in lieu of a face plate.

$$\frac{100A}{t} + 1.5t \qquad \text{mm}$$

where:

A = Required sectional area, in cm^2, of face plate.
t = Thickness, in mm, of web plate.

1.6.7 Group of stiffeners

Scantlings of stiffeners based on requirements in this Part may be decided based on the concept of grouping designated sequentially placed stiffeners of equal scantlings on a single stiffened panel. The scantling of the group is to be taken as the greater of the following:

- The average of the required scantling of all stiffeners within a group.
- 90% of the maximum scantling required for any one stiffener within the group.

1.7 Connection of Ends of Stiffeners, Girders and Frames

1.7.1 Where the ends of girders are connected to locations such as bulkheads and tank tops, the end connections of all girders are to be balanced by effective supporting members on the opposite side of these locations.

1.7.2 The length of the frame-side arm of brackets connected to the frames or stiffeners of locations such as bulkheads or deep tanks is not to be less than one-eighth of *l* specified in the relevant Chapter, unless otherwise specified.

1.7.3 Where stiffeners support the longitudinals penetrating floors or transverse girders in tanks, the connection of the stiffeners to the longitudinals is to have enough fatigue strength for the dynamic pressure that occurs in such tanks. These stiffeners are to be of a thickness not less than the minimum thickness required for floors or transverse girders and the depth of which is not to be less than 0.08 times the depth of girders or transverse floors, d_0 (in mm), minus the height of the longitudinals. However, stiffeners of an equivalent or greater strength are deemed acceptable.

1.8 Brackets

1.8.1 The size of brackets is to be determined by Table II 1-11 of this Chapter according to the length of the longer arm.

1.8.2 The thickness of brackets is to be suitably increased where the depth of the brackets at the throat is less than two-thirds of the longer arm of the bracket.

1.8.3 Where lightening holes are cut into the brackets, the distance from the circumference of the hole to the free flange of the bracket is not to be less than the diameter of the lightening hole.

1.8.4 Where the length of the longer arm exceeds 800 mm, the free edges of the brackets are to be stiffened by flanging or by other means, except where tripping brackets or the like are provided.

1.9 Modification of Span (*l*) for Thicker Brackets

1.9.1 Span (*l*) for thicker brackets

Where brackets are not thinner than the girder plates, the value of *l* specified in this Part may be modified in accordance with the following:

(a) Where the sectional area of the face plate of the bracket is not less than one-half that of the girder and the face plate of the girder which is carried on to the bulkhead, deck, tank top, etc., *l* may be measured to a point 0.15m inside the toe of the bracket.

(b) Where the sectional area of the face plate of the bracket is less than one-half that of the girder and the face plate of the girder which is carried on to the bulkhead, deck, tank top, etc., *l* may be measured to a point where the sum of sectional areas of the bracket and its face plate outside the line of the girder is equal to the sectional area of the face plate of girder, or to a point 0.15m inside the toe of the bracket, whichever is greater.

(c) Where brackets are provided and the face plates of girders extend along the free edge of brackets to the bulkhead, deck, tank top, etc., even if the free edge of brackets is curved, *l* is to be measured to the toe of the bracket.

(d) Brackets are not to be considered effective beyond the point where the arm along the girder is 1.5 times the length of the arm on the bulkhead, deck, tank top, etc.

(e) In no case is the allowance in *l* at either end to exceed one-quarter of the overall length of the girder including the part of end connection.

1.9.2 Effective bending span (l_e) of stiffeners

The effective bending span (l_e) of stiffeners is to be measured as shown in Fig. II 1-2 for single skin structures and Fig. II 1-3 for double skin structures.

If the web stiffener is sniped at the end or not attached to the stiffener under consideration, the effective bending span is to be taken as the full length between primary supporting members unless a backing bracket is fitted, see Fig. II 1-2.

The effective bending span may be reduced where brackets are fitted to the flange or free edge of the stiffener. Brackets fitted on the side opposite to that of the stiffener with respect to attached plating are not to be considered as effective in reducing the effective bending span.

In single skin structures, the effective bending span of a stiffener supported by a bracket or by a web stiffener on one side only of the primary supporting member web, is to be taken as the total span between primary supporting members as shown in item (a) of Fig. II 1-2. If brackets are fitted on both sides of the primary supporting member, the effective bending span is to be taken as in items (b), (c) and (d) of Fig. II 1-2.

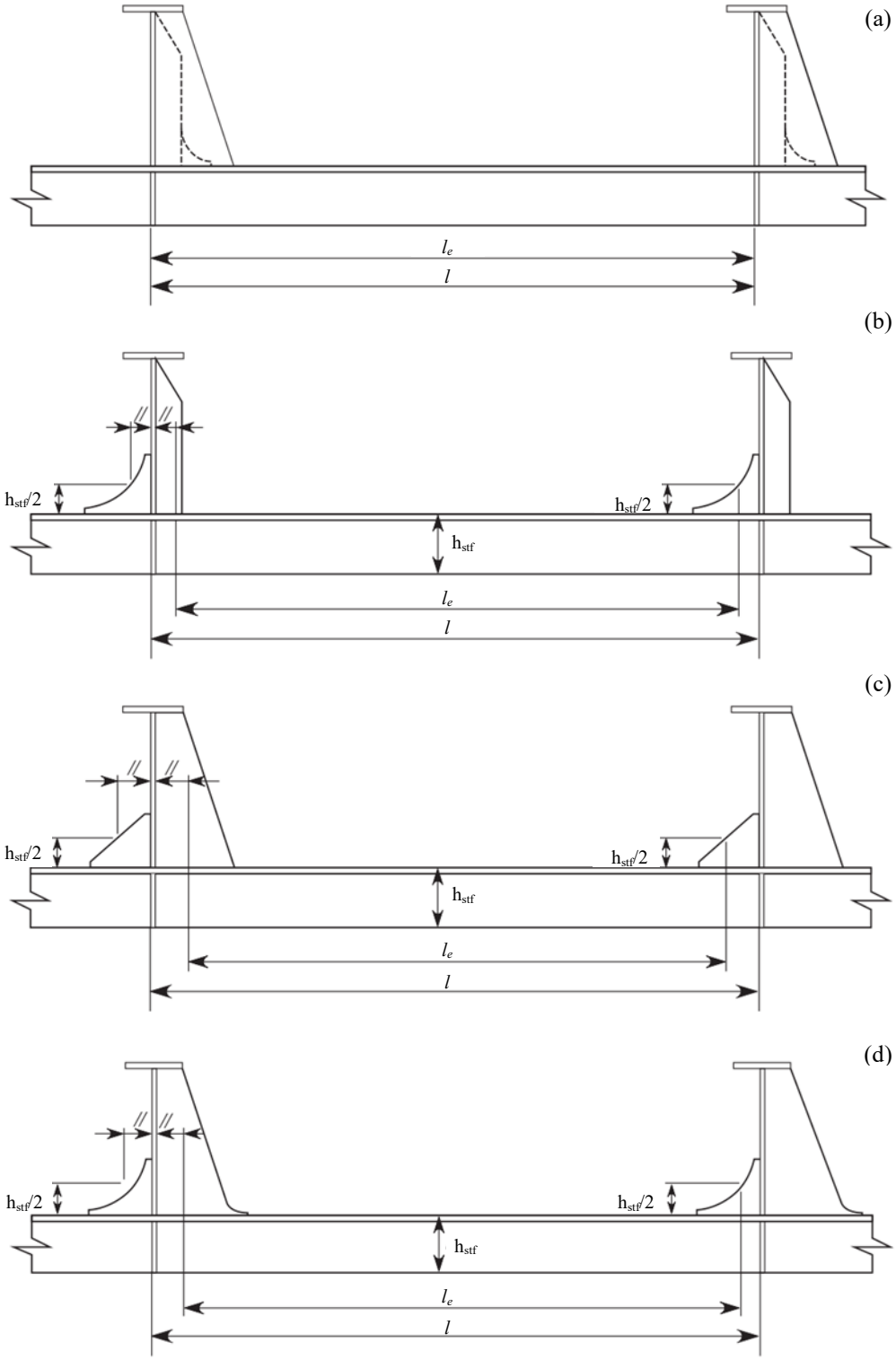

Fig. II 1-2
Effective Bending Span of Stiffeners Supported by Web Stiffeners (Single Skin Construction)

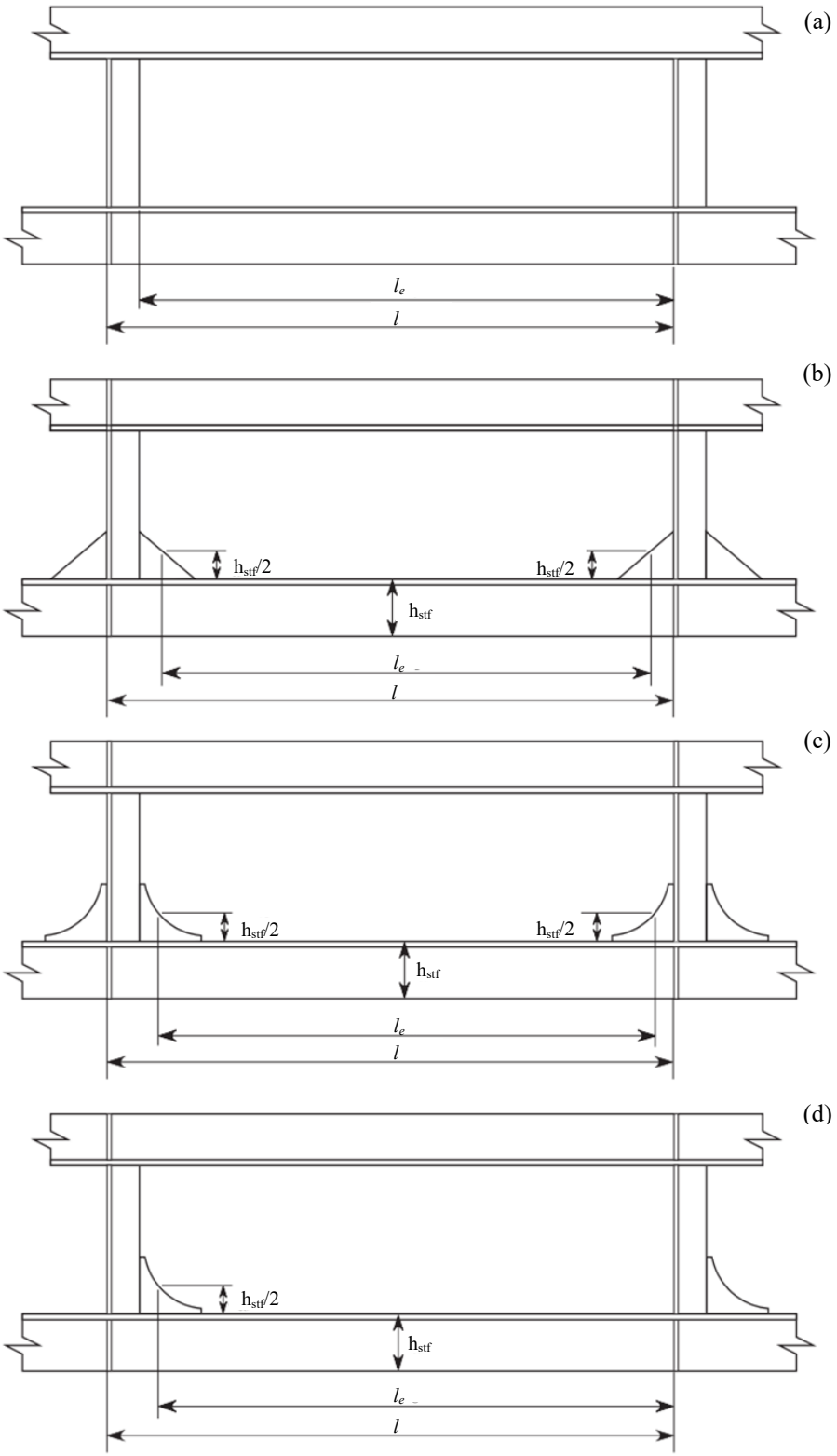

Note: Where the face plate of the stiffener is continuous along the edge of the bracket, the effective bending span is to be taken to the position where the depth of the bracket is equal to one quarter of the depth of the stiffener, see Fig. II 1-4.

Fig. II 1-3
Effective Bending Span of Stiffeners Supported by Web Stiffeners (Double Skin Construction)

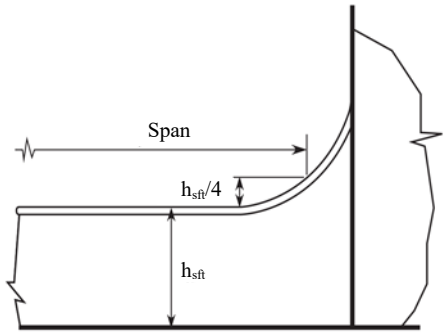

Fig. II 1-4
Effective Bending Span for Local Support Members with Continuous Face Plate along Bracket Edge

1.10 Workmanship

1.10.1 The workmanship is to be of the best quality. During construction, the builder is to supervise and inspect every job in detail performed in the shed and yard.

1.10.2 The connection of structural parts of the hull is to be fair and sound.

1.10.3 The edges of steel plates are to be accurate and fair.

1.10.4 The flanging inner radius is not to be less than two times but not greater than 3 times the thickness of plate.

1.10.5 Where frames or beams pass through watertight decks or bulkheads, the deck or bulkhead is to be constructed watertight without using wooden materials or cement.

1.10.6 The details of welded joints and their workmanship are to be as specified in Part XII.

1.11 Equipment

1.11.1 Masts and riggings, cargo handling, mooring and anchoring arrangements and other fittings for which there are no particular requirements in this Part are to be of appropriate construction and arrangement suitable for their respective purposes. Where deemed necessary, tests are to be carried out to the satisfaction of the Surveyor.

1.12 Direct Calculations

1.12.1 Where approved by the Society, direct calculations may be used to determine the scantlings of primary members. Where direct calculations are used, the data necessary for the calculations are to be submitted to the Society including but not limited to as follows:

(a) The direct calculation procedures are to be agreed by the Society.

(b) The technical program(s) used.

(c) A description of the structural modelling.

(d) A summary of analysis parameters including properties and boundary conditions.

(e) Details of the loading conditions and the means of applying loads.

(f) A comprehensive summary of calculation results. Sample calculations should be submitted where appropriate.

In general, submission of large volumes of input and output data associated with such programs as finite element analysis will not be necessary.

1.12.2 Where deemed necessary by the Society based on factors such as the type and size of the ship, the scantlings of primary members are to be determined by the direct strength analysis.

1.13 Structural Details

1.13.1 Continuity and alignment

(a) The arrangement of material is to be such as will ensure structural continuity. Abrupt changes of shape or section, sharp corners and points of stress concentration are to be avoided.

(b) Where members abut on both sides of a bulkhead or similar structure, care is to be taken to ensure good alignment.

(c) Pillars and pillar bulkheads are to be fitted in the same vertical line wherever possible, and elsewhere arrangements are to be made to transmit the out of line forces satisfactorily. The load at head and heel of pillars is to be effectively distributed and arrangements are to be made to ensure the adequacy and lateral stability of the supporting members.

(d) Continuity is to be maintained where primary members intersect and where the members are of the same depth, a suitable gusset plate is to be fitted.

(e) End connections of structural members are to provide adequate end fixity and effective distribution of the load into the supporting structure.

(f) The toes of brackets, etc. should not land on unstiffened panels of plating. Special care should be taken to avoid notch effects at the toes of brackets, by making the toe concave or otherwise tapering it off.

(g) Where primary and/or secondary members are constructed of higher tensile steel, particular attention is to be paid to the design of the end bracket toes in order to minimise stress concentrations. Sniped face plates which are welded onto the edge of primary member brackets are to be carried well around the radiused bracket toe and are to incorporate a taper not greater than 30º. Where sniped face plates are welded adjacent to the edge of primary member brackets, adequate cross sectional area is to be provided through the bracket toe at the end of the snipe. In general, this area measured perpendicular to the face plate, is to be not less than 60 per cent of the full cross-sectional area of the face plate, see Fig. II 1-5 as below.

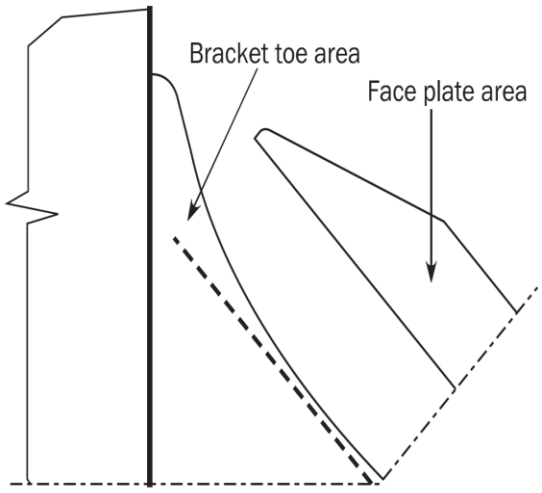

Fig. II 1-5
Bracket Toe Construction

1.13.2 Arrangements at intersections of continuous secondary and primary members

(a) Cut-outs for the passage of secondary members through the web of primary members, and the related collaring arrangements, are to be designed to minimise stress concentrations around the perimeter of the opening and in the attached hull envelope or bulkhead plating. The critical shear buckling stress of the panel in which the cut-out is made is to be investigated. Cut-outs for longitudinals are to be fitted with full collar plates in areas of high stress, e.g. in way of cross tie ends and floors under bulkhead stools in ore and ballast holds.

(b) Cut-outs are to have smooth edges, and the corner radii are to be as large as practicable, with a minimum of 20 percent of the breadth of the cut-out or 25 mm, whichever is the greater. It is recommended that the web plate connection to the hull envelope or bulkhead should end in a smooth tapered "soft toe". Recommended shapes of cut-out are shown in Fig. II 1-6 of this Chapter, but consideration will be given to other shapes on the basis of maintaining equivalent strength and minimizing stress concentration. Consideration is to be given to the provision of adequate drainage and unimpeded flow of air and water when designing the cut-outs and connection details.

(c) Asymmetrical secondary members are to be connected on the heel side to the primary member web plate. Additional connection by collars on the opposite side may be required.

(d) Symmetrical secondary members are to be connected by collars on one or both sides, as necessary.

(e) The cross-sectional areas of the connections are to be determined from the proportion of load transmitted through each component in association with its appropriate permissible stress.

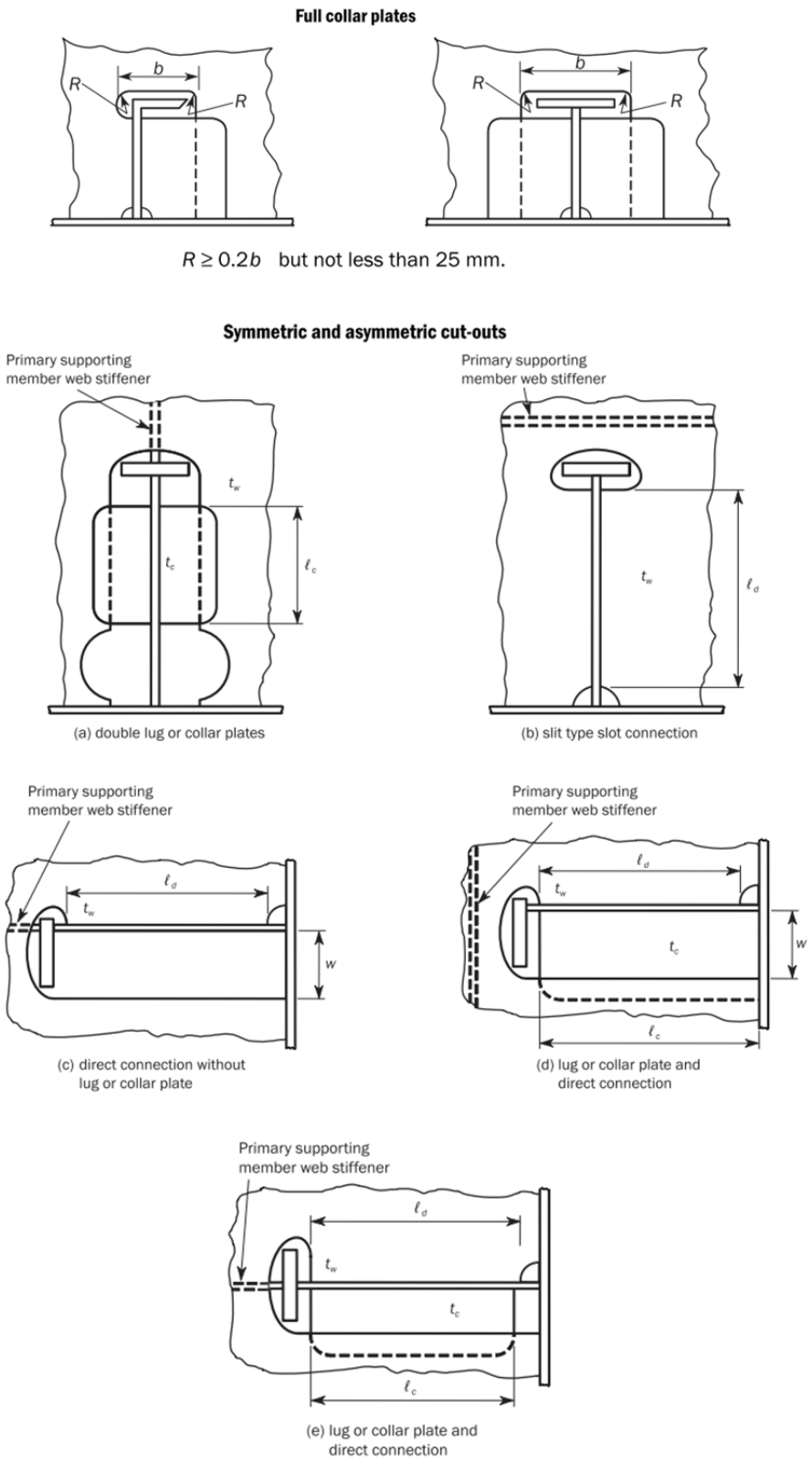

Fig. II 1-6
Cut-Outs and Connections

1.13.3 Openings

(a) Manholes, lightening holes and other cut-outs are to be avoided in way of concentrated loads and areas of high shear. In particular, manholes and similar openings are not to be cut in vertical or horizontal diaphragm plates in narrow cofferdams or double plate bulkheads within one-third of their length from either end, nor in floors or double bottom girders close to their span ends, or below the heels of pillars, unless the stresses in the plating and the panel buckling characteristics have been calculated and found satisfactory.

(b) Manholes, lightening holes and other openings are to be suitably framed and stiffened where necessary.

(c) Air and drain holes, notches and scallops are to be kept at least 200 mm clear of the toes of end brackets and other areas of high stress, see Fig. II 1-7 as below. Openings are to be well rounded with smooth edges. Details of scalloped construction are shown in Fig. II 1-7 as below. Closely spaced scallops are not permitted in higher tensile steel members. Widely spaced air or drain holes may be accepted, provided that they are of elliptical shape, or equivalent, to minimise stress concentration and are, in general, cut clear of the weld connection.

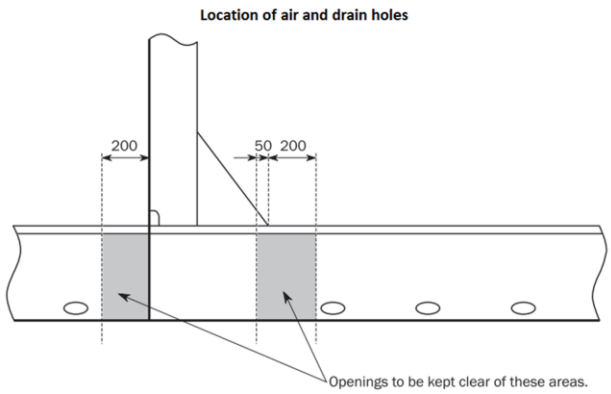

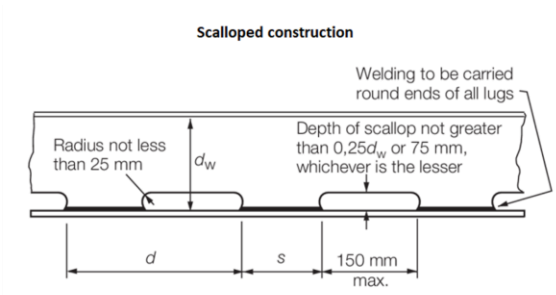

Fig. II 1-7
Air Hole, Drain Holes and Scallop

1.13.4 Sheerstrake and bulwarks

(a) Where an angled gunwale is fitted, the top edge of the sheerstrake is to be kept free of all notches and isolated welded fittings. Bulwarks are not to be welded to the top of the sheerstrake within the 0.5L amidships.

(b) Where a rounded gunwale is adopted, the welding of fairlead stools and other fittings to this plate is to be kept to the minimum, and the design of the fittings is to be such as to minimise stress concentration.

(c) Arrangements are to ensure a smooth transition from rounded gunwale to angled gunwale towards the ends of the ship.

(d) At the ends of superstructures where the side plating is extended and tapered to align with the bulwark plating, the transition plating is to be suitably stiffened and supported. Where freeing ports or other openings are essential in this plate, they are to be suitably framed and kept well clear of the free edge.

1.13.5 Fittings and attachments, general

The quality of welding and general workmanship of fittings and attachments are to be equivalent to that of the main hull structure. Visual examination of all welds is to be supplemented by non-destructive testing as considered necessary by the Surveyor.

1.13.6 Bilge keels and ground bars

(a) It is recommended that bilge keels should not be fitted in the forward 0.3L region on ships intended to navigate in severe ice conditions.

(b) Bilge keels are to be attached to a continuous ground bar as shown in Fig. II 1-8 of this Chapter. Butt welds in shell plating, ground bar and bilge keels are to be staggered.

(c) The minimum thickness of the ground bar is to be equal to the thickness of the bilge strake or 14 mm, whichever is the lesser.

(d) The material of the bilge keel and ground bar is to be of the same yield stress as the material to which they are attached. In addition, when the bilge keel extends over a length more than 0.15 L, the material of the bilge keel and ground bar is to be of the same grade as the material to which they are attached.

(e) The ground bar is to be connected to the shell with a continuous fillet weld and the bilge keel to the ground bar with a light continuous fillet weld.

(f) Direct connection between ground bar butt welds and shell plating, and between bilge keel butt welds and ground bar is to be avoided.

(g) The design of single web bilge keels is to ensure that failure to the web occurs before failure of the ground bar. In general, this may be achieved by ensuring the web thickness of bilge keels does not exceed that of the ground bar.

(h) The end details of bilge keels and intermittent bilge keels, where adopted, are to be as shown in Fig. II 1-9 of this Chapter.

(i) The ground bar and bilge keel ends are to be tapered or rounded. Where the ends are tapered, the tapers are to be gradual with ratios of at least 3:1, see Fig. II 1-9 of this Chapter. Where the ends are rounded, details are to be as shown in Fig. II 1-9 of this Chapter. Cut-outs on the bilge keel web within zone 'A' (see Fig. II 1-9 of this Chapter) are not permitted.

(j) The end of the bilge keel web is to be between 50 mm and 100 mm from the end of the ground bar, see Fig. II 1-9 of this Chapter.

(k) An internal transverse support is to be positioned as close as possible to halfway between the end of the bilge keel web and the end of the ground bar, see Fig. II 1-9 of this Chapter.

(l) Where an internal longitudinal stiffener is fitted in line with the bilge keel web, the longitudinal stiffener is to extend to at least the nearest transverse member outside zone 'A', see Fig. II 1-9 of this Chapter. In this case, the requirement of (j) above does not apply.

(m) Holes are to be drilled in the bilge keel butt welds. The size and position of these holes are to be as illustrated in Fig. II 1-8 of this Chapter. Where the butt weld has been subject to non-destructive examination the stop hole may be omitted.

(n) Bilge keels of a different design from that shown in Fig. II 1-8 and Fig. II 1-9 of this Chapter will be specially considered.

(o) A plan of the bilge keels is to be submitted for approval of material grades, welded connections and detail design.

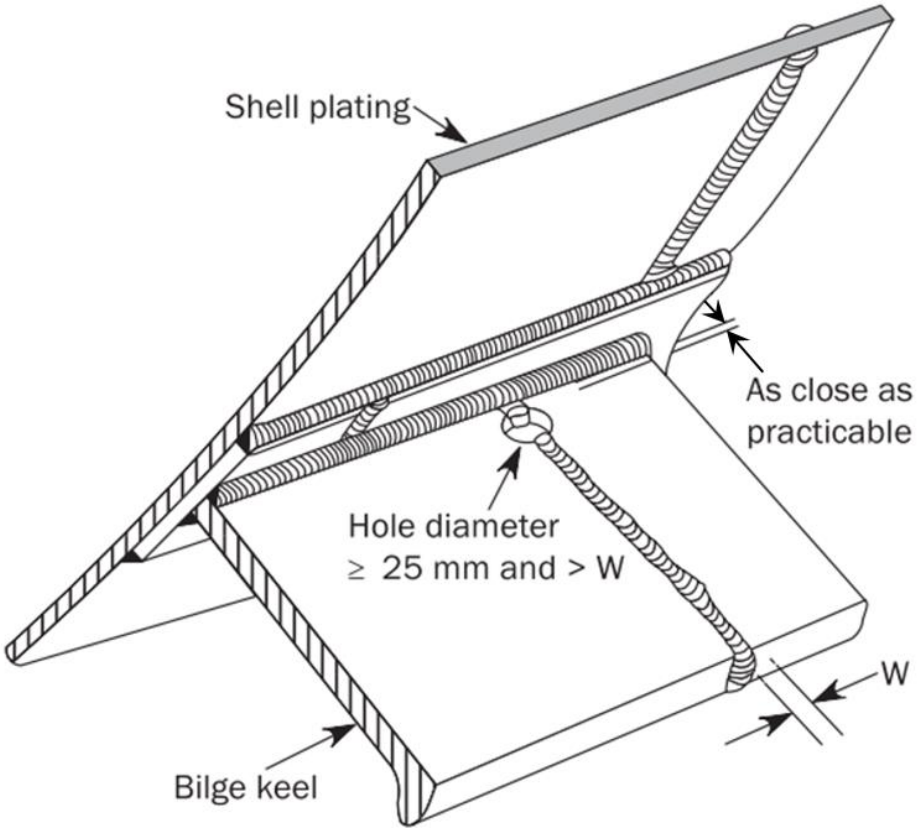

Fig. II 1-8
Bilge Keel Construction

1.13.7 Other fittings and attachments

(a) Gutterway bars at the upper deck are to be so arranged that the effect of main hull stresses on them is minimised.

(b) Minor attachments, such as pipe clips, staging lugs and supports, are generally to be kept clear of toes of end brackets, corners of openings and similar areas of high stress. Where connected to asymmetrical stiffeners, the attachments may be in line with the web providing the fillet weld leg length is clear of the offset face plate or flange edge. Where this cannot be achieved the attachments are to be connected to the web, and in the case of flanged stiffeners they are to be kept at least 25 mm clear of the flange edge. On symmetrical stiffeners, they may be connected to the web or to the centreline of the face plate in line with the web.

(c) Where necessary in the construction of the ship, lifting lugs may be welded to the hull plating but they are not to be slotted through. Where they are subsequently removed, this is to be done by flame or mechanical cutting close to the plate surface, and the remaining material and welding ground off. After removal the area is to be carefully examined to ensure freedom from cracks or other defects in the plate surface.

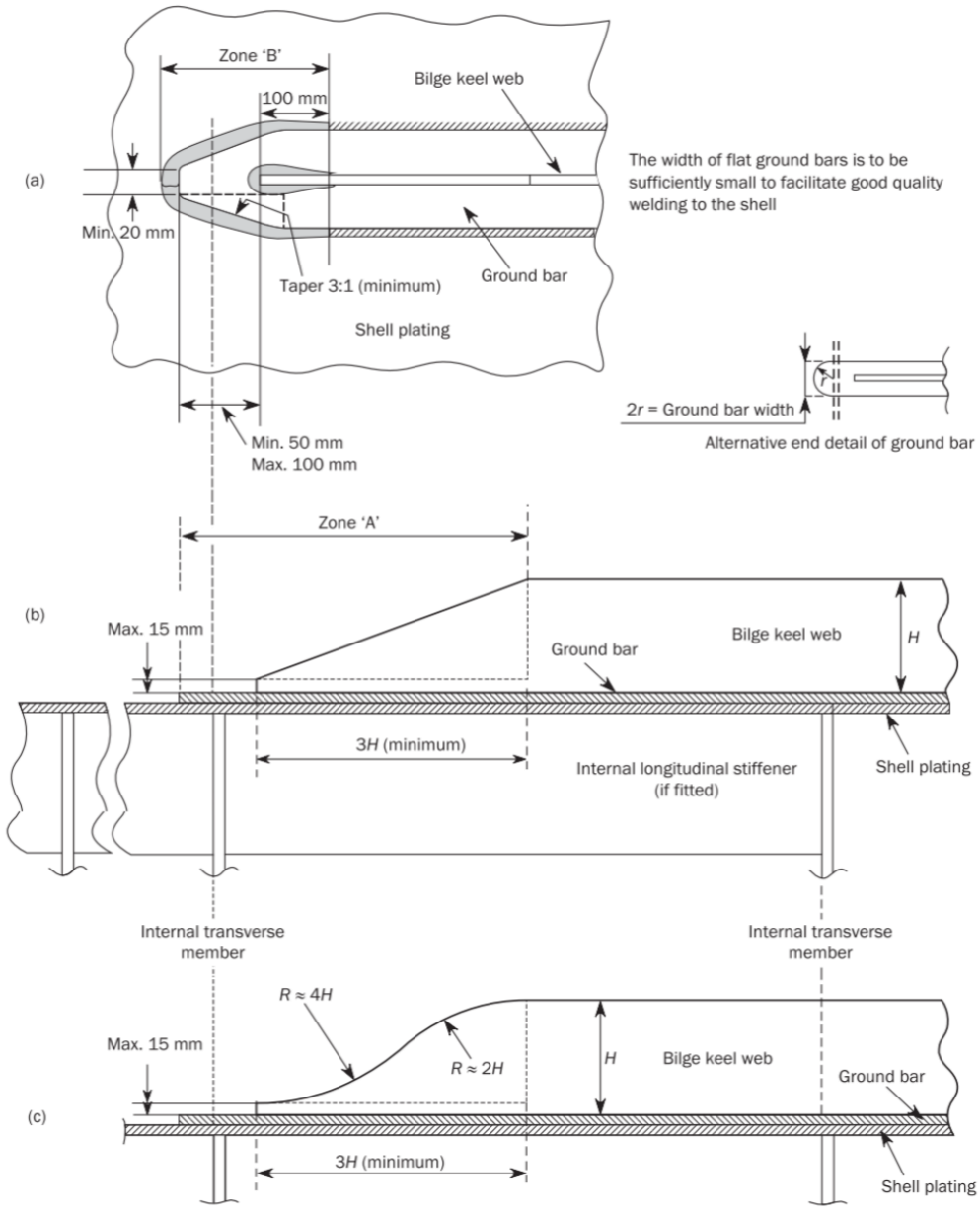

Fig. II 1-9
Bilge Keel End Design

Table II 1-1
Test Requirements for Tanks and Boundaries

Item No.	Tank or boundary to be tested	Test type	Test head or pressure	Remarks
1	Double bottom tanks(4)	Leak and structural (1)	The greater of - top of the overflow, - to 2.4 m above top of tank(2), or - to bulkhead deck	
2	Double bottom voids(5)	Leak	See 1.4.4(d)(iv)(4) through 1.4.4(d)(iv)(6) of this Part, as applicable	including pump room double bottom and bunker tank protection double hull required by MARPOL Annex I
3	Double side tanks	Leak and structural(1)	The greater of - top of the overflow, - to 2.4m above top of tank(2), or - to bulkhead deck	
4	Double side voids	Leak	See 1.4.4(d)(iv)(4) through 1.4.4(d)(iv)(6) of this Part, as applicable	
5	Deep tanks other than those listed elsewhere in this table	Leak and structural(1)	The greater of - top of the overflow, or - to 2.4 m above top of tank(2)	
6	Peak tanks	Leak and structural(1)	The greater of - top of the overflow, or - to 2.4m above top of tank(2)	After peak to be tested after installation of stern tube
7	Fore peak spaces with equipment	Leak	See 1.4.4(d)(iv)(3) through 1.4.4(d)(iv)(6) of this Part, as applicable.	
	Fore peak voids	Leak	See 1.4.4(d)(iv)(4) through 1.4.4(d)(iv)(6) of this Part, as applicable	
	Aft peak spaces with equipment	Leak	See 1.4.4(d)(iv)(3) through 1.4.4(d)(iv)(6) of this Part, as applicable	
	Aft peak voids	Leak	See 1.4.4(d)(iv)(4) through 1.4.4(d)(iv)(6) of this Part, as applicable	After peak to be tested after installation of stern tube
8	Cofferdams	Leak	See 1.4.4(d)(iv)(4) through 1.4.4(d)(iv)(6) of this Part, as applicable	
9	Watertight bulkheads	Leak (8)	See 1.4.4(d)(iv)(3) through 1.4.4(d)(iv)(6) of this Part, as applicable(7)	
	Superstructure end bulkhead	Leak	See 1.4.4(d)(iv)(3) through 1.4.4(d)(iv)(6) of this Part, as applicable	
10	Watertight doors below freeboard or bulkhead deck	Leak(6), (7)	See 1.4.4(d)(iv)(3) through 1.4.4(d)(iv)(6) of this Part, as applicable	
11	Double plate rudder blade	Leak	See 1.4.4(d)(iv)(4) through 1.4.4(d)(iv)(6) of this Part, as applicable	

12	Shaft tunnel clear of deep tanks	Leak(3)	See 1.4.4(d)(iv)(3) through 1.4.4(d)(iv)(6) of this Part, as applicable	
12	Shell doors	Leak(3)	See 1.4.4(d)(iv)(3) through 1.4.4(d)(iv)(6) of this Part, as applicable	
13	Weathertight hatch covers and closing appliances	Leak(3), (7)	See 1.4.4(d)(iv)(3) through 1.4.4(d)(iv)(6) of this Part, as applicable	Hatch covers closed by tarpaulins and battens excluded
14	Chain locker	Leak and structural(1)	Top of chain pipe	
15	L.O. sump. tanks and other similar tanks/spaces under main engines	Leak(9)	See 1.4.4(d)(iv)(3) through 1.4.4(d)(iv)(6) of this Part, as applicable	
16	Ballast ducts	Leak and structural(1)	The greater of - ballast pump maximum pressure, or - setting of any pressure relief valve	
17	Fuel Oil Tanks	Leak and structural(1)	The greater of - top of the overflow, - to 2.4m above top of tank(2), or - to top of tank(2) plus setting of any pressure relief valves, or - to bulkhead deck	

Notes:

(1) Refer to 1.4.4(d)(ii)(2) of this Part.

(2) The top of a tank is the deck forming the top of the tank excluding any hatchways.

(3) Hose Test may also be considered as a medium of the test. See 1.4.4(c)(ii) of this Part.

(4) Including tanks arranged in accordance with the provisions of SOLAS regulation II-1/9.4.

(5) Including duct keels and dry compartments arranged in accordance with the provisions of SOLAS II-1/11.2 and II-1/9.4 respectively, and/or oil fuel tank protection and pump room bottom protection arranged in accordance with the provisions of MARPOL Annex I, Chapter 3, Part A regulation 12A and Chapter 4, Part A, regulation 22 respectively.

(6) Where water tightness of watertight door has not been confirmed by prototype test, testing by filling watertight spaces with water is to be carried out. See SOLAS regulation II-1/16.2 and MSC/Circ.1176.

(7) As an alternative to the hose testing, other testing methods listed in 1.4.4(d)(iv)(7) through 1.4.4(d)(iv)(9) of this Part may be applicable subject to adequacy of such testing methods being verified. See SOLAS regulation II-1/11.1. For watertight bulkheads (item 11.1) alternatives to the hose testing may only be used where a hose test is not practicable.

(8) A “Leak and structural test”, see 1.4.4(d)(ii)(2) of this Part is to be carried out for a representative hold if intended for in-port ballasting. The filling level requirement for testing holds intended for in-port ballasting is to be the maximum loading that will occur in-port as indicated in the loading manual.

(9) Where L.O. sump tanks and other similar spaces under main engines intended to hold liquid form part of the watertight subdivision of the ship, they are to be tested as per the requirements of Item 5, Deep tanks other than those listed elsewhere in this table.

Table II 1-2
Application of Leak Test, Coating and Provision of Safe Access for Type of Welded Joints

Type of welded joints		Leak test	Coating(1)		Safe Access(2)	
			Before leak test	After leak test but before structural test	Leak test	Structural test
Butt	Automatic	Not required	Allowed(3)	N/A	Not required	Not required
	Manual or Semi-automatic(4)	Required	Not allowed	Allowed	Required	Not required
Fillet	Boundary including penetrations	Required	Not allowed	Allowed	Required	Not required

Notes:

(1) Coating refers to internal (tank/hold coating), where applied, and external (shell/deck) painting. It does not refer to shop primer.

(2) Temporary means of access for verification of the leak test.

(3) The condition applies provided that the welds have been carefully inspected visually to the satisfaction of the Surveyor.

(4) Flux Core Arc Welding (FCAW) semiautomatic butt welds need not be tested provided that careful visual inspections show continuous uniform weld profile shape, free from repairs, and the results of NDE testing show no significant defects.

Table II 1-3
Material Classes and Grades for Ships in General

Structural member category	Material class/grade
SECONDARY: A1. Longitudinal bulkhead strakes, other than that belonging to the Primary category A2. Deck plating exposed to weather, other than that belonging to the Primary or Special category A3. Side plating	- Class I within 0.4L amidships - Grade A/AH outside 0.4L amidships
PRIMARY: B1. Bottom plating, including keel plate B2. Strength deck plating, excluding that belonging to the Special category B3. Continuous longitudinal members above strength deck, excluding hatch coamings B4. Uppermost strake in longitudinal bulkhead B5. Vertical strake (hatch side girder) and uppermost sloped strake in top wing tank	- Class II within 0.4L amidships - Grade A/AH outside 0.4L amidships
SPECIAL: C1. Sheer strake at strength deck(1) C2. Stringer plate in strength deck(1) C3. Deck strake at longitudinal bulkhead, excluding deck plating in way of inner-skin bulkhead of double-hull ships(1)	- Class III within 0.4L amidships - Class II outside 0.4L amidships - Class I outside 0.6L amidships
C6. Bilge strake in ships with double bottom over the full breadth and length less than 150 m(1)	- Class II within 0.6L amidships - Class I outside 0.6L amidships
C7. Bilge strake in other ships(1)	- Class III within 0.4L amidships - Class II outside 0.4L amidships - Class I outside 0.6L amidships
C8. Longitudinal hatch coamings of length greater than 0.15L C9. End brackets and deck house transition of longitudinal cargo hatch coamings	- Class III within 0.4L amidships - Class II outside 0.4L amidships - Class I outside 0.6L amidships - Not to be less than Grade D/DH

(1) Single strakes required to be of Class III within 0.4L amidships are to have breadths not less than 800+5L (mm), need not be greater than 1800 (mm), unless limited by the geometry of the ship's design.

Table II 1-4
Minimum Material Grades for Ships with Length Exceeding 150 m and Single Strength Deck

Structural member category	Material grade
Longitudinal strength members of strength deck plating	Grade B/AH within 0.4L amidships
Continuous longitudinal strength members above strength deck	Grade B/AH within 0.4L amidships
Single side strakes for ships without inner continuous longitudinal bulkhead(s) between bottom and the strength deck	Grade B/AH within cargo region

Table II 1-5
Minimum Material Grades for Ships with Length Exceeding 250 m

Structural member category	Material grade
Shear strake at strength deck(1)	Grade E/EH within 0.4L amidships
Stringer plate in strength deck(1)	Grade E/EH within 0.4L amidships
Bilge strake(1)	Grade D/DH within 0.4L amidships

(1) Single strakes required to be of Grade E/EH and within 0.4L amidships are to have breadths not less than 800+5L (mm), need not be greater than 1800 (mm), unless limited by the geometry of the ship's design.

Table II 1-6
Material Grade Requirements for Classes I, II and III

Class	I		II		III	
As-built thickness, in mm	NSS	HSS	NSS	HSS	NSS	HSS
t ≤ 15	A	AH	A	AH	A	AH
15 < t ≤ 20	A	AH	A	AH	B	AH
20 < t ≤ 25	A	AH	B	AH	D	DH
25 < t ≤ 30	A	AH	D	DH	D	DH
30 < t ≤ 35	B	AH	D	DH	E	EH
35 < t ≤ 40	B	AH	D	DH	E	EH
40 < t ≤ 50	D	DH	E	EH	E	EH

Note :
NSS : Normal strength steel
HSS : Higher strength steel

Table II 1-7
Application of Material Classes and Grades – Structures Exposed at Low Temperature

Structural member category	Material class	
	Within 0.4L amidships	Outside 0.4L amidships
SECONDARY: Deck plating exposed to weather, in general Side plating above BWL Transverse bulkheads above BWL(5)	I	I
PRIMARY: Strength deck plating(1) Continuous longitudinal members above strength deck, excluding longitudinal hatch coamings Longitudinal bulkhead above BWL(5) Top wing tank bulkhead above BWL(5)	II	I
SPECIAL: Sheer strake at strength deck(2) Stringer plate in strength deck(2) Deck strake at longitudinal bulkhead(3) Continuous longitudinal hatch coamings(4)	III	II

Note:
(1) Plating at corners of large hatch openings to be specially considered. Class III or Grade E/EH to be applied in positions where high local stresses may occur.
(2) Not to be less than Grade E/EH within 0.4L amidships in ships with length exceeding 250 m.
(3) In ships with breadth exceeding 70 m at least three deck strakes to be Class III.
(4) Not to be less than Grade D/DH.
(5) Applicable to plating attached to hull envelope plating exposed to low air temperature. At least one strake is to be considered in the same way as exposed plating and the strake width is to be at least 600 mm.

Table II 1-8
Material Grade Requirements for Classes I at Low Temperature

Temperature	-20 / -25 ºC		-26 / -35 ºC		-36 / -45 ºC		-45 / -55 ºC	
As-built thickness, in mm	NSS	HSS	NSS	HSS	NSS	HSS	NSS	HSS
t ≤ 10	A	AH	B	AH	D	DH	D	DH
10 < t ≤ 15	B	AH	D	DH	D	DH	D	DH
15 < t ≤ 20	B	AH	D	DH	D	DH	E	EH
20 < t ≤ 25	D	DH	D	DH	D	DH	E	EH
25 < t ≤ 30	D	DH	D	DH	E	EH	E	EH
30 < t ≤ 35	D	DH	D	DH	E	EH	E	EH
35 < t ≤ 45	D	DH	E	EH	E	EH	-	FH
45 < t ≤ 50	E	EH	E	EH	-	FH	-	FH

Note :
NSS : Normal strength steel
HSS : Higher strength steel

Table II 1-9
Material Grade Requirements for Classes II at Low Temperature

Temperature	-20 / -25 ºC		-26 / -35 ºC		-36 / -45 ºC		-45 / -55 ºC	
As-built thickness, in mm	NSS	HSS	NSS	HSS	NSS	HSS	NSS	HSS
t ≤ 10	B	AH	D	DH	D	DH	E	EH
10 < t ≤ 20	D	DH	D	DH	E	EH	E	EH
20 < t ≤ 30	D	DH	E	EH	E	EH	-	FH
30 < t ≤ 40	E	EH	E	EH	-	FH	-	FH
40 < t ≤ 45	E	EH	-	FH	-	FH	-	-
45 < t ≤ 50	E	EH	-	FH	-	FH	-	-

Note :
NSS : Normal strength steel
HSS : Higher strength steel

Table II 1-10
Material Grade Requirements for Classes III at Low Temperature

Temperature	-20 / -25 ºC		-26 / -35 ºC		-36 / -45 ºC		-45 / -55 ºC	
As-built thickness, in mm	NSS	HSS	NSS	HSS	NSS	HSS	NSS	HSS
t ≤ 10	D	DH	D	DH	E	EH	E	EH
10 < t ≤ 20	D	DH	E	EH	E	EH	-	FH
20 < t ≤ 25	E	EH	E	EH	E	FH	-	FH
25 < t ≤ 30	E	EH	E	EH	-	FH	-	FH
30 < t ≤ 35	E	EH	-	FH	-	FH	-	-
35 < t ≤ 40	E	EH	-	FH	-	FH	-	-
40 < t ≤ 50	-	FH	-	FH	-	-	-	-

Note :
NSS : Normal strength steel
HSS : Higher strength steel

Table II 1-11
Brackets (Unit: mm)

Length of longer arm	Thickness		Breadth of flange	Length of longer arm	Thickness		Breadth of flange
	Plane	Flanged			Plane	Flanged	
150	6.5	-	-	700	14.0	9.5	70
200	7.0	6.5	30	750	14.5	10.0	70
250	8.0	6.5	30	800	-	10.5	80
300	8.5	7.0	40	850	-	11.0	85
350	9.0	7.0	40	900	-	11.0	90
400	10.0	8.0	50	950	-	11.5	90
450	10.5	8.0	50	1000	-	11.5	95
500	11.0	8.5	55	1050	-	12.0	100
550	12.0	8.5	55	1100	-	12.5	105
600	12.5	9.0	65	1150	-	12.5	110
650	13.0	9.0	65				

Chapter 2

Stems and Stern Frames

2.1 Stems

2.1.1 Plate stems

(a) The thickness of steel plate stems at the designed maximum load line is not to be less than that obtained from the following formula:

$$t = 1.5\sqrt{L - 50} + 3.5 \qquad \text{mm for } L \geq 90 \text{ m}$$

where:
L = Length of ship, in m.
t = Thickness of plate stem, in mm.

(b) Above and below the designed maximum load line, the thickness may be gradually tapered toward the stem head and the keel. At the upper end of stem it may be equal to the thickness of the side shell plating (at the fore end part) of the ship, and at the lower end of stem, it is to be equal to the thickness of the plate keel.

(c) Horizontal webs are to be fitted at intervals not exceeding 1 m. Where the stem radius is large, a center line stiffener may be required.

2.2 Stern Frames

2.2.1 Propeller Posts

(a) Propeller posts of cast steel stern frames and those of plate stern frames are to be of shape suitable for the stream line at the after part of hull, and the scantlings are to be equivalent to the standards given by the formulae and figures in Fig. II 2-1. Below the propeller boss, if shoe pieces are fitted, the breadth and thickness of propeller post are to be gradually increased in order to provide with strength and stiffness in proportion to those of the shoe pieces.

(b) The thickness of boss of propeller post is not to be less than that obtained from the following formula:

$$0.9L+10 \qquad \text{mm}$$

(c) The propeller posts of cast steel stern frames and those of plate stern frames are to be provided with ribs at a suitable interval. Where the radius of curvature is large, a center line stiffener is to be provided.

(d) In ships with relatively high speed for their length and in ships exclusively engaged in towing purposes, the scantlings of various parts of propeller posts are to be suitably increased.

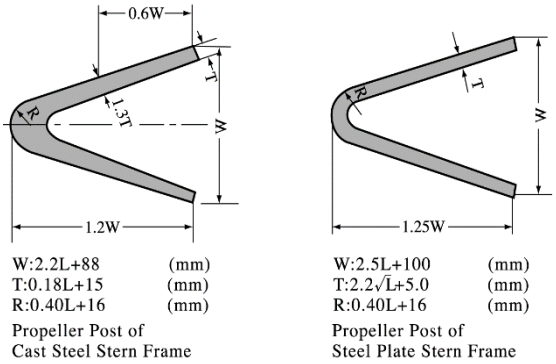

Fig. II 2-1
Standards of Propeller Posts

2.2.2 Shoe piece

(a) The section modulus about the vertical z-axis as shown in Fig. II 2-2 is not to be less than that obtained from the following formula:

$$Z_z = \frac{M_b K}{80} \qquad cm^3$$

(b) The section modulus about the transverse y-axis is not to be less than that obtained from the following formula:

$$Z_y = 0.5\ Z_z \qquad cm^3$$

(c) The sectional area is not to be less than that obtained from the following formula:

$$A_s = \frac{F_1 K}{48} \qquad mm^2$$

(d) At no section within the length *l*, the equivalent stress is to exceed 115/K (N/mm^2). The equivalent stress is to be determined by the following formula:

$$\sigma_e = \sqrt{\sigma_b^2 + 3\tau^2} \qquad N/mm^2$$

(e) The depth of the shoe piece is not to be less than half the breadth.

Where:

M_b	=	Bending moment at the section considered, in N-m.
	=	$F_1 x$ N-m
	≤	$F_1 l$ N-m
x	=	Distance (m) from the mid-point of the pintle bearing to the section considered, as shown in Fig. II 2-2 of this Chapter.
l	=	Distance (m) from the mid-point of the pintle bearing to the fixed point of the shoe piece, as shown in Fig. II 2-2 of this Chapter.
F_1	=	Supporting force in the pintle bearing, in N, normally F_1 =F/2.
F	=	Rudder force, in N. (See 24.2 of this Part).

σ_b = $\frac{M_b}{Z_Z(x)}$ N/mm^2

$Z_z(x)$ = Section modulus about z-axis at the particular section under consideration, in cm^3.

τ = $\frac{F_1}{A_S}$ N/mm^2

K = Material factor as specified in 1.5.2(a) or 1.5.2 (c) of this Part respectively.

2.2.3 Heel pieces in general are to extend forward by a distance not less than 3 frame spacings from the fore edge of the boss.

2.2.4 Rudder gudgeon

(a) The rudder gudgeon is to be an integral part of the stern frame; where special circumstances render it necessary to separate the gudgeon from the stern frame, the proposed design is to be specially submitted for approval.

(b) The bearing length, L_p, of the pintle is to be such that:

$D_p \leq L_p \leq 1.2\ D_p$

The length of the pintle housing in the gudgeon is not to be less than the pintle diameter, D_p. The thickness of the pintle housing is not to be less than 0.25 D_p.

(c) For ships specified in 24.3.3 of this Part, the thickness of the gudgeon is to be appropriately increased.

2.2.5 Rudder horn

(a) The rudder horn is to be designed as a curved transition into the hull plating, and special consideration is to be given to the effectiveness of the rudder horn plate in bending and to the stresses in the transverse web plates.

(b) The loads on the rudder horn as shown in Fig. II 2-3 are to be obtained from the following formula:

M_b = F_1 z N-m
≤ F_1 d N-m
Q = F_1 N
Mt = F_1 e(z) N-m

where:

M_b	=	Bending moment.	N-m
Q	=	Shear force.	N
M_t	=	Torsional moment.	N-m
F_1	=	Supporting force in the pintle bearing as given in 24.2.3.	N
e(z), z and d	=	As shown in Fig. II 2-3.	m

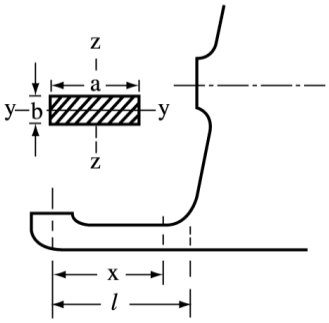

Fig. II 2-2
Shoe Piece

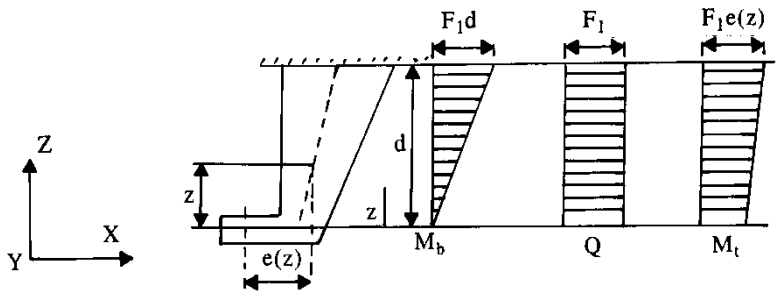

Fig. II 2-3
Loads on Rudder Horn

(c) The section modulus about the horizontal x-axis is not to be less than the value obtained from the following formula:

$$Z_x = \frac{M_b K}{67} \qquad cm^3$$

(d) The shear stress for the total section area A_h of the members in the y-direction is not to be larger than the value obtained from the following formula:

$$\tau = \frac{48}{K} \qquad N/mm^2$$

(e) At no section within the length d, the equivalent stress is to exceed 120/K (N/mm²). The equivalent stress is to be calculated by the following formula:

$$\sigma_e = \sqrt{\sigma_b^2 + 3(\tau^2 + \tau_t^2)} \qquad N/mm^2$$

where:

$$\sigma_b = \frac{M_b}{Z_x} \qquad N/mm^2$$

$$\tau = \frac{F_1}{A_h} \qquad N/mm^2$$

$$\tau_t = \frac{M_t 10^3}{2 A_t t_h} \qquad N/mm^2$$

A_h = Effective shear area of rudder horn in y-direction. mm²

A_t = Area in the horizontal section enclosed by the rudder horn. mm²

t_h	=	Plate thickness of rudder horn.	mm
K	=	Material factor as specified in 1.5.2(a) or 1.5.2 (c) of this Part respectively.	
Z_x	=	Actual section modulus.	cm^3

2.2.6 The stern frame is to be extended upward at the part of the propeller post and connected securely to the transom floor of thickness not less than the value obtained from the following formula:

0.035L + 8.5 mm

Chapter 3
Longitudinal Strength

3.1 General

3.1.1 Ships of L ≥ 90 m intended to be classed for unrestricted service are to have longitudinal strength in accordance with the requirements in 3.1 to 3.4 of this Chapter except that ships having one or more of the following characteristics are to be subject to special consideration:

(a) Unusual proportions: L/B ≤ 5, B/D ≥ 2.5.

(b) Ship length of 500 m or more.

(c) Large deck opening.

(d) Small block coefficient: $C_b < 0.6$.

(e) Large flare and high speed.

(f) Carriage of heated cargoes.

(g) Unusual type of design.

3.1.2 Ship of L ≥ 90 m, the requirements of loading manual and loading instrument in 3.5 of this Chapter are to be considered as applicable.

3.2 Bending Strength

3.2.1 The sign convention of bending moment is as shown in Fig. II 3-1.

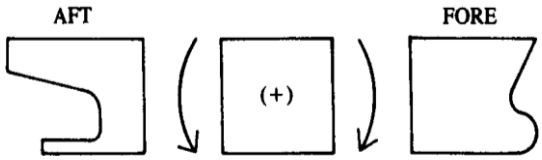

Fig. II 3-1
Sign Convention of Bending Moment

3.2.2 The required section modulus for 0.4 L amidship is to be obtained from the following equations, whichever gives greater value:

$$Z = \frac{M_t}{\sigma} \times 10^3 \quad cm^3, \text{ or}$$

$$Z_{min} = C_1 L^2 B (C_b + 0.7) K \quad cm^3$$

where:

Z = Required midship section modulus, in cm^3.

Z_{min} = Minimum section modulus, in cm^3.

M_t = Obtained as the maximum algebraic sum of still water bending moment and wave induced bending moment.
= $M_s + M_w$, in kN-m.
M_s = Still water bending moment at the transverse section under consideration along the length of hull, which is calculated from light ship, load weight and buoyancy of still water displacement, in kN-m.
M_w = Wave-induced bending moment at the transverse section under consideration along the length of the hull, which are obtained from the following formulae, in kN-m.
$M_{w(+)}$ = $+0.19C_1C_2L^2BC_b$ Hogging moment
$M_{w(-)}$ = $-0.11C_1C_2L^2B(C_b+0.7)$ Sagging moment
C_1 = Coefficient of ship length.
= $10.75 - \left(\frac{300 - L}{100}\right)^{1.5}$ $90\text{ m} \le L \le 300\text{ m}$
= 10.75 $300\text{ m} < L < 350\text{ m}$
= $10.75 - \left(\frac{L - 350}{150}\right)^{1.5}$ $350\text{ m} \le L \le 500\text{ m}$
C_2 = Coefficient along ship length as given in Fig. II 3-2.
L = Length of ship, in m.
B = Breadth of ship, in m.
C_b = Block coefficient at summer load water-line based on L as defined in 1.2.1. However, the value is to be taken as 0.6, where it is less than 0.6.
σ = Permissible bending stress.
= 175/K, in N/mm^2.
K = Material factor as specified in 1.5.2(a) of this Part.

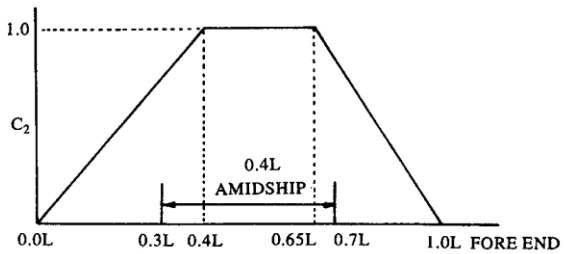

Fig. II 3-2
Coefficient C_2

3.2.3 Moment of inertia of the midship section I, is not to be less than the value obtained from the following formula:

$I = 3LZ$ cm^4

where:
I = Moment of inertia of the midship section, in cm^4.
L = Length of ship, in m.
Z = Required midship section modulus as specified in 3.2.2 above, in cm^3.

3.2.4 Bending strength at section other than amidship

(a) Bending strength at sections other than 0.4L amidships is to be determined according to the requirements of 11.2 of this Part. As a minimum, hull girder bending strength checks are to be carried out at the following locations:
(i) In way of the forward end of the engine room.
(ii) In way of the forward end of the foremost cargo hold.
(iii) At any locations where there are significant changes in hull cross-section.
(iv) At any locations where there are changes in the framing system.

Buckling strength of members contributing to the longitudinal strength and subjected to compressive and shear stresses is to be checked, in particular in regions where changes in the framing system or significant changes in the hull cross-section occur. The buckling evaluation criteria used for this check is determined by this Society. Continuity of structure is be maintained throughout the length of the ship. Where significant changes in structural arrangement occur adequate transitional structure is to be provided. For ships with large deck openings such as containerships, sections at or near to the aft and forward quarter length positions are to be checked. For such ships with cargo holds aft of the superstructure, deckhouse or engine room, strength checks of sections in way of the aft end of the aft-most holds, and the aft end of the deckhouse or engine room are to be performed.

(b) Where the Society considers that the application of requirements of (a) above is inappropriate, the bending strength at sections other than 0.4L amidships is to be determined according to the formula of $Z = M_t/\sigma$ given in 3.2.2 with necessary modifications.

3.2.5 Section modulus calculation

(a) In general, all of the following longitudinal members may be included in the calculation of the section modulus, provided that they are continuous or effectively developed within 0.4L amidships:
   (i) Deck plating of strength deck and other effective decks.
   (ii) Shell and inner bottom plating.
   (iii) Deck and bottom girders.
   (iv) Plating and longitudinal stiffeners of longitudinal bulkheads.
   (v) All longitudinals of deck, sides, bottom and inner bottom.
   (vi) Continuous trunks and longitudinal hatch coamings (if they are effectively supported by longitudinal bulkheads or deep girders).

(b) Deck openings on the strength deck are to be deducted from in the calculation of the section modulus. However, small openings not exceeding 2.5 m in length or 1.2 m in breadth need not be deducted provided that the sum of their breadths in any single transverse section is not more than $0.06(B - \sum b)$, where $\sum b$ is the sum of breadth of openings exceeding 1.2 m in breadth or 2.5 m in length, in m.

(c) Notwithstanding the requirements in (b), small deck openings on the strength deck need not be deducted, provided that the sum of their breadths or shadow area breadths in a single transverse section does not reduce the section modulus at deck or bottom by more than 3%, and provided that the height of lightening holes, draining holes and single scallops in longitudinals or longitudinal girders does not exceed 25% of the web depth, for scallops maximum 75 mm.

(d) Deck openings specified in (b) and (c) included the breadth in shadow area which is obtained by drawing two tangential lines with an opening angle of 30 degrees having the focus on the longitudinal lines of the ship.

(e) The section modulus at the strength deck is to be calculated by dividing the moment of inertia of the athwartship section about its horizontal neutral axis by the following distance (i) or (ii), whichever is greater:
   (i) Vertical distance from the neutral axis to the top of the strength deck at side.
   (ii) Distance obtained from the following formula:

$$y\left(0.9 + 0.2\frac{x}{B}\right) \qquad \text{m}$$

where:

x = Horizontal distance from the top of continuous strength member to the center line of the ship, in m.

y = Vertical distance from the neutral axis to the top of continuous strength member, in m.

In this case, x and y are to be measured to the point giving the largest value of the above formula.

(f) The section modulus at the bottom is to be calculated by dividing the moment of inertia of the athwartship section about its horizontal neutral axis by the vertical distance from the neutral axis to the top of keel.

(g) Longitudinal girders between multi-hatchways will be considered by special calculations.

3.3 Shearing Strength

3.3.1 Thickness of Shell Plating of Ships without Longitudinal Bulkheads

(a) The thickness of side shell plating is not to be less than the values of t_s obtained from the following two formulae at any transverse section under consideration along the length of the hull for all conceivable loading and ballast conditions.

$$t_s = 0.455|F_s + F_w(+)|\frac{m}{I} \quad \text{mm}$$

$$t_s = 0.455|F_s + F_w(-)|\frac{m}{I} \quad \text{mm}$$

where:

I	=	Moment of inertia of the transverse section under consideration about its horizontal neutral axis, in cm^4.
m	=	Moment of area about the horizontal neutral axis on the transverse section for longitudinal members above the considered position of side shell plating when the considered position is above the horizontal neutral axis, and below the considered position when the considered position is under the horizontal neutral axis, in cm^3.
F_s	=	Shearing force in still water at the transverse section under consideration along the length of the hull, which is calculated by a method deemed appropriate by the Society, in kN. The positive value of F_s, however, is to be defined as a positive value which is obtained assuming that downward loads are taken as positive values and are integrated in the forward direction from the aft end of the ship. See Fig. II 3-3.
F_w	=	Wave induced shearing force at the transverse section under consideration along the length of the hull, which are obtained from the following formulae, in kN:
$F_w(+)$	=	$+0.3C_1C_3LB(C_b+0.7)$
$F_w(-)$	=	$-0.3C_1C_4LB(C_b+0.7)$
C_1, L, B and C_b	=	As specified in 3.2.2.
C_3	=	Distribution factor as shown in Fig. II 3-4.
C_4	=	Distribution factor as shown in Fig. II 3-5.

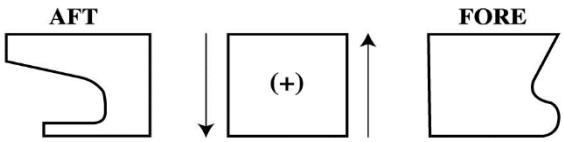

Fig. II 3-3
Sign Convention of Shear Force

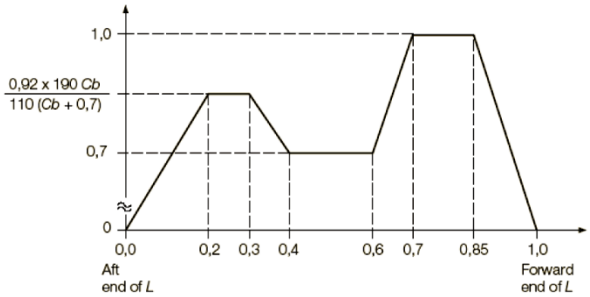

Fig. II 3-4
Distribution Factor, C_3

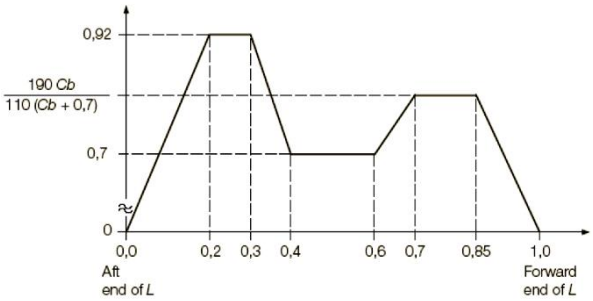

Fig. II 3-5
Distribution Factor, C_4

(b) In the case of ships which have bilge hopper tanks or top side tanks, or ships of which other longitudinal members below the strength deck are considered to share a part of the shearing force effectively, the thickness of side shell plating required by (a) may be reduced at the discretion of the Society.

3.3.2 Thickness of Side Shell Plating and Longitudinal Bulkhead Plating of Ships Having One to Four Rows of Longitudinal Bulkheads

(a) The thickness of side shell plating and longitudinal bulkhead plating of ships of types specified in Fig. II 3-6 is not to be less than the value of t_s obtained from the following formula at the transverse section under consideration along the length of hull for all conceivable loading and ballasting conditions. However, ships with double side hull construction provided with bilge hoppers in the double side hull structure are to be as deemed appropriate by the Society.

$$t_s = 0.91\frac{Fm}{I} \qquad \text{mm}$$

where:

I	=	As specified in 3.3.1.
m	=	As specified in 3.3.1.
F	=	Shear force acting upon the side shell plating or longitudinal bulkhead plating, the value of which is to be F(+) or F(−), whichever is greater:
F(+)	=	$\left\lvert \alpha\left(F_s + F_w(+)\right) + \Delta F \right\rvert$ kN
F(−)	=	$\left\lvert \alpha\left(F_s + F_w(-)\right) + \Delta F \right\rvert$ kN
F_s, F(+) and F(−)	=	As specified in 3.3.1.

α and ΔF may be based on those specified in Table II 3-1

k_1	=	Value is to be as specified in (i) to (iii) below for longitudinal bulkhead other than those provided in the double side hull.
k_2	=	Value is to be as specified in (i) to (iii) below for longitudinal bulkhead provided in the double side hull. However, values k_1 and k_2 may be suitably modified when

members are considered to share part of the shearing force.
(i) For parts not provided with longitudinal bulkhead: 0.0
(ii) For parts provided with a longitudinal bulkhead excluding the length of $0.5D_s$ from both ends: 1.0
(iii) Value obtained by linear interpolation for the intermediate parts between those specified in (i) and (ii).

A_s, A_L and A_{DL} = Sectional area of side shell plating amidships, longitudinal bulkhead plating amidships other than in the double side hull, and longitudinal bulkhead plating amidships in the double side hull, in mm^2.

W_a, W_b and W_c = Values obtained from the following formulae:
$W_a = h_a + h_d - d'$
$W_b = h_b + h_d - d'$
$W_c = h_c + h_d - d'$

d' = Draught at the part concerned in the loading condition under consideration, in m.

h_a, h_b, h_c and h_d = Water head, in m, converted from the weight of cargo or ballast in the center tanks, wing tanks, double side hull tank (excluding double bottom parts) and double bottom tanks in the condition under consideration, in m. Where the double hull forms one single tanks, the requirements apply separately to the portion that is the double side hull tank and the portion that is the double bottom tank. Where the double bottom tank is divided within either a, b or c, h_d is to be determined for respective ranges of the tank divided.

a, b and c = Half breadth of the center tank, breadth of wing tanks and breadth of double side hull tanks, in m.

S = Spacing of floors in double bottom, in m.

n_i = Number of floors in double bottom from the mid-point of transverse bulkheads to the section under consideration. Where the sign of n_i is to be negative when counted afterward and positive when counted forward. However, a swash bulkhead with an opening ratio of not less than 20% is not to be considered as transverse bulkhead. When a floor is provided at the mid-point between transverse bulkheads, n_i in this case, is to be obtained counting the floor as 0.5.

β = As specified below:
Where there is no effective center girder on double bottom: 1.0
Where there is an effective center girder on double bottom: 0.7

3.3.3 Where opening are provided in the shell plating, adequate consideration is to be given to the shearing strength and suitable compensation is to be made as necessary.

3.4 Buckling Strength

3.4.1 Application

These requirements apply to plate panels and longitudinals subject to hull girder bending and shear stresses , including the following members:

(a) For the compressive, bending and torsional buckling strength: longitudinal frames, beams and stiffeners; longitudinal bulkhead plating; and strength deck, bottom, and side shell plating of a longitudinal system in the midship part.

(b) For the shear buckling strength: side shell plating and longitudinal bulkhead plating within a reasonable distance forward and aft of each transverse bulkhead between bottom and deck plating.

(c) Members other than those in (a) and (b) above, of which the buckling strength is deemed necessary by the Society.

3.4.2 Elastic buckling stresses

(a) Elastic buckling of plates

(i) Compression

The ideal elastic buckling stress is given by:

$$\sigma_E = 0.9mE\left(\frac{t_b}{1000s}\right)^2 \qquad N/mm^2$$

For plating with longitudinal stiffeners (parallel to compressive stress):

$$m = \frac{8.4}{\Psi + 1.1} \qquad \text{for } 0 \le \Psi \le 1$$

For plating with transverse stiffeners (perpendicular to compressive stress):

$$m = c\left[1 + \left(\frac{s}{l}\right)^2\right]^2 \frac{2.1}{\Psi + 1.1} \qquad \text{for } 0 \le \Psi \le 1$$

where:

E	=	Modulus of elasticity of material
	=	2.06×10^5 N/ mm² for steel
t_b	=	Net thickness, in mm, of plating considering standard deductions equal to the values given in the Table II 3-2;
s	=	Shorter side of plate panel, in m,
l	=	Longer side of plate panel, in m,
c	=	1.3 when plating stiffened by floors or deep girders,
	=	1.21 when stiffeners are angles or T-sections,
	=	1.10 when stiffeners are bulb flats,
	=	1.05 when stiffeners are flat bars,
Ψ	=	Ratio between smallest and largest compressive σ_a stress when linear variation across panel.

(ii) Shear

The ideal elastic buckling stress is given by:

$$\tau_E = 0.9K_tE\left(\frac{t_b}{1000s}\right)^2 \qquad N/mm^2$$

where:

$$K_t = 5.34 + 4\left(\frac{s}{l}\right)^2$$

E, t_b, s and l are given in (i).

(b) Elastic buckling of longitudinals

(i) Column buckling without rotation of the cross section

For the column buckling mode (perpendicular to plane of plating) the ideal elastic buckling stress is given by:

σ_E = $0.001E(I_a)/(Al^2)$ N/ mm²

I_a = Moment of inertia, in cm^4, of longitudinal, including plate flange and calculated with thickness as specified in 3.4.2(a)(i),

A = Cross-sectional area, in cm^2, of longitudinal, including plate flange and calculated with thickness as specified in 3.4.2(a)(i),

l = Span, in m, of longitudinal,

A plate flange equal to the frame spacing may be included.

(ii) Torsional buckling mode

The ideal elastic buckling stress for the torsional mode is given by:

$$\sigma_E = \frac{\pi^2 E I_w}{10^4 I_P l^2}\left(m^2 + \frac{K}{m^2}\right) + 0.385E\frac{I_t}{I_P} \qquad N/mm^2$$

where:

K = $\frac{Cl^4}{\pi^4 E I_w}10^6$

m = Number of half waves, given by the following table:

	0<K<4	4≤K<36	36≤K<144	$(m-1)^2m^2 \le K < m^2(m+1)^2$
m	1	2	3	m

I_t = St. Venant's moment of inertia, in cm^4, of profile (without plate flange)

= $\frac{h_w t_w^3}{3}10^{-4}$ for flat bars (slabs)

= $\frac{1}{3}\left[h_w t_w^3 + b_f t_f^3\left(1 - 0.63\frac{t_f}{b_f}\right)\right]10^{-4}$ for flanged profiles

I_p = Polar moment of inertia, in cm^4, of profile about connection of stiffener to plate,

= $\frac{h_w^3 t_w}{3}10^{-4}$ for flat bars (slabs)

= $\left(\frac{h_w^3 t_w}{3} + h_w^2 b_f t_f\right)10^{-4}$ for flanged profiles

I_w = Sectorial moment of inertia, in cm^6, of profile about connection of stiffener to plate

= $\frac{h_w^3 t_w^3}{36}10^{-6}$ for flat bars (slabs)

= $\frac{t_f b_f^3 h_w^2}{12}10^{-6}$ for "tee" profiles

= $\frac{b_f^3 h_w^2}{12(b_f + h_w)^2}[t_f(b_f^2 + 2b_f h_w + 4h_w^2) + 3t_w b_f h_w]10^{-6}$ for angles and bulb profiles

h_w = Web height, in mm,

t_w = Web thickness, in mm, considering standard deductions as specified in 3.4.2(a)(i),

b_f = Flange width, in mm,

t_f = Flange thickness, in mm, considering standard deductions as specified in 3.4.2(a)(i). For bulb profiles the mean thickness of the bulb may be used.

l = Span of profile, in m,

s = Spacing of profiles, in m,

C = Spring stiffness exerted by supporting plate

= $\frac{k_p E t_p^3}{3s\left(1 + \frac{1.33 k_p h_w t_p^3}{1000 s t_w^3}\right)}10^{-3}$

k_p = $1-\eta_p$ not to be taken less than zero

t_p = Plate thickness, in mm, considering standard deductions as specified in 3.4.2(a)(i).

η_p = σ_a/σ_{Ep}

σ_a = Calculated compressive stress. For longitudinals, see 3.4.4(a).
σ_{Ep} = Elastic buckling stress of supporting plate as calculated in 3.4.2(a).

For flanged profiles, k_p need not be taken less than 0.1.

(iii) Web and flange buckling

For web plate of longitudinals the ideal elastic buckling stress is given by:

$$\sigma_E = 3.8E\left(\frac{t_w}{h_w}\right)^2 \qquad N/mm^2$$

For flanges on angles and T-sections of longitudinals, buckling is taken care of by the following requirement:

$$\frac{b_f}{t_f} \leq 15$$

b_f = Flange width, in mm, for angles, half the flange width for T-sections.
t_f = As built flange thickness.

3.4.3 Critical buckling stresses

(a) Compression

The critical buckling stress in compressiong σ_C is determined as follows:

σ_C = σ_E when $\sigma_E \leq \frac{\sigma_F}{2}$
= $\sigma_F\left(1 - \frac{\sigma_F}{4\sigma_E}\right)$ when $\sigma_E > \frac{\sigma_F}{2}$
σ_F = Yield stress of material, in N/mm^2, σ_F may be taken as 235 N/mm^2 for mild steel,
σ_E = Ideal elastic buckling stress calculated according to 3.4.2.

(b) Shear

The critical buckling stress in shear τ_C is determined as follows:

τ_C = τ_E when $\tau_E \leq \tau_F/2$
= $\tau_F\,[1 - \tau_F/(4\tau_E)]$ when $\tau_E > \tau_F/2$
τ_F = $\frac{\sigma_F}{\sqrt{3}}$
σ_F = As given in 3.4.3(a).
τ_E = Ideal elastic buckling stress in shear calculated according to 3.4.2(a)(ii).

3.4.4 Working stress

(a) For examination of buckling strength according to the requirements in this section, the working compressive stress of the member considered is to be obtained from the following formula, but is not to be less than 30/K.

$$\sigma_a = \frac{M_s + M_w}{I} y \cdot 10^5 \qquad N/mm^2$$

K = Material factor as specified in 1.5.2(a) of this part.
M_s = Longitudinal bending moment (kN-m), in still water as given in 3.2.2,

M_w = Wave induced longitudinal moment (kN-m) as given in 3.2.2,
I = Moment of inertia, in cm^4, at the transverse section considered.
y = Vertical distance, in m, from neural axis to the location of the member considered in the transverse section.

For members located above the neutral axis in the transverse section, the maximum values of M_s and M_w are to be taken in sagging condition, and for members located below the neutral axis, the maximum values of M_s and M_w are to be taken in hogging condition.

(b) For examination of buckling strength according to the requirements in this section, the working shearing stress of the member considered is to be obtained from the following (i) or (ii).

(i) Ships without longitudinal bulkhead

$$\tau_a = \frac{0.5mF}{It} \cdot 10^2 \qquad N/mm^2$$

where:
F = Shearing force as specified in 3.3.1(a), the value of whichever is greater:
$|F_s + F_w(+)|$ or $|F_s + F_W(-)|$ kN
m = Moment of area, in cm^3, of the athwartship section considered, as specified in 3.3.1(a)
I = Moment of inertia, in cm^4, as in 3.4.4(a)
t = Thickness, in mm, of the member considered

(ii) Ships with longitudinal bulkhead

$$\tau_a = \frac{mF}{It} \cdot 10^2 \qquad N/mm^2$$

where:
F = Shearing force as specified in 3.3.2(a)
m, I and t = As specified in 3.4.4(b)(i)

3.4.5 Scantling criteria

(a) Buckling Stress

The design buckling stress σ_c of plate panels and longitudinals is not to be less than:

$$\sigma_c \geq \beta\sigma_a$$

where:
β = 1 for plating and for web plating of stiffeners (local buckling).
β = 1.1 for stiffeners.

The critical buckling stress τ_C of plate panels is not to be less than:

$$\tau_c \geq \tau_a$$

3.5 Loading Manual and Loading Instrument

3.5.1 Where a loading manual and loading instrument are provided onboard, they are to be complied with the requirements of Part II, Chapter 3, 3.5 of the Rules for Steel Ships.

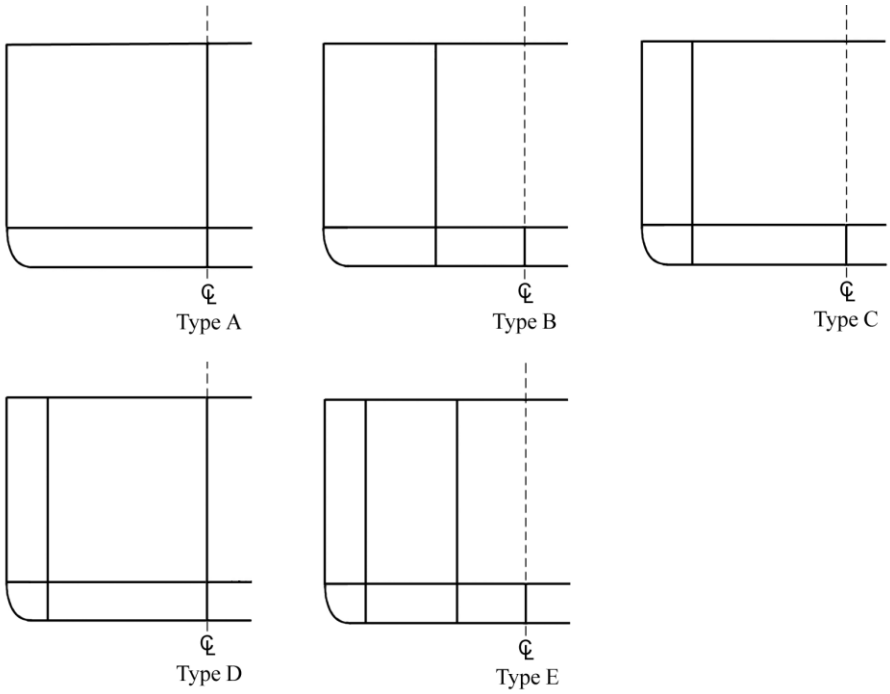

Fig. II 3-6
Types of Ships with Longitudinal Bulkheads

Table II 3-1
Values of α and ΔF

Type	Application	$\alpha = \alpha_1 \cdot \alpha_2$		$\Delta F = n_i(R - \alpha f)$	
		α_1	α_2	R	f
A	Side shell	$0.5 - 0.575\frac{k_1 A_L}{2A_s + A_L}$	1	$4.9W_b bS$	$19.6W_b bS$
	Longitudinal bulkhead	$0.575\frac{k_1 A_L}{2A_s + A_L}$	2	$9.8W_b bS$	
B	Side shell	$0.5 - 0.55\frac{k_1 A_L}{A_s + A_L}$	1	$4.9W_b bS$	$19.6(W_a a + W_b b)S$
	Longitudinal bulkhead	$0.55\frac{k_1 A_L}{A_s + A_L}$		$9.8(\beta W_a a + 0.5W_b b)S$	
C	Side shell	0.5	$1 - \frac{1.06k_2 A_{DL}}{A_s + A_{DL}}$	$4.9(\beta W_a a + W_c c)S$	$19.6(W_a a + W_c c)S$
	Longitudinal bulkhead		$\frac{1.06k_2 A_{DL}}{A_s + A_{DL}}$		
D	Side shell	$0.5 - \frac{0.675k_1 A_L}{2(A_s + A_{DL}) + A_L}$	$1 - \frac{1.05k_2 A_{DL}}{A_s + A_{DL}}$	$4.9(0.5W_b b + W_c c)S$	$19.6(W_b b + W_c c)S$
	Outer longitudinal bulkhead		$\frac{1.05k_2 A_{DL}}{A_s + A_{DL}}$		
	Center longitudinal bulkhead	$\frac{0.675k_1 A_L}{2(A_s + A_{DL}) + A_L}$	2	$9.8W_b bS$	
E	Side shell	$0.5 - \frac{0.615k_1 A_L}{A_s + A_{DL} + A_L}$	$1 - \frac{1.04k_2 A_{DL}}{A_s + A_{DL}}$	$4.9(0.5W_b b + W_c c)S$	$19.6(W_a a + W_b b + W_c c)S$
	Outer longitudinal bulkhead		$\frac{1.04k_2 A_{DL}}{A_s + A_{DL}}$		
	Inner longitudinal bulkhead	$\frac{0.615k_1 A_L}{A_s + A_{DL} + A_L}$	1	$9.8(\beta W_a a + 0.5W_b b)S$	

Table II 3-2
Net Thickness of Plating, t_b

Structure	Standard deduction (mm)	Limit values min-max (mm)
Compartments carrying dry bulk cargoes One side exposure to ballast and/or liquid cargo Vertical surfaces and surfaces sloped at an angle greater than 25° to the horizontal line	0.05t	0.5 - 1
One side exposure to ballast and/or liquid cargo Horizontal surfaces and surfaces sloped at an angle less than 25° to the horizontal line Two side exposure to ballast and/or liquid cargo Vertical surfaces and surfaces sloped at an angle greater than 25° to the horizontal line	0.10t	2 - 3
Two side exposure to ballast and/or liquid cargo Horizontal surfaces and surfaces sloped at an angle less than 25° to the horizontal line	0.15t	2 - 4

Chapter 4

Single Bottoms

4.1 Floors

4.1.1 Scantling of floors.

(a) Floors are to be fitted at every frame and to have the scantling necessary to obtain section modulus as obtained from the following formula:

$SM = 4.3\ s\ d\ l^2 \quad cm^3$

where:

s = The spacing of floor, in m.

d = Draught or 0.66 the depth, whichever is greater, in m.

l = Unsupported span of floor in m, generally measured on upper edge of floor from side to side and normally the value of *l* is to be taken not less than 0.7B.

(b) The depth of floor plates at centerline is not to be less than 0.0625*l*, in m.

(c) The thickness of floor plates is to be maintained throughout the midship one-half ship length, and is not to be less than:

$t = 0.01\ h + 3 \quad mm$

where:

h = Depth of floor plates at centerline, in mm.

(d) The thickness of floor plates may be reduced by 10% at 0.1L from the ends, however, in the flat part of bottom forward, this reduction is not to be made.

4.1.2 Face plates and flanges

(a) The floors are to be stiffened at their upper edge with face plates to make section modulus not less than required by 4.1.1(a) of this Part.

(b) In the case of flanged plate floors, the effective width of flanges is to have the same sectional area as that required for face plates.

(c) If face plates are cut at the center keelson, care must be taken that strength is transferred efficiently by the face plates.

4.1.3 For floors in engine room and under the boiler bearer:

(a) The depth of the floors under the engine seating is to be increased to provide an efficient support and the thickness is to be increased by 1 mm to that given in 4.1.1(c) of this chapter and not to be less than the center keelson plate.

(b) The thickness of floor plates in the engine room is to be increased under boilers by at least 2 mm to that given in 4.1.1(c) of this chapter.

(c) The face plate area is to be doubled to that given in 4.1.2(a) of this Part.

4.1.4 Flanging instead of face plates is not permitted in the engine room, under the boiler bearer and in way of the strengthening of the bottom forward.

4.1.5 The upper edge of floors at any part is not to be below the level of the upper edge of floors at the center line.

4.1.6 Side frames are to be efficiently attached to floor plates. Where the rise of floors is small, the side frames are to be provided with brackets at their lower end.

4.1.7 Lighting holes may be provided in floor plates. Where the holes are provided, appropriate strength compensation is to be made by increasing the floor depth or by some other suitable means if deemed necessary.

4.1.8 Connection between side frame and floor

The size of side frame bracket, which is the connection between side frame and floor, as shown in Fig. II 4-1, is to be in accordance with the following requirements, and the free edge of bracket is to be stiffened also.

(a) The brackets are to extend to the height above the top of keel higher than twice the required depth of floors at the centre line.

(b) The arm length of brackets measured from the outer edge of frames to the bracket toe along the upper edge of floors, is not to be less than the required depth of floors at the centre line.

(c) The thickness of brackets is not to be less than that of the floors required in 4.1.1.

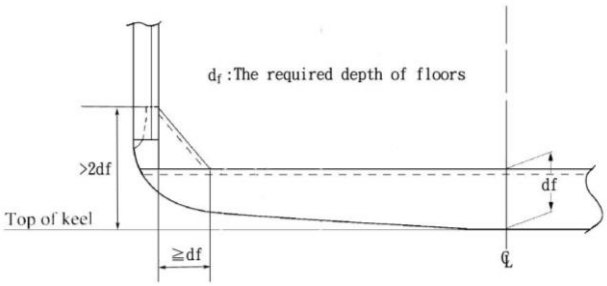

Fig. II 4-1
Side Frame Bracket

4.2 Center Keelsons

4.2.1 Center keelsons are to extend as far forward and aft as practicable. The depth is not to be less than the floor.

4.2.2 The scantling of center keelsons is to be obtained from the following formula:

(a) Minimum thickness of vertical plates and horizontal top plates amidships:

$t = 0.064\,L + 5.5$ mm

(b) Minimum thickness of vertical plates and horizontal top plates at ends:

$t = 0.05 L + 5.0$ mm

(c) Sectional area of horizontal top plates amidships:

$A = 0.7 L + 10$ cm^2

(d) Horizontal top plate sectional area may be reduced by 10% at ends.
where:

L = Length of ship, in m.

4.2.3 For ships with length less than 50 m, where a horizontal plate is used as the center keelson on the top of the floor, it is to be stiffened between floors.

4.2.4 Where the center keelson is cut at bulkheads, the longitudinal strength is to be efficiently maintained.

4.3 Side Keelsons

4.3.1 Side Keelsons are to extend as far forward and aft as practicable.

4.3.2 The minimum thickness of vertical plates and face plates of side keelsons amidships is to be obtained from the following formula:

$t = 0.05 L + 5.0$ mm

where:
L = Length of ship, in m.
The thickness may be reduced by 10% at ends.

4.3.3 Face plate area of side keelsons

(a) The face plate area of side keelsons is to be obtained from the following formula:

$A = 0.2 L + 6$ cm^2

where:
L = Length of ship, in m.

(b) The face plate area is to be maintained continuously amidships, but may be reduced by 10% at ends.

4.3.4 Spacing of side keelsons

(a) Side keelsons are to be so arranged that the spacing is not more than 2.15 m between the center keelson and the first side keelson, between keelsons, or between the outboard side keelson and the lower turn of the bilge.

(b) Additional side keelsons are to be fitted in the machinery space.

4.3.5 In ships having a partial double bottom, side keelsons are to extend at least 3 frame spacings into the double bottom.

4.4 Strengthening of Bottom Forward

4.4.1 The strengthening of the bottom structure forward is to be in accordance with the requirements in Chapter 8 of this Part.

4.5 Pumping and Drainage

4.5.1 Efficient provision is to be made to permit water from every part of the bottom to reach pump suctions.

Chapter 5

Double Bottoms

5.1 General

5.1.1 Double bottoms are to be made as wide as possible, and not lower at any part than a plane parallel to the keel line and which is located not less than an upward vertical distance h measured from the keel line.

h = B/20

Where B is the ship moulded breadth

However, in no case is the value of h to be less than 0.76 m, and need not be taken greater than 2.0 m.

5.1.2 The double bottom is to be fitted extending from the collision bulkhead to the after peak bulkhead.

5.1.3 When deemed appropriate by the Society, the double bottom may be omitted wholly or partially. In this case, the arrangement and construction are to be specially considered.

5.1.4 The requirements of this Chapter may be suitably modified for the partial double bottom.

5.1.5 If double bottoms of different depths are arranged, efficient transmission of strength within 0.6L amidships is to be provided.

5.1.6 The strengthening of the bottom structure forward is to be in accordance with the requirements in Chapter 8 of this Part.

5.1.7 Efficient provision is to be made for the free passage of air and water from every part of the tank to air pipes and the suctions.

5.1.8 The scantling of members in double bottom tanks intended to be deep tanks are to be in accordance with the requirements in Chapter 16. However, the thickness of the inner bottom plating need not be increased by 1.0 mm as given for top plating of deep tanks in 16.2.7 of this Part.

5.2 Center Girders

5.2.1 The scantling of center girders is to be obtained from the following formula:

(a) The depth of center girder plate is not to be less than B/16 unless specially approved by the Society.

(b) Thickness of center girder plate:

The thickness of the center girder plates is not to be less than that provided by the following requirements (i) and (ii) whichever is greater:

(i) $$t = C_1 K \frac{SBd}{d_0 - d_1}\left(2.6\frac{x}{l_H} - 0.17\right)\left[1 - 4\left(\frac{y}{B}\right)^2\right] + 2.5 \quad \text{mm}$$

Where:

K = Material factor as specified in 1.5.2(a) of this Part

S = Distance (m) between the centres of two adjacent spaces from the girder under consideration to the adjacent longitudinal girders or the line of toes of tank side brackets

d_0 = Depth (m) of the girder under consideration

d_1 = Depth (m) of the opening at the point under consideration

l_H = Length (m) of the hold

x = Longitudinal distance (m) between the centre of l_H of each hold and the point under consideration, but not taken less than 0.2 l_H and more than 0.45l_H

y = Transverse distance (m) from the centre line of the ship to the longitudinal girder

C_1 = Coefficient given by the following formulae:

- Longitudinal framing:
  $\frac{3 - B/l_H}{103}$, but not to be taken less than 1/40 and more than 1/64.
- Transverse framing:
  $\frac{3 - B/l_H}{90}$, but not to be taken less than 1/35 and more than 1/56.

(ii) $t = \frac{C_1' d_0}{\sqrt{K}} K + 2.5$ mm

Where:

C_1' = Coefficient obtained from Table II 5-1 as below depending on S_1/d_0

S_1 = Spacing of the brackets or stiffeners provided on the considered girder

K = Material factor as specified in 1.5.2(a) of this Part

d_0 = Depth (m) of the girder under consideration

Table II 5-1
Values of C_1'

S_1/d_0		0.3 and under	0.4	0.5	0.6	0.7	0.8	0.9	1.0	1.2	1.4	1.6 and over
C_1'	Center girder	4.4	5.4	6.3	7.1	7.7	8.2	8.6	8.9	9.3	9.6	9.7
	Side girder	3.6	4.4	5.1	5.8	6.3	6.7	7.0	7.3	7.6	7.9	8.0

(c) Where the boiler is mounted on the tank top, the thickness of center girder plate in way of the boiler is to be suitably increased.

5.2.2 Center girders are to extend as far forward and aft as practicable and to be attached to stern frames as far as possible.

5.2.3 Center girder plates are to be continuous within the midship 0.75L.

5.2.4 For the double bottom of longitudinal system, the center girders are to be suitably stiffened between floors and docking brackets of scantling not less than the following requirements are to be provided:

(a) The brackets are to be of a depth not less than 0.08 times the centre girder depth, and of a thickness not less than that obtained from the following formula.

$$t = 0.6\sqrt{L} + 2.5 \qquad \text{mm}$$

(b) The brackets are to extend from the center girder to the adjacent longitudinal.

(c) The brackets are to be spaced not more than 1.75 m. Where the spacing of these brackets exceeds 1.25 m, additional stiffeners are to be provided on the center girder plates.

5.3 Side Girders and Brackets Inside Tank

5.3.1 The thickness of the side girders is not to be less than that required in 5.2.1 (b) of this Chapter. Where the boiler is mounted on the tank top, the thickness of side girders is to be suitably increased.

5.3.2 Side girders may be fitted intercostally between floors

5.3.3 Side girders in 0.5L amidships and aft are to be so arranged that the spacing between the center girder and the first side girder, between the girders, or between the outboard side girder and the center of the margin plate is not to be more than 4.6 m.

5.3.4 Additional side girders of full or half depth are to be fitted under the machinery space, the thrust seating and the widely spaced pillar.

5.3.5 The thickness of brackets inside tanks is to be as given in 5.2.4(a) of this Chapter.

5.4 Solid Floors

5.4.1 Scantling of solid floors

(a) The thickness of the solid floor plates inside tanks, in holds and engine room is not to be less than that obtained from the following requirements (i) and (ii) whichever is greater.

(i) $t_1 = C_2 K \frac{SB'd}{d_0 - d_1}\left(\frac{2y}{B''}\right) + 2.5$ mm

Where:

C_2 = Coefficient obtained from Table II 5-2 of this Chapter depending on B/l_H

K = Material factor as specified in 1.5.2(a) of this Part.

S = Spacing (m) of solid floors

B' = Distance (m) between the lines of toes of tank side brackets at the top of inner bottom plating at the midship part

B" = Distance (m) between the lines of toes of tank side brackets at the top of inner bottom plating at the position of the solid floor

y = Transverse distance (m) from the centreline to the point under consideration, but not to be taken less than B"/4 and more than B"/2.

d_0 = Depth (m) of the solid floor at the point under consideration

d_1 = Depth (m) of the opening at the point under consideration

(ii) $t_2 = 8.6 \times \sqrt[3]{\frac{H^2 d_0^2}{C_2' K}(t_1 - 2.5)} + 2.5$ mm

Where

t_1 = Thickness obtained from 5.4.1(a)(i) above

C_2' = Coefficient given in Table II 5-3 depending on the ratio of the spacing of stiffener S_1 (m) to d_0

K = Material factor as specified in 1.5.2(a) of this Part.

H = Value obtained in accordance the cases as below:

	Cases	H
(a)	Slots of depth d_1 (m) on solid floors without reinforcement	$\begin{cases} \sqrt{4\left(\frac{d_1}{S_1}\right) - 1.0} & \text{for } d_1/S_1 > 0.5 \\ 1.0 & \text{for } d_1/S_1 \le 0.5 \end{cases}$
(b)	Openings of major diameter ∅ (m) on solid floors without reinforcement	$1 + 0.5\frac{\varnothing}{d_0}$
(c)	Slots and Openings on solid floors without reinforcement	(a)×(b)
(d)	Where (a), (b) and (c) are not applicable	1.0

Table II 5-2
Values of C_2

B/l_H		Longitudinal framing	Transverse framing	
Above	Below		Where solid floors are provided at every frame	Elsewhere
	0.4	0.029		0.020
0.4	0.6	0.027		0.019
0.6	0.8	0.024		0.017
0.8	1.0	0.022		0.015
1.0	1.2	0.019		0.013
1.2		0.017		0.012

Table II 5-3
Values of C_2'

S_1/d_0	0.3 and under	0.4	0.5	0.6	0.7	0.8	0.9	1.0	1.2	1.4 and over
C_2'	64	38	25	19	15	12	10	9	8	7

(b) Where the boiler is mounted on the tank top, the thickness of the floor in way of the boiler is to be suitably increased.

5.4.2 Solid floors are to be fitted:

(a) On every frame under the machinery and the transverse boiler seatings.

(b) On every frame or alternate frame in way of strengthening of the bottom structure forward as specified in Chapter 8 of this Part.

(c) Under the transverse bulkhead.

(d) Except in cases of (a), (b) and (c), at intervals not exceeding 3.60 m in association with the intermediate open floor or the longitudinal framing of the double bottom.

5.4.3 Tank end floors

(a) Tank end floors are to be so arranged that the subdivision of the bottom generally corresponds to that of the ship.

(b) Tank end floors are to be of the thickness required for deep tank boundaries accordingly to Chapter 16 of this Part.

5.4.4 Oil tight cofferdams are to be provided in double bottoms between compartments for carrying oil and fresh water.

5.4.5 Solid floors under the thrust seating and under the pillar are to be specially strengthened.

5.4.6 Where the depth of the double bottom exceeds 900 mm, tank end floors are to be fitted with stiffeners whose scantling complies with the requirements in Chapter 16 of this Part.

5.5 Open Floors

5.5.1 Open floors are to be fitted at each frame where solid floors are not fitted.

5.5.2 Bottom frames and reverse frames

(a) The section modulus of bottom and reverse frames on the open floor are not to be less than that obtained from the following formula:

$8\ s\ h\ l^2\ cm^3$

where:

l = Span, in m, specified as follows:

= The distance between the connecting bracket on the center girder and the margin plate, where the side girder is not fitted.

= The greatest distance between the support given by the side girder and the bracket, where the side girder is fitted.

s = Frame spacing, in m.

h = The vertical distance, in m.

= The vertical distance, in m, measured from the top of keel to the load line, or to the line corresponding to 0.66 the depth to the free-board or bulkhead deck, whichever is the greater, where the bottom frames and the reverse frames are fitted with the strut.

= The vertical distance, in m, measured from the top of keel to the load line, or to the line corresponding to 0.66 the depth to the freeboard or bulkhead deck, or to the top of the deep tank, whichever is the greatest, where the bottom frames and the reverse frames are fitted with the strut in way of the deep tank.

= The vertical distance, in m, measured from the top of the double bottom, where the bottom frames and the reverse frames are not fitted with the struts.

(b) Where struts are fitted between brackets and side girders and spaced not more than 1.5 m apart, the section modulus of the bottom and reverse frame may be reduced to half that given in 5.5.2(a) of this Chapter.

5.5.3 Strengthening of bottom frames and reverse frames

(a) The thickness of bottom frames is to be increased by 1 mm in the boiler space.

(b) The thickness of reverse frames is to be increased by 2 mm in the boiler space.

5.5.4 Struts

(a) Struts, if fitted to reduce the unsupported span of frames is to be of a vertical angle with a sectional area not less than that obtained from the following formula:

$2.82\ s\ h\ b \qquad cm^2$

where:

b = The breadth of the area supported by the vertical strut, in m.

s and h = As defined in 5.5.2 of this Chapter.

(b) Struts are to be increased 1.5 mm in thickness in way of the boilers.

5.5.5 Center and side brackets

(a) The frames and reverse frames are to be connected to the center girder and the margin plate by the center and the side bracket of a thickness required for the adjoining solid floor.

(b) Center and side brackets are to have a breadth not less than 0.05B.

(c) The free edge of bracket is to be properly stiffened.

5.5.6 At side girders, bottom and reverse frames are to be supported by welded flat bars having the same depth as the reverse frames and the same thickness as the side girder plates.

5.6 Longitudinal Framing in Double Bottom

5.6.1 For requirements not specified in this Section, pertinent provisions in other Sections are to apply.

5.6.2 The standard spacing of longitudinal frames is obtained from the following formula:

s = 2L + 550 mm, but in no case over 1000 mm.

where:
L = Length of ship, in m.

5.6.3 The section modulus of bottom longitudinal frames is not to be less than that obtained from the following formula:

$$\frac{100CK}{24 - 15.5f_B K}(d + 0.026L')Sl^2 \quad cm^3$$

Where:
f_B = Ratio of the required hull girder section modulus as calculated in Chapter 3 of this Part when mild steel is used to the actual hull girder section modulus at bottom.
L' = Length (m) of the ship, not to be taken larger than 230 m.
l = Spacing (m) of the solid floors
S = Spacing (m) of the longitudinals
C = Coefficient given below:
Case 1: 1.0, when no strut provided midway between floors;
Case 2: When a strut provided midway between floors as specified in 5.5.4 of this Chapter:
0.625, for Lower part of deep tank, or
0.5, for elsewhere.
K = Material factor as specified in 1.5.2(a) of this Part.

5.6.4 The section modulus of inner bottom longitudinal frames may be 75% of that of bottom longitudinal frames but not less than the value obtained from the following formula:

$$\frac{100C'KShl^2}{24 - 12f_B K} \quad cm^3$$

Where:
f_B, l, and S = As specified in 5.6.3 of this Chapter.
h = Vertical distance (m) from the top of the inner bottom plating to the lowest deck at centreline. However, when the cargo is carrier exceeding the lowest deck, h is to be taken from the top of the inner bottom plating to the deck just above the top of the cargo at centreline.
C' = Case 1: 0.9, when no strut provided midway between floors;
Case 2: 0.54, when a strut provided midway between floors as specified in 5.5.4 of this Chapter.
K = Material factor as specified in 1.5.2(a) of this Part.

5.6.5 Bottom and inner bottom longitudinals are to be continuous or attached at their ends in such a manner as to develop effectively the sectional area and the resistance to bending.

5.6.6 Where vertical struts are fitted between bottom and inner bottom longitudinal frames midway between the floor plates, the sectional area of the struts is not to be less than that obtained in 5.5.4(a) of this Chapter.

5.6.7 Vertical stiffeners are to be fitted on floor plates at each longitudinal for which the thickness is to be at least that of the solid floors and the depth greater than 0.08 d_0 where d_0 is the depth of the floor at the point under consideration.

5.6.8 Vertical or horizontal stiffeners are to be arranged on side girders between floors which are fitted two or more frame spaces apart. The stiffeners are to have a depth not less than 100 mm and a thickness equal to the side girder thickness.

5.6.9 Flanged transverse brackets of the following scantling are to be fitted from margin brackets at every frame between solid floors.

(a) The thickness is not to be less than that required for side girder plates in engine room.

(b) The breadth is to be extended to the adjacent longitudinal.

5.6.10 Where some portion of the double bottom of the ship is built according to the transverse framing system, arrangement is to be made to insure the continuity of longitudinal strength at the point of the connection of both systems.

5.6.11 Where the double bottom is framed longitudinally, transverse brackets are to be provided at every hold frame extending from the margin plate to the adjacent bottom and inner bottom longitudinals and to be connected with margin plates, shell plating and longitudinals. The thickness of the bracket is no to be less than that required in 5.2.4(a) of this Chapter.

5.7 Inner Bottoms, Margin and Bottom Plates

5.7.1 Thickness of inner bottom plating

(a) The inner bottom plating in holds is to be of the thickness obtained from the following formula (i) and (ii) whichever is greater.

(i) $t = \frac{C_H K}{1000} \times \frac{B^2 d}{d_0} + 2.5 \quad \text{mm}$

Where:

d_0 = Depth (m) of the center girder

K = Material factor as specified in 1.5.2(a) of this Part.

C_H = Coefficient set to:

b_0 for $B/l_H < 0.8$

b_0 or $\alpha.b_1$ whichever is greater for $0.8 \leq B/l_H < 1.2$

$\alpha.b_1$ for $B/l_H \geq 1.2$

with:

$$\alpha = \frac{13.8}{24 - 11 f_B K}$$

where:

K: Material factor as specified in 1.5.2(a) of this Part.

f_B = Ratio of the required hull girder section modulus as calculated in Chapter 3 of this Part when mild steel is used to the actual hull girder section modulus at bottom.

b_0 & b_1 = Coefficients specified in Table II 5-4 of this Chapter depending on B/l_H. However for transverse framing b_1 is to be 1.1 times the value in this table.

Table II 5-4
Values of b_0 and b_1

B/l_H	over		0.4	0.6	0.8	1.0	1.2	1.4	1.6
	less than	0.4	0.6	0.8	1.0	1.2	1.4	1.6	
b_0		4.4	3.9	3.3	2.2	1.6	-	-	-
b_1		-	-	-	2.2	2.1	1.9	1.7	1.4

(ii) $t = C'S\sqrt{Kh} + 2.5$ mm

Where:

C' = Coefficient obtained by the following formula:

$0.43\frac{l}{S} + 2.5$ for $\frac{l}{S} < 3.5$

4.0 for $\frac{l}{S} \geq 3.5$

l = Distance (m) between floors for longitudinal framing or between girders for transverse framing

S = Spacing (m) of inner bottom longitudinals for bottom longitudinal framing or frame spacing for transverse framing

K = Material factor as specified in 1.5.2(a) of this Part.

h = Height (m) as specified in 5.6.4

(b) The thickness of the inner bottom plating in the engine and the boiler spaces is not to be less than that obtained from 5.7.1(a) above plus 2.0 mm or than that obtained from the requirements of 16.2.2 of this Part plus 2.0 mm in the case where the inner bottom in engine and the boiler spaces is also a tank top, whichever is greater.

5.7.2 Under the boiler there is to be a clear space of at least 460 mm above the inner bottom. If the clear space is necessarily smaller, the thickness of the plating is to be suitably further increased.

5.7.3 Where the double bottom is used for carrying fuel oil for ship's used and no ceiling is fitted, the thickness of the inner bottom plating is not to be less than 10 mm in association with 760 mm frame spacing. Where the frame spacing differs from 760 mm, the thickness of the inner bottom plating is to be modified in direct proportion.

5.7.4 Where engine foundation plates or the thrust seat rest directly on the inner bottom plating, the thickness of the plating is to be increased in proportion to the kind, size and power of the engine and to be at least twice the thickness as given in 5.7.1(b) of this Chapter.

5.7.5 Where margin plates are approximately vertical, these plates fitted amidships are to extend for the full depth of the double bottom with a thickness as obtained from 5.7.1(a)(i) of this Chapter plus 1.5 mm. Where approximately horizontal, they may be of the thickness of the adjacent tank top plating.

5.7.6 The thickness of the margin plate is to be in no case less than that of the remainder of the plating in the corresponding location.

5.7.7 Where the inner bottom or the double bottom structure forms part of a sea chest, the thickness of the plating is not to be less than that of the shell plating in the same location, but need not exceed 25 mm.

5.7.8 The thickness of the bottom shell plating of cargo hold in way of double bottom is not to be less than that obtained from Chapter 7 of this Part, or than that from 5.7.1(a)(i) of this Chapter with C_H obtained using α from the following formula:

$$\alpha = \frac{13.8}{24 - 15.5 f_B K}$$

where:
α, f_B, K = See5.7.1(a)(i) above.

5.8 Manholes, Lightening Holes, Air and Drainage Holes

5.8.1 Manholes

(a) A sufficient number of manholes are to be cut in the inner bottom plating, floors and side girders to provide the access to all parts of the double bottom.

(b) Care is to be taken in locating manholes to avoid the possibility of interconnection of the main subdivision compartment through the double bottom in so far as practicable.

(c) Manholes in the inner bottom plating are to have a good shift with each other in the longitudinal direction and to be minimum in number.

(d) Manholes in the inner bottom plating are to be fitted with doubling plates or rims to take fastenings of covers.

(e) Manholes in the inner bottom plating are to be fitted with steel or wrought iron covers.

(f) Where no ceiling is fitted in the cargo hold, manhole covers are to be effectively protected against damage by the cargo.

(g) Manholes are to be cut clean and without jagged edge and to a well rounded design.

(h) The position and the size of manholes cut in the center girder is to be submitted for approval by the Society.

5.8.2 Lightening holes

(a) Lightening holes are to be cut in nontight floors, side girders and brackets.

(b) The diameter of lightening holes in brackets normally is not to be greater than 1/3 of the breadth of the bracket.

5.8.3 Neither manholes nor lightening holes are to be cut in the floor or the girder under the widely spaced pillar.

5.8.4 Air and drainage holes

(a) Air and drainage holes are to be cut in non-tight floor or girders to ensure the free escape of air and drain water.

(b) The air and the drainage holes are to be cut as closely to the inner and outer bottom plating as practicable.

Chapter 6

Frames

6.1 General

6.1.1 The requirement in this Chapter apply to ships having transverse strength and transverse stiffness provided by bulkheads that are not less effective than those specified in Chapter 14. Where the transverse strength and stiffness provided by bulkheads are less effective, additional stiffening is to be made by means of increasing scantling of frames, additional provision of web frames, etc.

6.1.2 The scantlings of frames in way of deep tanks are to comply with the provisions in Chapter 16 as well as those in this Chapter.

6.1.3 Frames are not to extend through the tops of water or oil tanks, unless the effective watertight or oiltight arrangements are specially submitted and approved.

6.1.4 Where large holes are cut in the web of frames, the scantlings of the frames are to be appropriately increased.

6.1.5 Thorough consideration is to be given to the concentration of stress and other forces acting on the lower end construction of frames.

6.1.6 Frames in boiler spaces and in way of bossing

(a) In boiler spaces, the scantlings of members such as frames, web frames, and side stringers are to be appropriately increased.

(b) The construction and scantlings of frames in way of bossing are to be at the discretion of the Society.

6.1.7 Where the angle between the web of frames or stringers and shell plating is extremely small, the scantlings of frames or stringers are to be suitably increased above the normal requirements and where necessary, appropriate supports are to be provided to prevent tripping.

6.1.8 The transverse frames, side longitudinals and web frames supporting side longitudinals that are fitted at the place where the bow flare is considered to endure large wave impact pressure are to be properly strengthened and particular attention is to be paid to the effectiveness of their end connections.

6.2 Frame Spacing

6.2.1 Transverse frame spacing

(a) The standard spacing of transverse frames is obtained from the following formula:

$$s = 2\,L + 450 \text{ mm}$$

(b) Transverse frame spacing in peaks or cruiser sterns is not to exceed 610 mm.

(c) Transverse frame spacing between 0.2L from the fore end and the collision bulkhead is not to exceed 700 mm or the standard spacing specified in (a), whichever is smaller.

(d) The requirements in (b) and (c) may be modified, where structural arrangements or scantlings are suitably considered.

6.2.2 The standard spacing of longitudinal frames is obtained from the following formula:

$s = 2L + 550$ mm

6.2.3 Where the spacing of frames exceeds the standard spacing stipulated in 6.2.1 and 6.2.2 by at least 250 mm, the scantlings and structural arrangement of double bottoms and other relevant structures are to be specially considered.

6.2.4 Maximum frame spacing is recommended not to exceed one metre.

6.3 Transverse Hold Frames

6.3.1 Application

(a) The transverse hold frame is the frame below the lowest deck from the collision bulkhead to the after peak bulkhead including the machinery space.

(b) The provisions in 6.3.2 to 6.3.4 apply to the transverse hold frames of ships of ordinary construction.

(c) The application of these provisions to transverse hold frames of ships which have bilge hopper tanks, or which have a special construction such as a double side shell, are to be at the discretion of the Society.

(d) Special considerations are to be given to the scantlings of transverse hold frames, where the specific gravity of cargoes in the loaded hold exceeds 0.9.

6.3.2 Scantlings of transverse hold frames

(a) The section modulus of transverse hold frames between 0.15L from the fore end and the after peak bulkhead is not to be less than that obtained from the following formula:

KC_0CShl^2 cm³

where:

K = Material factor as specified in 1.5.2(a) of this Part.

S = Frame spacing, in m.

l = Vertical distance, in m, from the top of the inner bottom plating at side to the top of the deck beams above the frames.
For frames abaft 0.25L from the fore end, l is to be measured at amidships. For frames between 0.25L and 0.15L from the fore end, l is to be measured at 0.25L from the fore end. For frames that are attached to the shell that has a remarkable flare, l is to be the length of the frame between supports.
Where the length of frames is markedly different from that measured above on account of discontinuity in the lowest deck or change in the height of the double bottom, lines extended from the lowest deck or the top of the double bottom parallel to the upper deck or keel respectively are to

be taken as the lowest deck or double bottom top and *l* is to be measured at the corresponding places of measurement. See Fig. II 6-1 and Fig. II 6-2 (a) and (b).

h = Vertical distance, in m, from the lower end of *l* at the place of measurement to a point d+0.038L' above the top of the keel. See Fig. II 6-2 (a) and (b).

L' = Length of ship, in m. However, where L exceeds 230 m, L' is to be taken as 230 m.

C_0 = Coefficient obtained from the following formula, but not to be less than 0.85.

$$1.25 - 2\frac{e}{l}$$

e = Height, in m, of the tank side bracket measured from the lower end of *l*.

C = C_1+C_2

(i) For ordinary framing systems without top side tanks,

$$C_1 = 2.1 - 1.2\frac{l}{h}$$

$$C_2 = 2.2k\alpha\frac{d}{h}$$

α = Coefficient given in Table II 6-1. For intermediate values of B/l_H, α is to be obtained by linear interpolation.

l_H = Length of hold, in m.

k = Coefficient given below according to the number of layers of deck:

= 13, for single deck systems

= 21, for double deck systems

= 50, for triple deck systems

Where B / *l* exceeds the following value according to the deck systems, the value of k is to be suitably increased:

= 2.8, for single deck systems

= 4.2, for double deck systems

= 5.0, for triple deck systems

(ii) For framing systems with top side tanks,

$$C_1 = 3.4 - 2.4\frac{l}{h}$$

$$C_2 = 2.7\alpha\frac{d}{h}$$

Where B/*l* exceeds 4.0, the value of C_2 is to be suitably increased.

Table II 6-1
Coefficient α

B / l_H	≤ 0.5	0.6	0.8	1.0	1.2	≥ 1.4
α	0.023	0.018	0.010	0.006	0.0034	0.002

(b) The section modulus of transverse hold frames between 0.15L from the fore end and the collision bulkhead is not to be less than that obtained from the following formula:

KC_0CShl^2 cm³

where:

K	=	Material factor as specified in (a) above
l	=	Vertical distance as specified in (a) above, except that it is to be measured at 0.15 L from the fore end.
S, h and C_0	=	As specified in (a) above.
C	=	Coefficient, 1.3 times the value specified in (a) above.

(c) For the frames under transverse web beams supporting deck longitudinals, the section modulus is to be obtained as in (a) and (b), but not to be taken as less than that obtained from the following formula:

$$2.4n\left[0.17+\frac{h_1}{9.81h}\left(\frac{l_1}{l}\right)^2 - 0.1\frac{l}{h}\right]KShl^2$$

where:

n	=	Ratio of transverse web beam spacing to frame spacing.
h_1	=	Deck load, in kN/m^2, stipulated in 9.2 for the deck beam at the top of frame.
l_1	=	Total length, in m, of the transverse web beam. See Fig. II 6-2 (a) of this Chapter.
K, S, l and h	=	As specified in (a) and (b) above.

(d) Where the ratio of the depth of the frame to the length measured from the deck at the top of the frame to the toe of the lower bracket is less than 1/24 for the frame prescribed in (a) and 1/22 for (b), the scantlings of such frames are to be suitably increased.

(e) Where the depth of the double bottom center girder is less than B/16, the scantlings of frames are to be suitably increased.

(f) Where long hatchways or multi-row hatchways are provided on the deck at the top of frames, special consideration is to be given to the scantlings of transverse hold frames and their upper end construction.

6.3.3 Transverse hold frames supported by web frames and side stringers

(a) Where transverse hold frames are supported by web frames and side stringers specified in Chapter 6A, the section modulus of frames is not to be less than that obtained from the following formula:

(i) For frames between 0.15L from the fore end and the after peak bulkhead:

$$2.1KCShl^2 \quad cm^3$$

(ii) For frames between 0.15L from the fore end and the collision bulkhead:

$$3.2KCShl^2 \quad cm^3$$

where:

K = Material factor as specified in 1.5.2(a) of this Part.

h = Vertical distance as specified in 6.3.2(a) of this Chapter.

l = Vertical distance as specified in 6.3.2(a) or (b) of this Chapter, as applicable.
Where this distance is less than 2 metres, *l* is to be one half of the distance plus 1.0 m. See Fig. II 6-1 and Fig II 6-2 (c) of this Chapter.

C = As obtained from the following formula, but to be taken as 1.0, where C is less than 1.0:

$$C = \left[\alpha_1\left(3 - \frac{l_2}{l}\right) - \alpha_2\frac{e}{l}\right]C_4$$

l_2 = Vertical distance, in m, at side from the lowest side stringer to the one immediately above or to the deck. See Fig. II 6-2 (c) of this Chapter.

e = Height, in m, of the lower bracket measured from the lower end of *l*. However, where this height, in m, exceeds 0.25*l*, e is to be taken as 0.25*l*. See Fig. II 6-2 (c) of this Chapter.

α_1, α_2 = As specified in Table II 6-2 of this Chapter.

C_4 = As obtained from the following formula, but to be taken as 1.0 where C_4 is less than 1.0, and as 2.2 where C_4 exceeds 2.2:

$$2\frac{H}{H_0} - 1.5$$

H_0 = Vertical distance, in m, from the top of the inner bottom plate at side to the lowest deck. See Fig. II 6-2 (c) of this Chapter.

H = Vertical distance, in m, from the lower end of H_0 to the freeboard deck at side. See Fig. II 6-2 (c) of this Chapter.

(b) The scantlings of frames specified in (a) are to be as deemed appropriate by the Society if the difference between any two adjacent unsupported spans of the frames (the vertical distance between adjacent stringers or from a stringer to the end of the frame) is not less than 25% or the difference between the largest and smallest unsupported spans is not less than 50%.

(c) Where the height of lower brackets of frames is less than 0.05 times *l* specified in (a), special considerations are to be given to the scantlings of transverse hold frames and their lower end constructions.

Table II 6-2
Values of α_1 and α_2

Numbers of side stringers installed below the lowest deck	α_1	α_2
1	0.75	2.0
2	0.90	1.8
≥ 3	1.25	1.3

6.3.4 Connection of transverse hold frames

(a) Transverse hold frames are to be overlapped with tank side brackets by at least 1.5 times the depth of frame sections and are to be effectively connected thereto.

(b) The upper ends of transverse hold frames are to be effectively connected by brackets with the deck and deck beams, and where the deck at the top of frames is longitudinally framed, the upper end brackets are to be extended and connected to the deck longitudinals adjacent to the frames.

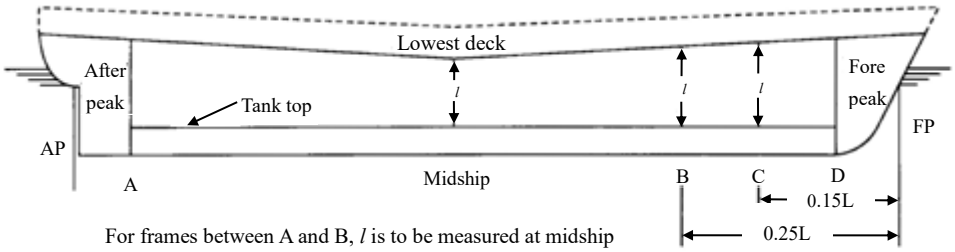

For frames between A and B, *l* is to be measured at midship
For frames between B and C, *l* is to be measured at B
For frames between C and D, *l* is to be measured at C

Fig. II 6-1
Measuring Point of *l* for Hold Frames

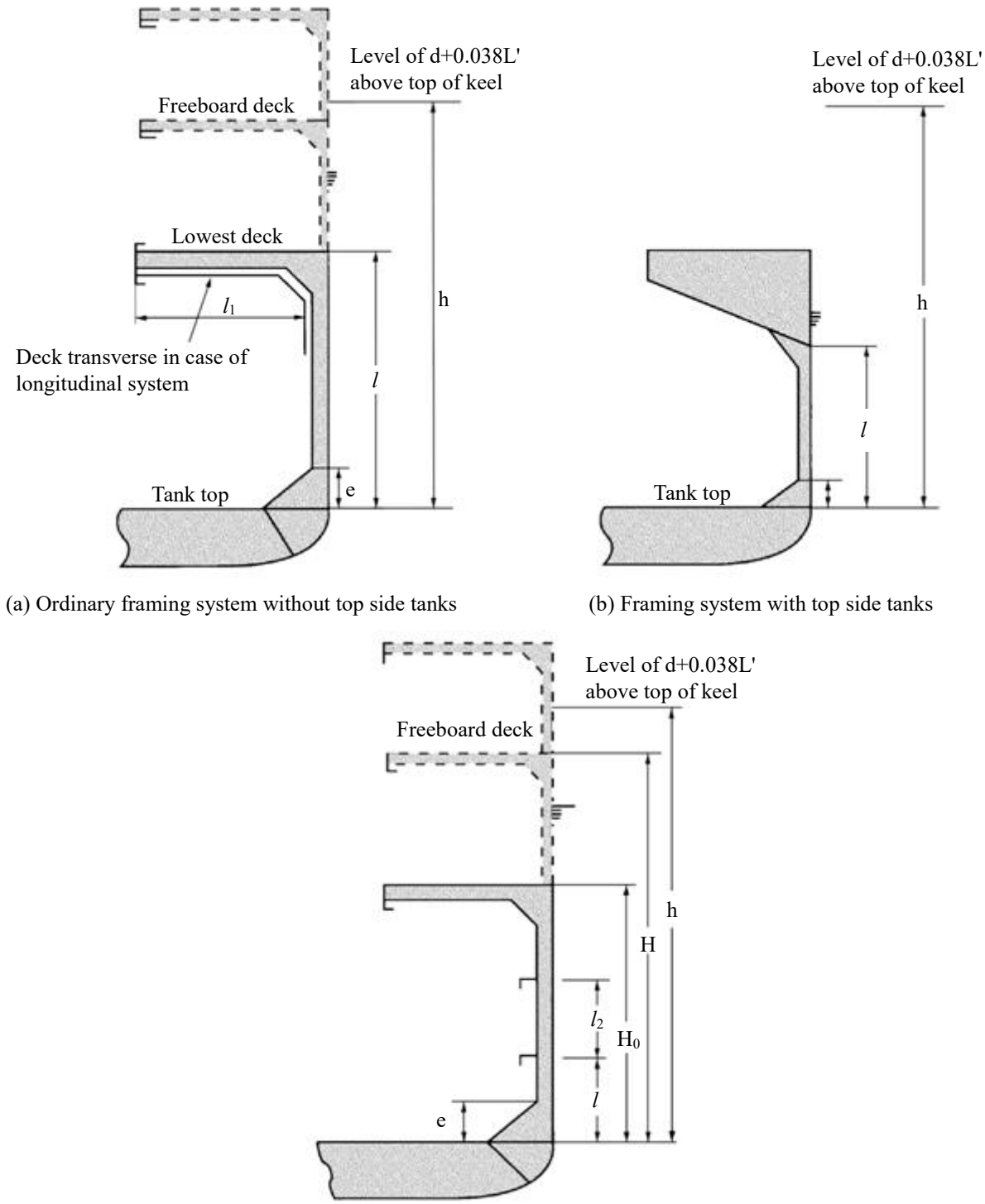

(a) Ordinary framing system without top side tanks

(b) Framing system with top side tanks

(c) Web and stringer system
Notes: e is not be more than 0.25*l*
Where *l* is less than 2.0 m, *l* is to be one half of the actual span plus 1.0 m.

Fig. II 6-2
Measurement of *l*, h, H, etc for Transverse Hold Frames

6.4 Side Longitudinals and Other Structural Members

6.4.1 Side longitudinals

(a) The section modulus of side longitudinals in the midship part below the freeboard deck is not to be less than that obtained from the following formula, whichever is greater:

$100KCShl^2$ cm^3

$2.9K\sqrt{L'}S\,l^2$ cm^3

where:

K = Material factor as specified in 1.5.2(a) of this Part.

S = Spacing, in m, of longitudinals.

l = Distance, in m, between the web frames or between the transverse bulkhead and the web frame including the length of connection.

h = Vertical distance, in m, from the side longitudinal concerned to a point d+0.038L' above the top of keel.

L' = Length of ship, in m. However, where L exceeds 230 m, L' is to be taken as 230 m.

C = Coefficient given by the following formula:

$$\frac{1}{24 - kK}$$

k = (i) or (ii) whichever is greater:

(i) $15.5\, f_B(1 - 2.5\frac{y}{D_s})$

(ii) $\frac{6}{a}$ for $L \leq 230$ m

$\frac{10.5}{a}$ for $L \geq 400$ m

Liner interpolation for intermediate L.

a = $\sqrt{K}$ if at least 80% of side shell is of high tensilte steel in the transverse section at amidships. 1.0 for otherwise.

y = Vertical distance, in m, from the top of keel to the longitudinal under consideration.

f_B = Ratio of the section modulus of the transverse section of hull required in 3.2.2 of this Part to the actual section modulus of the transverse section of hull at bottom. However, where f_B is less than 0.85/K, it is to be taken as 0.85/K.

(b) Beyond the midship part, the section modulus of side longitudinals may be gradually reduced towards the ends of the ship, and may be 0.85 times that obtained from the formula in (a) at the ends. However, the section modulus of side longitudinals between 0.15L from the fore end and the collision bulkhead is not to be less than that obtained from the formula in (a).

(c) The depth of flat bars used for longitudinals is not to exceed 15 times the thickness of flat bars.

(d) Side longitudinals on sheer strakes in the midship part are to be of a slenderness ratio not greater than 60, as far as is possible.

(e) The section modulus of bilge longitudinals need not exceed that of bottom longitudinals.

(f) Side longitudinals are to be continuous through transverse bulkheads or to be connected thereto by brackets, so as to provide adequate fixity and continuity of longitudinal strength.

6.4.2 The web frames supporting side longitudinals are to comply with the requirements in (a) to (c).

(a) Web frames are to be arranged at sections where solid floors are provided.

(b) The scantlings of web frames are not to be less than that obtained from the following formulae:

Depth: 0.1l, in m, or 2.5 times the depth of the slot for longitudinals, whichever is greater.

Section modulus: KC_1Shl^2 cm^3

Thickness of web: t_1 or t_2, whichever is greater:

$$t_1 = \frac{KC_2}{1000}\frac{Shl}{d_0} + 2.5 \quad \text{mm}$$

$$t_2 = 8.6 \times \sqrt[3]{\frac{{d_0}^2(t_1 - 2.5)}{kK}} + 2.5 \quad \text{mm}$$

where:

K	=	Material factor as specified in 1.5.2(a) of this Part.
S	=	Web frame spacing, in m.
l	=	Unsupported length, in m, of web frame.
d_0	=	Depth (m) of web frame. However, in the calculation of t_1, the depth of slots for side longitudinals, if any, is to be deducted from the web depth. Where the depth of webs is divided by vertical stiffeners, the divided depth may be taken as d_0 in the calculation of t_2.
h	=	Vertical distance, in m, from the lower end of l to a point d+0.038L' above the top of keel. However, where the distance is less than 1.43l ,in m, h is to be taken as 1.43l.
L'	=	As specified in 6.4.1(a) of this Chapter.
C_1, C_2	=	As specified in Table II 6-3 of this Chapter.
k	=	Coefficient given in Table II 6-4 of this Chapter according to the ratio of S_1 to d_0, where S_1 is the spacing (m) of stiffeners or tripping brackets provided on web plates. For the intermediate values of S_1/d_0, k is to be obtained by linear interpolation.

(c) Web frames are to be provided with tripping brackets at an interval of about three metres. Where the breadth of the face plates of web frames exceeds 180 mm on either side of the web, the tripping brackets are to support the face plates as well. Moreover, a stiffener is to be provided on the web at every longitudinal except for the middle part of the span of web frames where stiffeners may be provided at alternate longitudinals. Webs of longitudinals and web frames are to be connected to each other.

Table II 6-3
Coefficients C_1 and C_2

	For web frames abaft 0.15 L from the fore end	For web frames between 0.15 L from the fore end and the collision bulkhead
C_1	$6.6\left(1 - 0.4\frac{l}{h}\right)$	$8.6\left(1 - 0.4\frac{l}{h}\right)$
C_2	$35\left(1.43 - 0.43\frac{l}{h}\right)$	$45.5\left(1.43 - 0.43\frac{l}{h}\right)$

Table II 6-4
Coefficients k

S_1/d_0	≤ 0.3	0.4	0.5	0.6	0.7	0.8	0.9	1.0	1.5	≥2.0
k	60.0	40.0	26.8	20.0	16.4	14.4	13.0	12.3	11.1	10.2

6.5 Cantilever Beam Systems

6.5.1 Cantilever beams

(a) The depth of cantilever beams measured at the toe of end brackets is not to be less than one-fifth of the horizontal distance from the inboard end of the cantilever beam to the toe of the end bracket.

(b) The depth of cantilever beams may be gradually tapered from the toe of end brackets towards the inboard end where it may be reduced to about a half of the depth at the toe of the end bracket.

(c) The section modulus of cantilever beams at the toe of end brackets is not to be less than that obtained from the following formula: (see Fig. II 6-3)

$$7.1Sl_0\left(\frac{1}{2}b_1h_1 + b_2h_2\right) \qquad \text{cm}^3$$

where:

S = Cantilever beam spacing, in m.

l_0 = Horizontal distance, in m, from the inboard end of cantilever beams to the toe of end brackets.

b_1 = Horizontal distance, in m, from the inboard end of cantilever beams to the toe of end brackets of beam or transverse deck girder at side. However, where the deck is framed longitudinally and no deck transverse is provided between the cantilever beams, b_1 is to be taken as l_0.

b_2 = A half of the breadth, in m, of the hatch opening in the deck supported by the cantilever beams.

h_1 = 9.81h

Deck load, in kN/m^2, stipulated in 9.2 for the deck transverses supported by the cantilever beams.

h_2 = Load, in kN/m^2, on hatch covers of the deck supported by the cantilever beams which is not to be less than obtained from the following (i) to (iii), depending on the type of deck.

(i) For weather decks, h_2=9.81h, which is the deck load stipulated in 9.2.1 for the deck transverses or the maximum design cargo weight on hatches per unit area (kN/m^2), whichever is greater. h_2 is not to be less than 17.5 kN/m^2 for hatches at Position 1 and 12.8 kN/m^2 for those at Position 2 specified in 17.1.2, respectively.

(ii) For decks other than the weather deck where ordinary cargoes or stores are intended to be carried, h_2 is the design deck load.

(iii) For decks other than those specified in (i) or (ii) above, h_2 is the value equal to h_1.

(d) The sectional area of face plates of cantilever beams may be gradually tapered from the inner edge of end brackets towards the inboard end of cantilever beams, where it may be reduced to 0.60 times that at the inner edge of the end brackets.

(e) The web thickness of cantilever beams at any point is not to be less than the greater of the values obtained from the following formula:

$$t_1 = \frac{0.0095S\left(\frac{1}{2}b_1h_1 + b_2h_2\right)}{d_c} + 2.5 \qquad \text{mm}$$

$$t_2 = 5.8 \times \sqrt[3]{d_c^2(t_1 - 2.5)} + 2.5 \qquad \text{mm}$$

where:

S, b_1, b_2, h_1 and h_2 = As specified in (c).
However, where the deck is framed longitudinally and no deck transverse is

provided between the cantilever beams, $b_1/2$ is to be substituted by the horizontal distance in metres from the inboard end of cantilever beams to the section under consideration in the formula for t_1.

d_c = Depth, in m, of the cantilever beam at the section under consideration.

However, in the calculation of t_1, the depth of slots for deck longitudinals, if any, is to be deducted from the depth of cantilever beams. Where the webs are provided with horizontal stiffeners, the divided web depth may be used for d_c in the formula for t_2.

(f) Cantilever beams are to be provided with tripping brackets at an interval of about three metres. Where the breadth of the face plates of cantilever beams exceeds 180 mm on either side of the web, the tripping brackets are to support the face plates as well. Moreover, a stiffener is to be provided on the web at every longitudinal except for the middle part of the span of cantilever beams where stiffeners may be provided at alternate longitudinals.

(g) Web plates adjacent to the inner edge of end brackets are to be specially reinforced.

(h) Cantilever beams supporting hatch covers on lower decks are to comply with the requirements in (i) and (ii):

(i) The leg length of the fillet welds between webs and hatch side girders is to be Type 1 specified in Table XII 5-3, Part XII of the Rules.

(ii) Where the stiffeners are provided to prevent web plates from buckling, consideration is to be given to the arrangement of the ends of such stiffeners to ensure that there are no stress concentrations at the connections betweeen web plates and the members supporting hatch covers on lower decks.

6.5.2 Web frames

(a) The depth of web frames is not to be less than one-eighth of the length including the length of connections at both ends.

(b) The section modulus of web frames is not to be less than that obtained from the following formula. However, where a tween deck web frame in association with a cantilever beam supporting the deck above is provided at the top of the web frame, the value of the formula may be reduced to 60%.

$$7.1Sl_1\left(\frac{1}{2}b_1h_1 + b_2h_2\right) \qquad \text{cm}^3$$

where:

S = Web frame spacing, in m.

l_1 = Horizontal distance, in m, from the end of supported cantilever beams to the inside of web frames

b_1, b_2, h_1 and h_2 = As specified in 6.5.1(c) for the supported cantilever beams. However, where the deck is framed longitudinally and no deck transverse is provided between the cantilever beams, l_1 is to be substituted for b_1.

(c) The section modulus of tween deck web frames is to be in accordance with the requirements in (b), and is not to be less than that obtained from the following formula:

$$7.1C_1Sl_1\left(\frac{1}{2}b_1h_1 + b_2h_2\right) \qquad \text{cm}^3$$

where:

S, l_1, b_1, b_2, h_1 and h_2	=	As specified in (b).
C_1	=	$0.15 + 0.5\left(\dfrac{\frac{1}{2}b_1'h_1' + b_2'h_2'}{\frac{1}{2}b_1h_1 + b_2h_2}\right)$
b_1', b_2', h_1' and h_2'	=	b_1, b_2, h_1 and h_2 respectively stipulated in (b) in respect to the cantilever beams provided below the web frames concerned.

(d) The web thickness is not to be less than that obtained from the following formula, whichever is greater:

$$t_1 = 0.0095\frac{C_2S\left(\frac{1}{2}b_1h_1 + b_2h_2\right)}{d_w}\frac{l_1}{l} + 2.5 \qquad \text{mm}$$

$$t_2 = 5.8 \times \sqrt[3]{d_w^2(t_1 - 2.5)} + 2.5 \qquad \text{mm}$$

where:

S, b_1, b_2, h_1, h_2, and l_1	=	As specified in (b).
d_w	=	The smallest depth, in m, of web frame. However, in the calculation of t_1, the depth of slots for side longitudinals, if any, is to be deducted from the web depth. Where the depth of webs is divided by vertical stiffeners, the divided depth may be used for d_w in the calculation of t_2.
l	=	Length, in m, of web frame including the length of connections at both ends.
C_2	=	Coefficient given below: For hold web frames: Where a web frame in association with a cantilever beam supporting the deck above is provided directly above: 0.9 Elsewhere: 1.5 For tween deck web frames: C_1+0.6 C_1= Coefficient given by (c)

(e) Where web frames supporting cantilever beams also support side longitudinals or side stringers, the scantlings are to comply with the following requirements in addition to those in 6.4.2.

(i) The section modulus is not to be less than that obtained from the formula in (b), multiplied by the following coefficient:

Where tween deck web frame together with cantilever beam is provided above:

$$0.6 + 9.81\frac{0.05hl^2 + 0.09h_ul_u^2}{1.4\left(\frac{1}{2}b_1h_1 + b_2h_2\right)l_1}$$

Elsewhere: 1.0

where:

l	=	Length, in m, of hold web frame including the length of connections at both ends.
l_u	=	Length, in m, of tween deck web frame provided directly above, including the length of connections at both ends.
h	=	Vertical distance, in m, from the middle of l to a point d+0.038L' above the top of keel.
L'	=	Length of ship, in m. However, where L exceeds 230 m, L' is to be taken as 230 m.
h_u	=	Vertical distance, in m, from the middle of l_u to a point to which h is measured. However, where the point is below the middle of l_u , h_u is to be taken as zero.
b_1, b_2, h_1, h_2, and l_1	=	As specified in (b).

(ii) The web thickness is not to be less than that given by (d), in which the value of t_1 is to be increased by the amount obtained from the following formula:

$$0.0255\frac{\mathrm{Sh}l}{\mathrm{d_w}} \qquad \text{mm}$$

S	=	Web frame spacing, in m.
h, l	=	As specified in (i).
d_w	=	As specified in (d)

(f) Web frames are to be provided with tripping brackets at an interval of about three metres. Where the breadth of the face plates of web frames exceeds 180 mm on either side of the web, the tripping brackets are to support the face plates as well. Moreover, a stiffener is to be provided on the webs at every side longitudinal except for the middle part of the span of web frames where stiffeners may be provided at alternate longitudinals. Webs of longitudinals and web frames are to be connected to each other.

(g) Web frames are to be effectively connected with other web frames located beneath or solid floors so as to maintain strength continuity.

6.5.3 Cantilever beams and web frames supporting them are to be effectively connected by brackets required in (a) to (d):

(a) The radius of curvature of the free edges of brackets is not to be less than the depth of cantilever beams at the toes of brackets.

(b) The thickness of brackets is not to be less than that of the webs of cantilever beams or web frames, whichever is greater.

(c) The brackets are to be properly strengthened by stiffeners.

(d) The free edges of brackets are to have face plates of a sectional area not less than that of cantilever beams or web frames, whichever is greater, and the face plates are to be connected with those of cantilever beams and web frames.

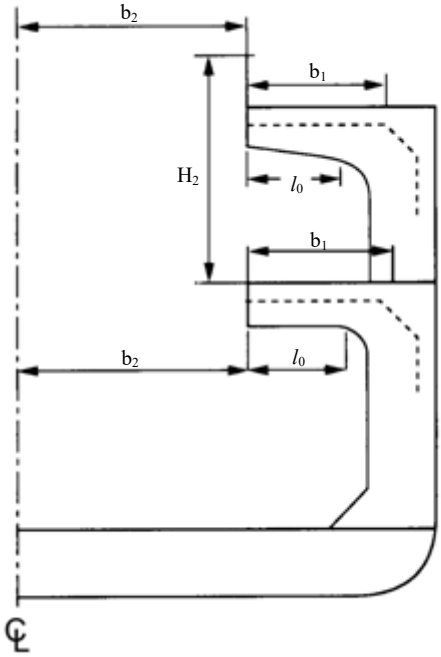

The loading height of cargo (H_2) is to be taken into consideration when h_2 of the lower deck is assumed.

Fig. II 6-3
Measurement of l_0, b_1, b_2 and H_2

6.6 Tween Deck Frames

6.6.1 General

(a) The scantlings of tween deck frames are to be determined in relation to the strength of hold frames, the arrangement and transverse stiffness of bulkheads, etc.

(b) Tween deck frames are, in association with the hold frames, to be determined in consideration of maintaining the continuity of strength of framing from the bottom to the uppermost deck.

(c) The scantlings of tween deck beams specified in 6.6 are based on the standard structural arrangement so as to maintain transverse stiffness of ships by means of efficient tween deck bulkheads provided above the hold bulkheads or by web frames extended to the top of superstructures at proper intervals.

6.6.2 Scantlings of tween deck frames

(a) The section modulus of tween deck frames below the freeboard deck is not to be less than that obtained from the following formula:

$6KShl^2$ cm^3

where:

K = Material factor as specified in 1.5.2(a) of this Part.
S = Frame spacing, in m.
l = Tween deck height, in m.
h = Vertical distance, in m, from the middle of l to the point d+0.038L' above the top of keel.

However, where h is less than 0.03L, h is to be taken as 0.03L.

L' = Length of ship, in m. However, where L exceeds 230 m, L' is to be taken as 230 m.

(b) The section modulus of tween deck frames except those specified in (a) is not to be less than that obtained from the following formula:

$KCSlL$ cm^3

where:

K = Material factor as specified in 1.5.2(a) of this Part.

S and l = As specified in (a).

C = Coefficient given in Table II 6-5 of this Chapter.

L = Length of ship, in m, as specified in 1.2.1 of this part.

(c) The scantlings of tween deck frames below the freeboard deck within 0.15L from the fore end and within 0.125L from the after end are to be appropriately increased above those given by (a) and (b).

(d) Where decks are supported by longitudinal beams and web beams, the section modulus of tween deck frames supporting web beams is not to be less than that obtained from the following formula, in addition to those in (a) and (c).

$$2.4(1 + 0.0714n\frac{h_1}{h})\,KShl^2 \qquad cm^3$$

where:

K = Material factor as specified in 1.5.2(a) of this Part.

S, h and l = As specified in (a).

n = Ratio of spacing of web beams to tween deck frame spacing.

h_1 = Deck load, in kN/m^2, stipulated in 9.2 of this Part for the deck beam at the top of frame.

Table II 6-5
Coefficients C

Description of tween deck frames	C
Superstructure frames (excluding the following two items)	0.44
Superstructure frames for 0.125L from aft end	0.57
Superstructure frames for 0.125L from fore end and cant frames at stern	0.74

6.6.3 Special precautions regarding tween deck frames

(a) Care is to be taken so that the strength and stiffness of framing at the ends of the ship may be increased in proportion to the actual unsupported length of frame as well as the vertical height of tween decks.

(b) In ships having an especially large freeboard, the scantlings of tween deck frames may be properly reduced.

6.6.4 Superstructure frames

(a) Superstructure frames are to be provided at every frame located below.

(b) Notwithstanding the requirements in 6.6.2(b), superstructure frames for four frame spaces at the ends of bridges and of detached superstructures within 0.5L amidships are to be of the section modulus obtained from the formula in 6.6.2 using 0.74 as the coefficient C.

(c) Web frames or partial bulkheads are to be provided above the bulkheads required by Chapter 15 or at other positions such as may be considered necessary to give effective transverse rigidity to the superstructures.

6.6.5 The section modulus of frames of cruiser sterns is not to be less than 0.86 times that required by 6.8.1.

6.7 Frames Below Freeboard Deck Forward of Collision Bulkhead

6.7.1 The section modulus of transverse frames below the freeboard deck is not to be less than that obtained from the following formula:

$8KSh\ell^2$ cm^3

where:

K = Material factor as specified in 1.5.2(a) of this Part.
S = Frame spacing, in m.
ℓ = Unsupported length of frame, in m, but not to be less than 2.15 metres.
h = Vertical distance, in m, from the middle of ℓ to a point 0.12L above the top of keel.
However, where h is less than 0.06L, h is to be taken as 0.06L.

6.7.2 Longitudinals below the freeboard deck are to comply with the requirements in (a) and (b):

(a) The section modulus of longitudinals is not to be less than that obtained from the following formula. However, the modulus obtained from the formula is to be increased by 25% (between 0.05D and 0.15D from the top of the keel), and 50% (below 0.05D from the top of the keel).

$8KSh\ell^2$ cm^3

where:

K = Material factor as specified in 1.5.2(a) of this Part.
S = Longitudinal frame spacing, in m.
ℓ = Distance, in m, between the side transverse or between the side transverse and the transverse bulkhead. However, where ℓ is less than 2.15 metres, ℓ is to be taken as 2.15 metres.
h = Vertical distance, in m, from the longitudinals to a point 0.12L above the top of keel.
However, where h is less than 0.06L, h is to be taken as 0.06L.

(b) Longitudinals are to be connected at each end to breast hooks and transverse bulkheads by efficient brackets.

6.8 Frames Below Freeboard Deck Abaft of After Peak Bulkhead

6.8.1 Transverse frames below freeboard deck

(a) The section modulus of transverse frames below the freeboard deck is not to be less than that obtained from the following formula:

$8Shl^2$ cm^3

where:

S = Frame spacing, in m.

l = Unsupported length of frame, in m.
However, where the length is less than 2.15 metres, *l* is to be taken as 2.15 metres.

h = Vertical distance, in m, from the middle of *l* to a point d+0.038L' above the top of keel.
However, where the distance is less than that 0.04L, h is to be taken as 0.04L.

L' = Length of ship, in m. However, where L exceeds 230 m, L' is to be taken as 230 m.

(b) Where the ship speed exceeds 14 knots, the section modulus of side frames is to be increased over the value required by (a) by 2% per knot excess to a maximum of 12%.

Chapter 6A

Web Frames and Side Stringer

6A.1 General

6A.1.1 The requirements in this Chapter apply to side stringers supporting the transverse hold frames specified in 6.3.3 and the web frames supporting these side stringers.

6A.1.2 Web frames and side stringers are to be arranged to provide effective stiffness to the ship side structures.

6A.1.3 The strength of web frames and side stringers in way of deep tanks is not to be less than that required for vertical or horizontal girders on deep tank bulkheads.

6A.1.4 The side stringers supporting transverse hold frames that are fitted where the bow flare is considered to endure large wave impact pressure, and the web frames supporting these side stringers are to be properly strengthened and particular attention is to be paid to the effectiveness of their end connections.

6A.2 Web Frames

6A.2.1 Scantlings of web frames

(a) The scantlings of web frames supporting side stringers are not to be less than that obtained from the following formula:

Depth = $0.125l$, in m

Section modulus = KC_1Shl^2, in cm^3

Thickness of web = t_1 or t_2, in mm, whichever is greater:

$$t_1 = \frac{KC_2}{1000}\frac{Shl}{d_0} + 2.5 \quad \text{mm}$$

$$t_2 = 8.6\times\sqrt[3]{\frac{d_0^2(t_1-2.5)}{kK}} + 2.5 \quad \text{mm}$$

where:

K	=	Material factor as specified in 1.5.2(a) of this Part.
S	=	Web frame spacing, in m.
l	=	Unsupported length, in m, of web frame.
d_0	=	Depth, in m, of web frame. Where the webs are provided with vertical stiffeners, the divided web depth may be used for d_0 in the formula of t_2.
h	=	Vertical distance, in m, from the lower end of l to a point d+0.038L' above the top of keel.
L'	=	Length of ship, in m. Where, however, L exceeds 230m, L' is to be taken as 230m.
C_1 and C_2	=	As specified in Table II 6A-1 of this Chapter.
k	=	Coefficient given in Table II 6A-2 according to the ratio of S_1 to d_0, where S_1 is the spacing (m) of stiffeners or tripping brackets provided on web plates of web frames. For the intermediate values of S_1/d_0, k is to be obtained by linear interpolation.

(b) Where the web frames are in close proximity to boilers, the thickness of webs and face plates is to be suitably increased.

Table II 6A-1
Coefficients C1 and C2

	For web frames abaft 0.15 L from the fore end	For web frames between 0.15 L from the fore end and the collision bulkhead
C_1	3.0	3.8
C_2	23	28

Table II 6A-2
Coefficients k

S_1/d_0	≤ 0.3	0.4	0.5	0.6	0.7	0.8	0.9	1.0	1.5	≥ 2.0
k	60.0	40.0	26.8	20.0	16.4	14.4	13.0	12.3	11.1	10.2

6A.2.2 Stiffening of webs

(a) Stiffeners or tripping brackets are to be provided on webs of web frames as may be required.

(b) Tripping brackets are to be arranged at intervals of about 3 metres.

(c) Where the breadth of face plates on either side of the web exceeds 180 mm, tripping brackets are to be arranged to support the face plates.

6A.2.3 Below the bulkhead deck, tween deck web frames are to be provided over the hold web frames as may be required, to provide continuity of transverse strength of the web frames in holds and machinery spaces.

6A.2.4 Beams at the top of web frames are to be suitably increased in both strength and stiffness.

6A.3 Hold Side Stringers

6A.3.1 Scantlings of hold side stringers

(a) The scantlings of side stringers are not to be less than that obtained from the following formula:

Depth = $0.125l$ m

plus one quarter of the depth (m) of slot for ordinary frames.

Section modulus = KC_1Shl^2 cm^3

Thickness of web = t_1 or t_2, whichever is greater: mm

$$t_1 = \frac{KC_2}{1000}\frac{Shl}{d_0} + 2.5 \quad \text{mm}$$

$$t_2 = 8.6 \times \sqrt[3]{\frac{d_0^2(t_1-2.5)}{kK}} + 2.5 \quad \text{mm}$$

where:

K = Material factor as specified in 1.5.2(a) of this Part.

S = Distance, in m, between the mid-points of the spaces from the side stringer concerned to the adjacent side stringers or to the top of the inner bottom plating at side or to the top of deck beams at side.

l = Web frame spacing, in m.

d_0	=	Depth of side stringer, in m. However, where the depth of the web is divided by providing a stiffener in parallel to the face plate, the divided depth may be taken as d_0 in the calculation of t_1.
h	=	Vertical distance, in m, from the middle of S to a point d+0.038L' above the top of keel. However, where h is less than that 0.05L (m), h is to be taken as 0.05L.
L'	=	Length of ship, in m. Where, however, L exceeds 230m, L' is to be taken as 230m.
C_1 and C_2	=	As specified in Table II 6A-3 of this Chapter.
k	=	Coefficient given in Table II 6A-2 of this Chapter according to the ratio of S_1 to d_0, where S_1 is the spacing (m) of stiffeners or tripping brackets provided on web plates of side stringers. For the intermediate values of S_1/d_0, k is to be obtained by linear interpolation.

Table II 6A-3
Coefficients C_1 and C_2

	For side stringers abaft 0.15L from the fore end	For side stringers between 0.15L from the fore end and the collision bulkhead
C_1	5.1	6.4
C_2	42	52

(b) In boiler spaces, the thickness of various parts of the stringer plate such as web plates and face plates are to be suitably increased.

6A.3.2 Stiffeners on webs

Stiffeners that cover the entire width of the web are to be provided on the webs of side stringers at alternate frames.

6A.3.3 Tripping brackets

(a) Tripping brackets are to be provided on side stringers at intervals of about 3 metres.

(b) Where the breadth of face plates on either side of the side stringer exceeds 180 mm, tripping brackets are to be arranged to support the face plates.

6A.3.4 Connection of side stringers to web frames

(a) Connection of side stringers to web frames is to extend for the full depth of the web frame.

(b) Where stringers are of the same depth as web frames, efficient gussets are to be used to connect the face plates of the side stringers with the face plates of the web frames.

6A.3.5 Connection of side stringers to transverse bulkhead

Brackets of a proper size are to be used to effectively connect side stringers to the transverse bulkheads.

Chapter 7
Shell Plating

7.1 General

7.1.1 Throughout this Chapter, the terms "Garboard Strake", "Sheer Strake", "Bottom Plating", "Side Plating", "Bottom Plating Forward", "End Plating" and "Superstructure Side Plating", are of the meanings as follows:

(a) The garboard strake is the first strake of plating next to a bar keel.

(b) The sheer strake is the strake of plating running alongside the strength deck.

(c) The bottom plating is the plating extending across the bottom of the ship from the keel to the upper turn of the bilge for 0.4L amidships, excluding the keel and the garboard strake.

(d) The side plating is the plating extending from the upper turn of the bilge up to the sheer strake for 0.4L amidships.

(e) The bottom plating forward is the plating on the flat of the bottom forward for 0.2L from the fore end (0.25L with machinery aft).

(f) The end plating is the shell plating for 0.1L from both ends.

(g) The superstructure side plating is the vertical plating extending from the freeboard deck to the superstructure deck.

7.1.2 The thickness of the shell plating is neither to be less than that required for purpose of longitudinal strength in accordance with Chapter 3 of this Part, nor that required by this Chapter.

7.1.3 The thickness of shell plating at such parts that the corrosion is considered excessive due to the location and/or the service condition of the ship is to be properly increased over that required in this Chapter.

7.1.4 With regard to the prevention of buckling of the shell, adequate consideration is to be given to the prevention of buckling due to compression in addition to complying with the requirements in 3.4 of this Chapter.

7.1.5 Sufficient consideration is to be made regarding the continuity in the thickness of shell plating and to the avoidance of remarkable differences between the thickness of the shell plating under consideration and that of the adjacent shell plating.

7.1.6 Where the shell plating is prone to denting due to contact with the wharf, special consideration is to be given to the thickness of the shell plating.

7.1.7 The requirements in this Chapter for side plating may be appropriately modified when the distance from the designed maximum load line to the strength deck is very large.

7.1.8 Moving parts penetrating the shell plating below the summer load draught, are to be fitted with a watertight sealing arrangement acceptable to the Society. The inboard gland is to be located within a watertight space of such

volume that, if flooded, the bulkhead deck is not to be submerged. The Society may require that if such a compartment is flooded, essential or emergency power and lighting, internal communication, signals or other emergency devices remain available in other parts of the ship.

7.2 Plate Keels

7.2.1 The breadth of the plate keel over the whole length of the ship is not to be less than that obtained from the following formula:

$2L + 1000$ mm

7.2.2 The thickness of the plate keel over the whole length of the ship is not to be less than the thickness of the bottom shell for the midship part obtained from the requirements in 7.3.4 of this Chapter plus 2.0 mm. However, this thickness is not to be less than that of the adjacent bottom shell plating.

7.3 Shell Plating below the Strength Deck

7.3.1 The minimum thickness of shell plating below the strength deck is not to be less than that obtained from the following formula:

$\sqrt{KL}$ mm

Where:

K = Material factor as specified in 1.5.2(a) of this Part.

L = Length of ship, in m, as specified in 1.2.1 of this Part.

7.3.2 The thickness of side shell plating other than the sheer strake of the strength deck of the midship part is to be as required in the following (a) and (b) in addition to the requirements in 3.3.1 and 3.3.2 of this Part.

(a) In ships with transverse framing, the thickness of side shell plating is not to be less than that obtained from the following formula:

$C_1 C_2 S\sqrt{d\text{-}0.125D+0.05L'+h_1} + 2.5$ mm

Where:

S = Spacing of transverse frames m

L′ = Length of ship m
However, where L exceeds 230 m, L′ is to be taken as 230 m.

C_1 = Coefficient given below:
Where L is 230 metres and under: 1.0
Where L is 400 metres and over: 1.07
For intermediate values of L, C_1 is to be obtained by linear interpolation.

C_2 = Coefficient given below:

$$91\sqrt{\frac{K}{576 - \alpha^2 K^2 x^2}}$$

where:

K = Material factor as specified in 1.5.2(a) of this Part.

α = As given in (1) or (2), whichever is greater

(1) $15.5f_{BH}\left(1-\frac{y}{y_B}\right)$

(2) Where L is 230 metres and under: $\frac{6}{a}$

Where L is 400 metres and over: $\frac{10.5}{a}$

For intermediate values of L, α is to be obtained by linear interpolation.

a = $\sqrt{K}$ if at least 80% of side shell is of high tensile steel in the transverse section amidships. Otherwise, a is to be 1.0.

y_B = Vertical distance from the top of keel at midship to the horizontal neutral axis of the athwartship section of hull m

y = Vertical distance from the top of keel to the lower edge of the side shell plating under consideration m

f_B = Ratio of the required hull girder section modulus as calculated in Chapter 3 when Mild steel is used to the actual hull girder section modulus at bottom.

x = As given by the following formula (hereinafter the same applies in (a):

$$\frac{X}{0.3L}$$

X = Distanceb from the fore end for side shell plating afore the midship, or from the after end for side shell plating after the midship. However, where X is less than that 0.1L, X is to be taken as 0.1L and where X exceeds 0.3L, X is to be taken as 0.3 L. m

h_1 = As given in (1) or (2) as follows.

(1) For 0.3L from the fore end:

$$\frac{9}{4}(17-20C_b')(1-x)^2$$

(2) For elsewhere: 0

C_b' = Block coefficient
Where C_b exceeds 0.85, C_b' is to be taken as 0.85.

(b) In ships with longitudinal framing, the thickness of side shell plating is not to be less than that obtained from the following formula:

$$C_1C_2S\sqrt{d - 0.125D + 0.05L' + h_1} + 2.5 \quad \text{mm}$$

Where:

S = Spacing of longitudinal frames m

L′ = Length of ship specified in (a) m

C_1 = Coefficient specified in (a)

h_1 = As given in (a)

C_2 = Coefficient given by the following formula:

$$13\sqrt{\frac{K}{24-\alpha Kx}}$$, but it is not to be less than $3.78\sqrt{K}$

where:
K = Material factor as specified in 1.5.2(a) of this Part.

α	=	Coefficient specified in (a)
x	=	As given in (a)

7.3.3 The thickness of sheer strakes alongside the strength deck for the midship part is not to be less than 0.75 times that of the stringer plate of the strength deck. However, the thickness is not to be less than that of the adjacent side shell plating. For a rounded sheer strake the radius is not to be less than 15 times the thickness.

7.3.4 The thickness of bottom shell plating is to be as required in (a) and (b):

(a) In ships with transverse framing, the thickness is not to be less than that obtained from the following formula:

$$C_1C_2S\sqrt{d + 0.035L' + h_1} + 2.5 \quad \text{mm}$$

Where:

S	=	Spacing of transverse frames	m
L′	=	Length of ship specified in 7.3.2(a) of this Chapter	m
C_1	=	Coefficient specified in 7.3.2(a) of this Chapter	
h_1	=	Head specified in 7.3.2(a) of this Chapter	
C_2	=	Coefficient given by the following formula:	

$$\frac{91}{\sqrt{576-(15.5f_Bx)^2}}$$

f_B	=	As specified in 7.3.2(a) of this Chapter
x	=	As specified in 7.3.2(a) of this Chapter

(b) In ships with longitudinal framing, the thickness is not to be less than that obtained from the following formula:

$$C_1C_2S\sqrt{d + 0.035L' + h_1} + 2.5 \quad \text{mm}$$

Where:

S	=	Spacing of longitudinal frames	m
L'	=	Length of ship specified in 7.3.2(a) of this Chapter	m
C_1	=	Coefficient specified in 7.3.2(a) of this Chapter	
h_1	=	Head specified in 7.3.2(a) of this Chapter	
C_2	=	Coefficient given by the following formula	

$$13\sqrt{\frac{K}{24-15.5\,f_BKx}}$$, but it is not to be less than $3.78\sqrt{K}$

where:
K = Material factor as specified in 1.5.2(a) of this Part.

f_B = As specified in 7.3.2(a) of this Chapter

x = As specified in 7.3.2(a) of this Chapter

7.3.5 The thickness of bilge strakes for the midship part is not to be less than that obtained from the following formula. However, it is not to be less than the thickness of adjacent bottom plating.

$$\left\{5.22(\mathrm{d}+0.035\mathrm{L}')\left(\mathrm{R}+\frac{\mathrm{a}+\mathrm{b}}{2}\right)^{1.5}\times l\right\}^{0.4}+2.5 \quad mm$$

Where:

R	=	Bilge radius	m
a, b	=	Distance from the lower and upper turns of the bilge to the longitudinal frames nearest to the turns taking the distance outward from the bilge part as positive. However, where (a + b) is negative, (a + b) is to be taken as zero. (See Fig. II 7-1 of this Chapter)	m
L'	=	As specified in 7.3.2(a) of this Chapter	
l	=	Spacing of solid floors, bottom transverses or bilge brackets	m

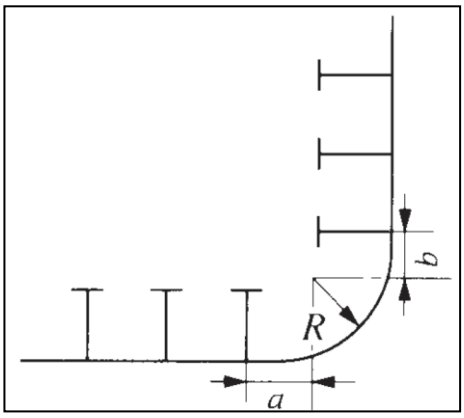

Fig. II 7-1
Measurement of a and b

Where some of the longitudinal frames at the bilge part in a longitudinal framing system are omitted, longitudinal frames are to be provided as near to the turns of the bilge as practicable and suitably constructed to maintain the continuity of strength.

Where longitudinal frames are provided at the bilge part at nearly the same spacing as that of bottom longitudinals, the bilge strakes may be in accordance with the requirements in 7.3.4 of this Chapter irrespective of the requirements in 7.3.5 of this Chapter.

Where bilge keels are fitted, special consideration is to be given to both the material and the arrangement.

7.4 Special Requirements for Shell Plating

7.4.1 Bow impact pressure

For shell plating where the bow impact pressure is assumed to be large, sufficient consideration is to be made regarding reinforcement against forces acting on the bow such as wave impact pressure.

7.4.2 Distance between frames

Where the distance between frames measured along the shell plating is remarkably different from the frame spacing, the shell plating is to be reinforced by such measures as increasing its thickness in accordance with the spacing of the frames.

7.4.3 Powerful engines

For shell plating at the aft part of ships that have especially powerful engines compared with the ship length, sufficient consideration is to be made regarding reinforcement against vibration.

7.4.4 Thickness of shell plating at the strengthened bottom forward

The thickness of shell plating at the strengthened bottom forward specified in Chapter 8 is to be as required in the following (a), (b) and (c). Where the ship has an unusually small draught at the ballast condition and has especially high speed for the ship's length, special consideration is to be given to the thickness of the shell plating.

(a) In ships having a bow draught of not more than $0.025L'$ at the ballast condition, the thickness of shell plating at the strengthened bottom forward is not to be less than that obtained from the following formula, where L' is as defined in 7.3.2 of this Chapter.

$$CS\sqrt{PK} + 2.5 \qquad \text{mm}$$

Where:

C = Coefficient given in Table II 7-1 of this Chapter
For intermediate values of α, C is to be obtained by linear interpolation.

α = Value of the spacing of frames or spacing of girders or longitudinal shell stiffeners, whichever is greater divided by S

S = Spacing of frames or girders or longitudinal shell stiffeners, whichever is the smallest m

P = Slamming impact pressure specified in Chapter 8 kPa

Table II 7-1
Value of C

α	1.0	1.2	1.4	1.6	1.8	2.0 and above
C	1.04	1.17	1.24	1.29	1.32	1.33

(b) In ships having a bow draught of not less than $0.037L'$ at the ballast condition, the thickness of shell plating at the strengthened bottom forward is not to be less than that specified in 7.3.4 of this Chapter or obtained from the following formula, whichever is greater. Where L' is as defined in 7.3.2 of this Chapter.

$$1.34S\sqrt{LK} + 2.5 \qquad \text{mm}$$

Where:

S = Spacing of frames or girders or longitudinal shell stiffeners, whichever is the smallest m

(c) In ships having an intermediate value of the bow draught specified in (a) and (b) above, the thickness is to be obtained by linear interpolation from the requirements in (a) and (b) above.

7.4.5 The thickness of shell plating adjacent to the stern frame or in way of spectacle bossing is not to be less than that obtained from the following formula. However, where the spacing of transverse frames in the after peak exceeds 610 mm or the length of ship exceeds 200 m, the thickness of the shell plating concerned is to be in accordance with the satisfaction of the Society.

4.5 + 0.09L mm

7.5 Side Plating in way of Superstructure

Where the superstructure deck is not designed as a strength deck, the thickness of the superstructure side plating is not to be less than that obtained from the following formula, but it is not to be less than 5.5 mm. Side plating of superstructures exceeding 0.15L in length, except for those at the end parts, is to be suitably increased in thickness. From the fore end to 0.25L abaft the fore end:

$1.15S\sqrt{L} + 2.0$ mm

Elsewhere: $0.95S\sqrt{L} + 2.0$ mm

Where:

S = Spacing of longitudinal or transverse frames at the position m

7.6 Compensation at Ends of Superstructure

7.6.1 Breaks of superstructures are to be strengthened according to the following requirements in (a) to (c):

(a) Sheer strakes of the strength deck are to extend well into the superstructure and are to be increased in thickness by not less than 20% above the normal thickness for sheerstrakes at that location for an appropriate span on both sides of the superstructure end.

(b) Side plating of the superstructure is to extend to an appropriate length beyond the end of the superstructure and taper off into the upper deck sheerstrakes to avoid an abrupt change of form at the break. The thickness of side plating at the ends of the superstructure is to be 20% greater than the normal thickness of superstructure side plating and this is to be taken as the standard.

(c) For superstructures located at the bow and stern, the requirements in (a) and (b) above may be suitably modified.

7.6.2 Openings in shell

Gangway ports, large freeing ports and other openings in the shell or bulwarks are to be kept well clear of the end of superstructures. Where holes are unavoidably required in the plating, they are to be made as small as possible and to be circular or oval in form.

7.7 Local Compensation of Shell Plating

7.7.1 Openings in shell

All openings in the shell plating are to have their corners well rounded and to be compensated as necessary.

7.7.2 Sea chest

Where a sea chest is provided in the shell plating for suction or discharge, the thickness of the sea chest is not to be less than that obtained from the following formula and to be suitably stiffened so as to provide sufficient rigidity as necessary. Also, the thickness is not to be less than the required thickness of the shell plating at that location.

$\sqrt{L} + 2.0$ mm

7.7.3 Openings such as hold ports and gangway ports are to be kept well clear of discontinuous parts in the hull construction, and the places where they are provided are to be locally compensated for so as to maintain the longitudinal and transverse strengths of the hull.

7.7.4 The shell plating fitted with hawse pipes and the plating below them is to be increased in thickness or to be doubled, and to be constructed so that their longitudinal seams are not damaged by anchors and anchor cables.

7.7.5 Hold ports and other similar openings

(a) Hold ports and other similar openings in the sides of ships below the freeboard deck are to be fitted with doors so designed as to ensure watertightness and structural integrity as the surrounding shell plating. Unless otherwise granted by the Society, these opening are to open outwards. The number of such openings is to be the minimum compatible with the design and proper working of the ship.

(b) Unless otherwise permitted by the Society, the lower edge of openings referred to in paragraph (a) is not to be below a line drawn parallel to the freeboard deck at side, which is at its lowest point at least 230 mm above the upper edge of the uppermost load line.

(c) Where it is permitted to arrange hold ports and other similar openings with their lower edge below the line specified in paragraph (b), additional features are to be fitted to maintain the watertight integrity.

(d) The fitting of a second door of equivalent strength and watertightness is none acceptable arrangement. A leakage detection device is to be provided in the compartment between the two doors. Drainage of this compartment to the bilges, controlled by a readily accessible screw down valve, is to be arranged. The outer door is to open outwards.

(e) Arrangements for bow doors and their inner doors, side doors and stern doors and their securings are to be in compliance with the requirements of a recognized organization, or with the applicable national standards of the society which provide an equivalent level of safety.

7.7.6 Where side scuttles are fitted in the shell plating, the location and the size are to be clearly indicated in the plan for approval.

Chapter 8

Strengthening of Bottom Structure Forward

8.1 General

8.1.1 In ships having a bow draught under 0.037L' in the ballast condition, the construction of the strengthened bottom forward is to be in accordance with the requirements in 6.8, where L' is as defined in 7.3.2.

8.1.2 In ships having an unusually small draught in the ballast condition and that have especially high speed for the ship's length, special attention is to be paid to the construction of the strengthened bottom forward.

8.1.3 In ships having a bow draught of not less than 0.037L' in the ballast condition, the construction of the strengthened bottom forward may be as specified in 5.2 to 5.6 of this Part.

8.1.4 The part of flat bottom forward from the position specified in Table II 8-1 of this Chapter as below is defined as the strengthened bottom forward.

Table II 8-1
After End of Range of Strengthened Bottom Forward

$V/\sqrt{L}$	and over		1.1	1.25	1.4	1.5	1.6	1.7
	less than	1.1	1.25	1.4	1.5	1.6	1.7	-
Position (from stem)		0.15L	0.175L	0.2L	0.225L	0.25L	0.275L	0.3L

8.1.5 Notwithstanding the requirement in 8.1.1 above, ships that have an especially small draught in ballast condition or where C_b is especially small are to have the strengthened bottom forward extended to the satisfaction of the Society.

8.2 Double Bottom Structure

8.2.1 Strengthening on the double bottom structure forward of transverse framing system is to be provided with one of the methods prescribed in the following 8.2.3 and 8.2.4 in association with the solid floor fitted on every frame.

8.2.2 Strengthening on double bottom structure forward of longitudinal framing system is to be provided in accordance with 8.2.5 hereunder in association with the solid floor fitted on the alternate frame.

8.2.3 Half height intercostal girder and intermediate frame

(a) The additional half-height intercostal girder is to be fitted with a spacing not more than 1.5 m apart and not more than 760 mm on each side of the center girder and is to be carried as far forward as practicable. The half height girder plate is to be of the thickness not less than that required for the floor in the machinery space and to be flanged on its upper edge.

(b) The intermediate frame is to be fitted between solid floors and is to extend from the center girder to the margin plate or to the first side girder outside the flat part of the bottom. The scantling of the intermediate frame is to be as required for the frame in the peak.

8.2.4 Spacing of girders

(a) Between the collision bulkhead and 0.05L abaft the after end of the strengthened bottom forward, full intercostal side girders in the bottom forward are to be so arranged that the spacing of the girders is not more than 2.3 m.

(b) Additional half-height girders or longitudinal shell stiffeners are to be fitted in the midway of the full side girder, between the collision bulkhead and 0.025L abaft the after end of strengthened bottom forward.

8.2.5 Solid floors

(a) Between the collision bulkhead and the after end of the strengthened bottom forward, solid floors are to be provided at every frame in the transverse framing system, or at least at alternate frames in the longitudinal framing system.

(b) The solid floors are to be strengthened by providing vertical stiffeners in way of half-height girders or longitudinal shell stiffeners, except where the longitudinal shell stiffeners are spaced especially close and the solid floors are adequately reinforced, the vertical stiffeners for the solid floors may be provided on alternate shell stiffeners.

8.2.6 The spacing of longitudinal frames on double bottom structure forward of longitudinal framing system is not to exceed 700 mm.

8.2.7 In ships having a bow draught of more than 0.025L′ but less than 0.037L′ in the ballast condition, where the construction and arrangement of the strengthened bottom forward are impracticable to comply with the above-mentioned requirements, suitable compensation is to be provided for the floors and side girders.

8.3 Scantlings of Longitudinal Shell Stiffeners or Bottom Longitudinals

8.3.1 In ships having a bow draught of not more than 0.025L' in the ballast condition, the section modulus of longitudinal shell stiffeners or bottom longitudinals in way of the strengthened bottom forward is not to be less than that obtained from the following formula:

$0.53P\lambda l^2 \quad cm^3$

Where:

l = Spacing of solid floors m

λ = $0.774\,l$
However, where the spacing (m) of longitudinal shell stiffeners or bottom longitudinals is not more than $0.774\,l$, λ is to be taken as the spacing.

P = Slamming impact pressure obtained from the following formula: kPa

$$2.48\frac{LC_1C_2}{\beta}$$

C_1 = Coefficient given in Table II 8-2 of this Chapter
For intermediate values of $V/\sqrt{L}$, C_1 is to be obtained by linear interpolation.

C_2 = Coefficient obtained from the following formula:
Where $V/\sqrt{L}$ is 1.0 and under: 0.4
Where $V/\sqrt{L}$ is over 1.0, but less than 1.3: $0.667\frac{V}{\sqrt{L}} - 0.267$
Where $V/\sqrt{L}$ is 1.3 and over: $1.5\frac{V}{\sqrt{L}} - 1.35$

β = Slope of the ship's bottom obtained from the following formula, but C_2/β need not be taken as greater than 11.43 (See Fig. II 8-1 of this Chapter).

$$\frac{0.0025L}{b}$$

b = Horizontal distance measured in the station 0.2L from the stem, from the centre line of ship to the intersection of the horizontal line 0.0025L above the top of keel with the shell plating (See Fig. II 8-1 of this Chapter) m

Table II 8-2
Value of C_1

$V/\sqrt{L}$	1.0 and under	1.1	1.2	1.3	1.4	1.5 and above
C_1	0.12	0.18	0.23	0.26	0.28	0.29

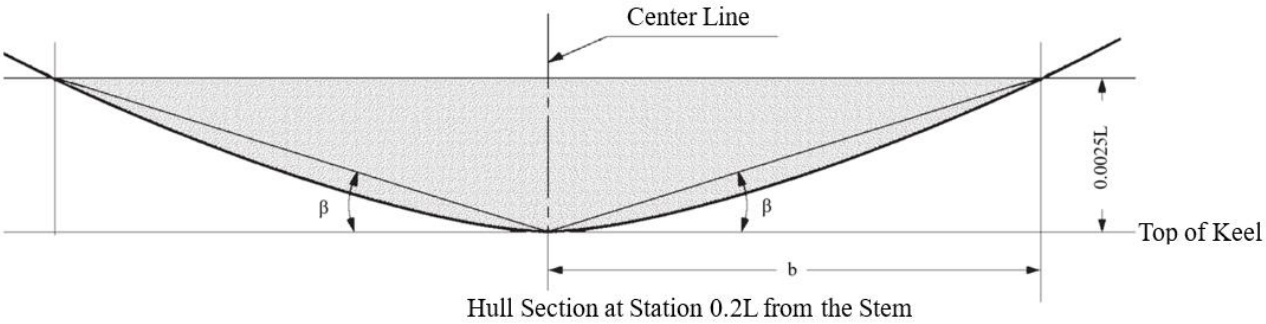

Fig. II 8-1
Measurement of b

8.3.2 In ships having a bow draught of more than 0.025L′ but less than 0.037L′ in ballast condition, the section modulus of longitudinal shell stiffeners or bottom longitudinals in way of the strengthened bottom forward is to be obtained by linear interpolation from the values given by the requirements in 8.3.1 above and 5.6 of this Part.

Chapter 9
Beams and Deck Longitudinals

9.1 General

9.1.1 Beam spacing

(a) Transverse beams are to be fitted on every frame in the following cases:
- (i) At the freeboard deck in ships exceeding 4.6 m in depth and having no deck below the freeboard deck.
- (ii) At the freeboard deck under bridge for 8 frame spacings from each end of the bridge.
- (iii) At the strength deck in ships more than 105 m in length.
- (iv) At the unsheathed strength deck.
- (v) At the unsheathed deck where the frame spacing exceeds 760 mm.
- (vi) At the tank top, tunnel top and bulkhead recess.
- (vii) At the forecastle deck for 0.125L from the fore end.

(b) Besides the cases mentioned above, transverse beams are to be fitted not more than 2 frame spacings apart.

9.1.2 Transverse beams in different tiers if fitted on alternate frames are to be fitted on the same frames.

9.2 Beams

9.2.1 The section modulus of the beam is not to be less than that derived from the following formula:

$4.8Ksh\,l^2$ cm^3

where:

K = Material factor as specified in 1.5.2(a) of this Part.
s = The spacing of the beam, in m.
l = The horizontal span, in m.
= The span between adjacent lines of girder supports, or from the inner edge of the beam knee to the nearest line of support, whichever is greater.
≥ 0.2 B, normally.
≤ 4.6 m, under the top of deep tank and in way of the bulkhead recess.

* For decks intended to carry ordinary cargoes or stores, the value of h for head (m) is to be in accordance with the following

h = The actual height, in m, as follows
= The actual height from the deck to the deck above, measured at the side of the ship, for the beam at the deck on which cargo or store may be carried.
Where the cargo load differs from 7.04 kN/m^3 multiplied by the tween-deck height, in m, the height is to be proportionately adjusted.
= For bulkhead recesses and tunnel flats is the height, in m, to the bulkhead deck at the centerline; where that height is less than 6.10 m, the value of h is to be taken as 0.8 times the actual height plus 1.22 m.
= For deep-tank tops is not to be less than two-thirds of the distance from the top of the tank to the top of the overflow; it is not to be less than given in Table II 9-1/ e type of deck, appropriate to the length of the ship, the height to the load line or two-thirds of the height to the bulkhead or freeboard deck, whichever is greatest. The section modulus is not to be less than that be required for cargo beams.

*Elsewhere for the weather deck, the value of h for head (m) may be taken from the appropriate type of decks

h = The value given in Table II 9-1 of this Chapter and the associated note, for beams at other decks than those mentioned above.

*Note: The value of h_1 for load (kN/m^2) is to be obtained by multiplying the head mentioned above by 7.

9.2.2 The size of the beam is to be suitably increased where heavy concentrated load such as at end of the deck house, in way of the mast, king post, winch, auxiliary machinery, etc. is to be carried by the beam.

9.2.3 Where no hold pillar is fitted at the hatch corner, the hatch end beam is to be in accordance with 10.5 of this Part.

9.2.4 Beams on bulkhead recesses and others

The section modulus of beams at deck forming the top of bulkhead recesses, tunnels and tunnel recesses is not to be less than that obtained from the formula in 14.2.8 of this Part.

9.2.5 Beams on top of deep tanks

The section modulus of beams at deck forming the top of deep tanks is to be in accordance with this Chapter, and not to be less than that obtained from the formula in 16.2.3 of this Part, taking the top of deep tanks as the lower end of h and beams as stiffeners.

9.3 Deck Longitudinals

9.3.1 The standard spacing of deck longitudinals is to be as given in 5.6.2 of this Part.

9.3.2 Deck longitudinals are to be supported by transverse web beams of a spacing not more than 3.6 m apart.

9.3.3 The section modulus of the deck longitudinal is to be determined by the following formula:

$CKshl^2$ cm^3

where:

C = Constant as given in Table II 9-2 of this Chapter.
K = Material factor as specified in 1.5.2(a) of this Part.
s = Spacing of the deck longitudinal, in m.
h = The height as defined in 9.2.1 of this Chapter, in m.
l = The span between the web beams or between the web beam and the midpoint of end bracket, in m.

9.3.4 Continuity of deck longitudinals

(a) Deck longitudinals are to be fitted continuously through transverse web beams.

(b) Where the deck longitudinal is cut at the bulkhead, sufficient end connections are to be provided so as to effectively develop the sectional area and its resistance to bending.

9.3.5 In the part where the longitudinal system is transformed to the transverse system, care is to be taken to avoid any abrupt discontinuity.

9.4 End Attachment of Beams and Deck Longitudinals

9.4.1 Beam Knees

(a) Deck beams are to be connected to frames or stiffeners of the longitudinal bulkhead by beam knees. The scantlings of the beam knee brackets are to be obtained from the following formulae:

t_1	=	$1.26 \times \sqrt[3]{Z} + 1$	mm for plain bracket
t_2	=	$t_1 - 2$	mm for flanged bracket
t_{min}	=	6.5	mm
l	=	$50\sqrt{Z/t_1}$	mm
l_{min}	=	100	mm
b	=	$40 + \frac{Z}{30}$	mm

where:

t = Thickness of bracket, in mm.

Z = Section modulus of the smaller section to be connected, in cm^3.

l = Arm length, i.e. the length of the welded connection, in mm.

b = Width of flange, in mm, but is to be at least 50 mm and needed not be greater than 90 mm.

(b) For single deck ships within 0.6L amidships the arm length of the beam bracket is to be increased by 20%.

9.4.2 Longitudinally framed decks

(a) The bracket connecting the side frame to the deck clear of the transverse is to be in accordance with 9.4.1 (a) above based on the modulus of the frame, but the horizontal arm of the bracket is to be extended to a longitudinal.

(b) Where the deck longitudinal is cut at the transverse bulkhead, the minimum sectional area of the bracket at the end of the longitudinal, and also the area of weld connection, are to be equal to the sectional area of the longitudinal. The area of weld connection is defined as the product of throat thickness and length of weld. The depth of the bracket below the longitudinal is to be at least equal to the depth of the longitudinal.

Table II 9-1
Height h

Type of decks	L (m)	h (m)
(a) - Exposed freeboard deck having no deck below	90 ≤ L ≤ 110	0.02 L + 0.76
	110 < L	2.90
(b) - Exposed freeboard deck having deck below - Exposed superstructure deck first above the freeboard deck for 0.25L from fore end	90 ≤ L ≤ 100	0.0029 L+ 2.0
	100 < L	2.29
(c) - Forecastle deck first above the freeboard deck - Bridge deck first above the freeboard deck - Exposed superstructure deck, over 0.1L in length first above the freeboard deck between 0.25L from fore end and 0.2L from aft end - The freeboard deck within superstructure - The deck below freeboard deck	90 ≤ L ≤ 100	0.0168 L
	100 < L ≤ 110	0.021 L-0.41
	110 < L ≤ 120	0.008 L+1.02
	120 < L	1.98
(d) - Exposed bridge deck, not over 0.1L in length first above the freeboard deck - Poop deck first above the freeboard deck - Exposed superstructure deck first above the freeboard deck for 0.2L from the aft end - Exposed superstructure deck second above the freeboard deck(1) - First tier of deck house above the freeboard deck	90 ≤ L ≤ 100	0.01 L+0.31
	100 < L ≤ 110	0.014 L-0.1
	110 < L	0.02 L-0.76
(e) - Second tier of deck house above the freeboard deck(2)	90 ≤ L ≤ 100	0.01 L+0.15
	100 < L ≤ 110	1.15
	110 < L	0.012 L-0.17
(f) - The third and higher tiers of deck house above the freeboard deck(2) - Superstructure decks (third and higher above the freeboard deck) which contain only accommodation spaces	90 ≤ L	0.91

Notes:

(1) Where the superstructure above the first superstructure extends forward of 0.5L amidhsips the value of h is to be suitably increased.

(2) Where the deck to which the side shell plating does not extend is generally used only as weather covering, the value of h may be reduced, but in no case is to be less than the minimum value 0.46 m.

Table II 9-2
Constant C

Type of decks	C
1. Strength deck	7.7
2. Within the line of openings at all decks	4.8
3. Effective second and third decks	7.0
4. Platform deck	4.8

Chapter 10
Deck Girders and Pillars

10.1 General

10.1.1 Deck beams are to be supported by longitudinal deck girders in association with pillars or strong hatch end beams.

10.1.2 Deck girders spacing

(a) In way of the bulkhead recess and the top of tank, deck girders are to be spaced not more than 4.6 m apart.

(b) Additional girders are to be fitted under masts, derrick posts, deck machinery or other heavy concentrated load areas.

10.1.3 The deck plating in way of the girder is to be increased in thickness or effectively stiffened where necessary to provide an effective flange of the girder.

10.1.4 Pillars in the tween deck and holds are to be in the same vertical line as far as possible.

10.1.5 Wide spaced pillars are to be fitted in line with keelsons or double bottom girders, and if infeasible, to be as close as practicable.

10.1.6 The seating under wide spaced pillars is to be of ample strength and of a character which provides effective distribution of the load.

10.1.7 Where the pillar is not directly above the intersection of the solid floor and the intercostal girder, the partial floor and intercostal girder are to be fitted to support the pillar.

10.1.8 Manholes and lightening holes are not to be cut in the floor and girder below the heel of pillars.

10.1.9 Where the heel of pillars is carried on a tunnel, suitable arrangement is to be made to support the load.

10.1.10 Additional supports are to be arranged at the end and corner of the deck house, in the machinery space, at the end of partial superstructure and under the heavy concentrated load areas.

10.2 Deck Girders Clear of Tanks

10.2.1 Scantling

(a) The section modulus is not to be less than that obtained from the following formula:

$4.8Kb\ h\ l^2$ cm^3

where:

K = Material factor as specified in 1.5.2(a) of this Part.
b = The mean breadth of the area of the deck supported, in m.
h = The height as defined in 9.2.1 of this Part, in m.
l = The span between centers of supporting pillars, or between the pillar and the center of end bracket at the bulkhead, in m.

(b) The depth of the web of the girder is not to be less than 5% of the span *l*.

(c) The thickness of web plates is not to be less than 1% of the depth plus 4 mm but is not to be less than 8.5 mm, 10 mm, 12.5 mm or 15 mm where the sectional area of face plates is 38 cm^2, 65 cm^2, 130 cm^2 or 195 cm^2 respectively. The thickness for intermediate area may be obtained by interpolation.

10.2.2 Where the girder is subjected to concentrated load such as the pillar out of line, the hanging load, etc., the section modulus is to be specially calculated.

10.2.3 Tripping brackets are to be fitted at intervals of about 3 m and near the change of section. Where the breadth of the flanges on either side of the web exceeds 200 mm, tripping brackets are to be arranged to support the flange. Additional supports are to be provided for the flanges where their breadth exceeds 400 mm.

10.2.4 The girder is to be attached to the bulkhead by flanged bracket. At the bulkhead, the stiffener is to be suitably strengthened to provide ample support to the girder.

10.3 Deck Transverses

The deck transverse supporting deck longitudinal is to be of the size obtained from the formula given in 10.2 of this Chapter, where *l* is the span, in m, between supporting girders, or between the girder and the ship's side deducting $\frac{1}{2}$ the distance between the toe of the bracket and the ship's side; b is the spacing of transverse, in m; and h is the height, in m, as defined in 9.2.1 of this Part. The requirement for minimum depth and thickness of web plates and arrangement of tripping brackets are to be the same as given in 10.2 of this Part.

10.4 Hatch Side Girders

10.4.1 Scantling for hatch side girder supporting the transverse shifting beam or hatch cover is to be obtained in the same manner as the deck girder.

10.4.2 The hatch side girder along the lower deck hatch under the trunk in which no cover is fitted is to be increased in proportion to the extra load to be carried due to the loading up into the trunk.

10.4.3 Where the deep coaming is fitted above such as at weather deck, the girder below deck may be modified so as to obtain a section modulus when taken in conjunction with the coaming up to and including the horizontal coaming stiffener, of not less than that given by the following formula:

$6.5\ Kb\ h\ l^2$ cm^3

where K, *l*, b and h are as specified in 10.2.1 of this Chapter.

10.4.4 Where the hatch side girder is not continuous under the deck beyond the hatchway to the bulkhead, the bracket extending for at least 2 frame spaces beyond the end of the hatchway is to be fitted.

10.4.5 The gusset plate is to be fitted at the hatchway corner and arranged so as to effectively connect the flange of the hatch side girder and the hatch end beam.

10.5 Hatch End Beams

10.5.1 The hatch end beam supported only by a center line pillar without a pillar at the corner of the hatchway is classified into 2 cases as follows:

Case 1: Where the deck girder is not fitted on the line of the hatch side beyond the hatchway.

Case 2: Where the deck girder is fitted fore and aft beyond the hatchway.

10.5.2 The section modulus is not to be less than that derived from the following formula:

For Case 1: $K\,A\,B\,h\,l$ cm^3

For Case 2: $K\,(A\,B + C\,D)\,h\,l$ cm^3

where:

l = The distance from the center of beam bracket to the center line, in m.

A = The length of the hatchway, in m.

B = The distance from the center line to the midpoint between the hatch side and the line of the toe of the beam knee, in m.

C = The distance from a point midway between the center line and the line of hatch side to the midpoint between the hatch side and the line of the toe of beam knee; where no girder is fitted on the center line beyond the hatchway, C is equal to B, in m.

D = The distance from the hatch end beam to the adjacent hold bulkhead, in m.

h = The height as specified in 9.2.1 of this Chapter, in m.

K = $2.20 + 1.29\,(F/N)$ when $F/N \leq 0.6$

= $4.28 - 2.17\,(F/N)$ when $F/N > 0.6$

N = One-half the breadth of the ship in way of the hatch-end beam, in m.

F = Distance from the side of the ship to the hatch side girder, in m.

10.5.3 The depth and thickness of the hatch end beam are to be in accordance with the requirement specified in 10.2.1 of this Chapter.

10.5.4 The weather deck hatch end beam having a deep coaming above the deck for the full width of the hatchway may have the face plate area reduced from a point well within the line of the hatch side girder to approximately 50% of the required area at the center line.

10.5.5 Tripping brackets are to be fitted to hatch end beams in accordance with 10.2.3.

10.5.6 The frame in way of the hatch end beam is to be strengthened if considered necessary.

10.6 Pillars

10.6.1 The sectional area of pillars is to be determined from the following formula:

$$\frac{W}{k - \frac{nl}{r}} \qquad cm^2$$

where:

l = The distance from the top of the inner bottom, deck or other structure on which the pillar is based to the under side of the beam or girder supported, in m.

r = The least radius of gyration, in cm.

W = Deck load supported by the pillar, in kN.

= $9.81S\ b\ h + W_o$

S = The mean length of the area supported by the pillar, in m.

b = The mean width of the area supported by the pillar. Normally the minimum value of b is to be taken as 0.2 B, in m.

h = Deck height for the area supported as defined in the 9.2.1 of this Part, in m.

W_o = Deck load of the upper tween deck pillar above the lower pillar in question, as defined in 10.6.2 of this Chapter, in kN.

k = 12.09 for mild steel

= 16.11 for HT32

= 18.12 for HT36

n = 4.44 for mild steel

= 7.47 for HT32

= 9.00 for HT36

10.6.2 Load of upper pillar

(a) Where no pillar is fitted in the tween deck space directly above the deck supported by the pillar in question, W_o is equal to zero.

(b) Where the pillar is fitted in the tween deck space directly above the deck supported by the pillar in question, W_o is to be taken equal to W for the tween deck pillar.

(c) Where the pillar is not directly in line with those above or not on the line of the girder but which supports the load from above or the deck girder through a system of supplementary fore and aft or transverse girder, W_o is to be the actual load transmitted to the pillar in question through the system of the girder.

10.6.3 The pillar under the top of the deep tank is to be of solid section and of a size not less than that required by 10.6.1 or the sectional area required by the following formula, whichever is the greater:

$1.09\ kS\ b\ h \quad cm^2$

where:

S and b are as specified in 10.6.1 of this Part.

k = 1.00 for mild steel

= 0.75 for HT32

= 0.67 for HT36

h = The vertical distance, in m, from the top of the tank to the load line, or to 2/3 of the depth to the freeboard or bulkhead deck, or to1/2 of the height from the tank top to the overflow pipe, whichever is the greatest.

10.7 End Attachment of Pillars

10.7.1 Effective arrangement is to be made to distribute the load at the head and heel of the pillar.

10.7.2 Wide-spaced pillars are to bear solidly at head and heel and are to be attached by welding properly proportioned on the size of the pillar.

10.7.3 The end attachment of the pillar under bulkhead recess, tunnel top or deep tank top which may be subjected to tension load is to be efficiently welded to withstand the tension load.

Chapter 11
Decks

11.1 General

11.1.1 All ships are required to be plated over in the following portions of the deck:

(a) In way of the crown of the machinery space.

(b) In way of the top of the tank.

(c) In way of the step in the bulkhead.

11.1.2 In cases other than specified in 11.1.1 of this Chapter, the deck may be either plated throughout or fitted with the stringer and the tie plate.

11.1.3 Passability through decks by frames

(a) The frame is not to extend through the weather deck, tank top, or watertight flat, unless efficient means for watertightness is provided.

(b) Where the frame passes through other tight deck below the weather deck or the freeboard deck within superstructure which is not fully and permanently enclosed, or the bulkhead deck in a passenger ship, efficient means for watertightness is to be provided.

11.1.4 Approved deck composition may be laid on the steel deck provided that the steel deck is to be coated with a suitable material in order to prevent corrosive action and that the composition is to be effectively secured to the deck.

11.1.5 The thickness of deck plating within the midship 0.4L for ships of 90 m or more in length is neither to be less than that required to obtain the section modulus for longitudinal strength specified in Chapter 3 of this Part, nor that required by this Chapter.

11.2 Tapering of Deck Sectional Areas and Deck Transitions

11.2.1 Deck sectional areas used in the deck area and section modulus calculations are to be maintained throughout the midship 0.4L. They may be gradually reduced to 50% the normal requirement at 0.15L from the ends.

11.2.2 In way of the superstructure beyond the midship 0.4L the strength deck area may be reduced to approximately 70% of the normal requirement at that position.

11.2.3 Where effective areas in the same deck change, as in way of partial superstructures or over discontinuous decks, care is to be taken to extend the heavier plating well into the section of the ship in which the lesser requirements apply, to obtain a good transition from one arrangement to the other. Partial decks within the hull are to be tapered off to the shell by means of long brackets. Where effective decks change in level, the change is to be accomplished by a gradually sloping section or the deck material at each level is to be effectively overlapped and thoroughly tied together by diaphragms, webs, brackets, etc., in such a manner as will compensate for the discontinuity of the structure.

11.3 Plated Decks

11.3.1 If the thickness of the strength deck plating is less than that of the side shell plating, a stringer plate having the width of the sheer strake and the thickness of the side shell plating is to be fitted to strength deck.

11.3.2 Thickness of strength deck plating amidships outside line of opening

(a) The minimum thickness of the strength deck plating amidships outside line of the opening is not to be less than that obtained from the following formulae:

(i) For decks on transverse beams:

(1) $t = 0.01s + 2.3$ mm $s \leq 760$ mm
$t = 0.0066s + 4.9$ .mm $s > 760$ mm
To extend over 0.8L amidships, beyond which the thickness forward and aft is not to be less than required for forecastle and poop deck plating respectively.

(2) and $t = \frac{s(L+45.73)}{25L+6082}$ mm, which ever is greater
To extend over 0.4L amidships and tapered beyond in a manner the same as in 11.2.3 of this Chapter.
Ships designed on still water bending moment envelope curves will be specially considered.

(ii) For decks on longitudinal beams:

(1) $t = 0.009s + 2.4$ .mm $s \leq 760$ mm
$t = 0.006s + 4.7$ .mm $s > 760$ mm
To extend over 0.8L amidships, beyond which the thickness forward and aft is not to be less than required for forecastle and poop deck plating respectively.

(2) and $t = \frac{s(L+45.73)}{26L+8681}$ mm, for $L \leq 183$ m, which ever is greater

To extend over 0.4L amidships and tapered beyond in a manner the same as in 11.2.3 of this Chapter.
Ships designed on still water bending moment envelope curves will be specially considered.

where:

s = Beam spacing, in mm.
L = Length of ship, in m

(b) In small ships, the minimum thickness of the deck plating outside line of the opening may be reduced to the thickness of the plating inside the line of the opening, provided that the required effective deck area is fully distributed to the thicker plate along the hatchway and the stringer plate.

11.3.3 The thickness of the strength deck plating amidships inside the line of the opening is to be obtained from the following formulae:

(a) Exposed strength deck within line of openings

$t = 0.01s + 0.9$ mm $s \leq 760$ mm
$t = 0.0067s + 3.4$ mm $s > 760$ mm

The equation above applies amidships. At the forward and aft ends, plating is to be as required for exposed forecastle and poop deck.

(b) Enclosed strength deck within line of openings

$t = 0.009s + 0.8$ mm $s \leq 760$ mm
$t = 0.0039s + 4.3$ mm $s > 760$ mm

where:

s = Beam spacing, in mm.

11.3.4 The thickness of the strength deck plating at 0.1L from the ends is not to be less than obtained from the following formula:

$t = 0.025\,L + 4.7$ mm

where:

L = Length of ship, in m.

11.3.5 The thickness of the plating of the lower deck which is designated as platform deck and considered to be non-effective deck for longitudinal strength, is not to be less than that obtained from the following formula.

(a) Platform decks in enclosed cargo spaces

$t = Ks\sqrt{h} + a$ mm , but not less than 5.0 mm
K = 0.00394
a = 1.5 mm
h = tween deck height in m

When a design load is specified, h is to be taken as p/n where p is the specified design load, in kN/m^2 , and n is defined as 7.04.

(b) Platform decks in enclosed accommodation spaces

t = 0.0058s + 1.0 mm, but not less than 4.5 mm

Where the platform decks are subjected to hull girder bending, special consideration is to be given to the structural stability of deck supporting members.

11.3.6 The minimum thickness of the effective lower deck plating is not to be less than the following:

(a) Second deck:

	D	> 15.2 m :	Same as 11.3.2 (a)(i)
15.2 m ≥	D	> 12.8 m :	Same as 11.3.2 (a)(ii)
	D	< 12.8 m :	Same as 11.3.3

where:
D = Depth of ship, in m.

(b) Third deck:

	D	> 17.7 m :	Same as 11.3.2 (a)(i)
17.7 m ≥	D	> 13.4 m :	Same as 11.3.2(a)(ii)
13.4 m ≥	D	> 9.8 m :	Same as 11.3.3
	D	< 9.8 m :	Same as 11.3.5

where:
D = Depth of ship, in m.

11.3.7 Where the superstructure deck is not designed as the strength deck, the minimum thickness of superstructure deck plating is not to be less than that obtained from the following formulae:

(a) Forecastle and bridge deck plating:

t = 0.009 s + 2.4 mm	s ≤ 760 mm, L > 122 m
t = 0.006 s + 4.7 mm	s > 760 mm, L > 122 m
t = 0.01 s + 0.9 mm	s ≤ 760 mm, L ≤ 122 m
t = 0.0067 s + 3.4 mm	s > 760 mm, L ≤ 122 m

where:
L = Length of ship, in m.
s = Beam spacing, in mm.

(b) Poop deck plating:

$t = 0.01\ s + 0.9$ mm $s \leq 760$ mm, $L > 100$ m
$t = 0.0067\ s + 3.4$ mm $s > 760$ mm, $L > 100$ m
$t = 0.009\ s + 0.8$ mm $s \leq 760$ mm, $L \leq 100$ m
$t = 0.0039\ s + 4.3$ mm $s > 760$ mm, $L \leq 100$ m

(c) Exposed bridge deck plating:

$t = 0.01s + 0.25$ mm $s \leq 760$ mm
$t = 0.0043s + 4.6$ mm $s > 760$ mm

where
L = Length of ship, in m.
s = Beam spacing, in mm.

(d) Where the beam is fitted on every alternative frame, the thickness given in 11 3.7(a) and (b) above is to be increased by 50%.

11.3.8 Where the plated deck of the strength deck is covered by the superstructure or the deck house the minimum thickness may be reduced by 1 mm.

11.3.9 Thickness of effective deck plating under boiler, in bunker space or refrigerated space

(a) The thickness of the effective deck plating under the boiler is to be increased by 3 mm to the required thickness specified above.

(b) The thickness of the deck plating in the refrigerating space where no special means for the protection against corrosion of the deck is provided, is to be increased by 1 mm to the required thickness specified above.

11.3.10 Deck plating over deep tank, tunnel, or forming recess or step in bulkhead

(a) The deck plating over the tunnel or forming the recess or the step in the bulkhead is to be of a thickness not less than that required for the plating of the ordinary bulkhead at the same level plus 1 mm.

(b) The deck plating over the deep tank is to be of a thickness not less than that required for the plating of the deep tank bulkhead at the same level plus 1 mm.

11.4 Compensation at Opening

11.4.1 To avoid excessive local stress at the corner of the hatchway or other openings in the strength deck or the effective deck, the plating at the corner is to be well rounded with insert plates of increased thickness or other approved equivalent. Elliptical or parabolic hatch corners without insert plates of an approved design may be accepted.

11.4.2 In way of the machinery space, additional transverse strengthening is to be provided by means of web frames and strong beams, with proper pillaring or other equivalent arrangements.

11.5 Thickness of Deck Plating Loaded by Wheeled Vehicles

11.5.1 The thickness of deck plating loaded by wheeled vehicles is to be determined by considering the concentrated loads from the wheeled vehicles.

11.6 Higher-strength Material

11.6.1 In general, proposed applications of higher-strength material for decks are to be accompanied by submission of calculations in support of adequate strength against buckling. Care is to be exercised to avoid the adoption of reduced thickness of material such as might be subject to damage during normal operation.

11.6.2 The thickness of deck plating for longitudinally framed decks, where constructed of higher-strength material, is to be not less than required for longitudinal strength, nor is it to be less than obtained from the following equation.

$t_{hts} = (t_{ms} - C)K + C$ mm

where

t_{ms} = thickness of ordinary-strength steel, in mm, as required by the Rules

C = 4.3 mm for exposed deck plating.

K = Material factor as specified in 1.5.2(a) of this Part

11.6.3 The thickness t_{hts} is also to be determined from the above equation using the t_{ms} as obtained from 11.3.2(a)(ii), with a factor of 0.92/ K in lieu of K. The factor 0.92/ K is not to be less than 1.00.

11.6.4 Where the deck plating is transversely framed, or where the Rules do not provide a specific thickness for the deck plating, the thickness of the higher-strength material will be specially considered, taking into consideration the size of the shipship, intended service and the requirements of the Rules.

Chapter 12

Superstructures and Deckhouses

12.1 General

12.1.1 All ships classed for ocean service are to have adequate bow height or deck sheer, sufficient length and height of superstructure fitted with efficient closing appliances in compliance with the requirements of International Convention on Load Line, 1966.

12.1.2 A bridge or poop is not to be regarded as enclosed unless access is provided for the crew to reach machinery and other working spaces inside these superstructures by alternative means which are available at all times when bulkhead openings are closed.

12.1.3 Superstructures with openings which do not fully comply 12.4 of this Part are to be considered as open superstructures.

12.2 Side Plating and Deck of Superstructures

12.2.1 The thickness of the side plating of the superstructure is to be determined from 7.5 and 7.6 of this Part.

12.2.2 The scantling of the superstructure deck is to be as required by 11.3.3 of this Part.

12.2.3 Superstructure Stiffeners

(a) The superstructure frame is to be of the scantling as required by 6.6 of this Part.

(b) Transverse rigidity is to be maintained by fitting with web frames or the partial bulkhead over the main bulkhead and elsewhere as may be required.

12.2.4 The break in the continuity of the superstructure is to be specially strengthened as required in 7.5 of this part.

12.3 Superstructure End Bulkheads and Deckhouse Walls

12.3.1 Stiffeners

(a) The section modulus of stiffeners, in association with the plating to which they are attached, is not to be less than that obtained from the following formula:

$3.5\ s\ h\ l^2$ $\quad$ cm^3

where:

s	=	Spacing of stiffeners, in m.
l	=	Tween deck height, in m. However, where l is less than 2 m, l is to be taken as 2 m.
h	=	a[(b f) – y]c, the design head, in m.
	=	For unprotected front bulkheads on the lowest tier, h is to be taken as not less than 2.5 +L/100 m in which L need not be taken as greater than 300 m. For all other bulkheads the minimum value of h is to be not less than one-half that required for unprotected front bulkheads on the lowest tier.
a	=	Coefficient given in Table II 12-1.
b	=	$1.0 + \left(\frac{\frac{x}{L} - 0.45}{C_b + 0.2}\right)^2$ $\quad$ where $\frac{x}{L} \leq 0.45$

$$= \quad 1.0 + 1.5\left(\frac{\frac{x}{L} - 0.45}{C_b + 0.2}\right)^2 \quad \text{where } \frac{x}{L} > 0.45$$

Table II 12-1
Values of a

Bulkhead location	Values of a
Unprotected front, lowest tier	$2.0 + \frac{L_2}{120}$
Unprotected front, 2nd tier	$1.0 + \frac{L_2}{120}$
Unprotected front, 3nd tier	$0.5 + \frac{L_2}{150}$
Protected front, all tiers	$0.5 + \frac{L_2}{150}$
Sides, all tiers	$0.5 + \frac{L_2}{150}$
Aft ends, aft of amidships, all tiers	$0.7 + \frac{L_2}{1000} - 0.8\frac{x}{L}$
Aft ends, forward of amidships, all tiers	$0.5 + \frac{L_2}{1000} - 0.4\frac{x}{L}$
Note: L_2 =Length of ship (m) need not be taken as greater than 300 m	

where:

C_b = Block coefficient at summer load waterline, based on the ship's length L not to be taken as less than 0.60 nor greater than 0.80. For aft end bulkheads forward of amidships, C_b need not be taken as less than 0.80.

x = Distance in m between the after perpendicular and the bulkhead being considered. Deckhouse side bulkheads are to be divided into equal parts not exceeding 0.15L in length and x is to be measured from the after perpendicular to the center of each part considered.

L = Length of ship, in m.

f = Coefficient given in Table II 12-2.

y = Vertical distance from the summer load waterline to the midpoint of the stiffener span, in m.

c = $0.3 + 0.7\frac{b'}{B'}$
but is not to be taken as less than 1.0 for exposed machinery casing bulkheads.
In no case is $\frac{b'}{B'}$ to be taken as less than 0.25.

b' = Breadth of deckhouse at the position being considered.

B' = Actual breadth of the ship at the freeboard deck at the position being considered.

Table II 12-2
Values of f

L (m)	f
L ≤ 150	$\frac{L\left(e^{-\frac{L}{300}}\right)}{10} - \left[1 - \left(\frac{L}{150}\right)^2\right]$
150 < L < 300	$\frac{L\left(e^{-\frac{L}{300}}\right)}{10}$
L ≥ 300	11.03

(b) Both ends of webs of lower tier bulkhead stiffeners are to be effectively welded to decks. The scantlings of stiffeners having other types of end connections are to be specially considered.

12.3.2 Thickness of plating

(a) The thickness of the plating is not to be less than that obtained from the following formula:

$t = 3s\sqrt{h}$ mm

where s and h are as defined in 12.3.1 of this Part. When determining h, y is to be measured to the middle of the plate. In no case is the thickness for the lowest tier bulkheads to be less than $5.0 + \frac{L_2}{100}$ mm. For other tier bulkheads the thickness is to be not less than $4.0 + \frac{L_2}{100}$ mm, however, not less than 5.0 mm, where L_2 need not be taken as greater than 300 m.

(b) For small coasters and fishing ships up to 40 m in length the above mentioned minimum thickness may be reduced by 0.5 mm.

12.3.3 Front end bulkheads of raised quarter deck

(a) Front end bulkheads of the raised quarter deck are to have a plating of the thickness not less than that required for the bridge front bulkhead.

(b) The size of stiffeners for the front end bulkheads are to be specially considered on the basis of the strength of the ship.

12.4 Openings in End Bulkheads of Enclosed Superstructures

12.4.1 All openings in the bulkheads of enclosed superstructures are to be provided with efficient means of closing, so that in any sea conditions water will not penetrate the ship. Openings and closing appliances are to be framed or stiffened so that the whole structure is equivalent to the unpierced bulkhead when closed.

12.4.2 Doors for access openings into enclosed superstructures are to be of steel or other equivalent material, permanently and strongly attached to the bulkhead. The doors are to be provided with gaskets and clamping devices or other equivalent arrangements, permanently attached to the bulkhead or to the doors themselves, and the doors are to be so arranged that they can be operated from both sides of the bulkhead.

12.4.3 Doors are to be opened outwards to provide additional security against the impact of the sea.

12.4.4 Except as otherwise provided in the Rules, the height of sills of access openings in bulkheads at the ends of enclosed superstructures is to be at least 380 mm above the deck.

12.4.5 Side scuttles in end bulkheads of enclosed superstructures are to be of substantial construction and provided with efficient inside dead lights (See 13.3 of this Part).

12.4.6 A bridge or poop is not regarded as enclosed unless alternate means of access is provided for the crew from any point on the exposed portion of uppermost continuous deck to reach machinery space or other working spaces within these superstructures when the bulkhead openings are closed.

Chapter 12A

Helicopter Decks and Facilities

12A.1 General

12A.1.1 The structure of the helicopter deck is to be designed to suit landing of the largest type of helicopter intended to use.

12A.1.2 Ships with helicopter decks built in accordance with these rules are to be assigned a class notation "Helideck" affixed to classification symbols, which is classified into four classes: **Helideck-I**, **Helideck-II**, **Helideck-III** and **Helideck-IV**.

12A.1.3 Class notation **Helideck-I** requires compliance with the requirements given in 12A.1, 12A.2, 12A.3 and 12A.4.

12A.1.4 Class notation **Helideck-II** requires compliance with the requirements given in 12A.5, in addition to the requirements for **Helideck-I**.

12A.1.5 Class notation **Helideck-III** requires compliance with the requirements given in 12A.6, in addition to the requirements for **Helideck-II**.

12A.1.6 Class notation **Helideck-IV** requires compliance with the requirements given in 12A.7, in addition to the requirements for **Helideck-III**.

12A.1.7 Details of the helicopter types to be used are to be included in the Loading Manual (See 3.1.2), and be contained in a notice displayed on the helicopter landing deck.

12A.1.8 The attention of owners, builders and designers is drawn to various international and governmental regulations and guides regarding the operational and other design requirements for helicopters landing on ships.

12A.1.9 Construction of helicopter decks

(a) Steel or other equivalent material

In general, the construction of the helicopter decks is to be of steel or other equivalent materials. If the helicopter deck forms the deckhead of a deckhouse or superstructure, is to be insulated to "A-60" class standard.

(b) Aluminium or other low melting point metals

If helicopter deck of aluminium or other low melting point metal construction that is not made equivalent to steel, the following provisions are to be satisfied:

(i) If the platform is cantilevered over the side of the ship, after each fire on the ship or on the platform, the platform is to undergo a structural analysis to determine its suitability for further use; and

(ii) If the platform is located above the ship's deckhouse or similar structure, the following conditions are to be satisfied:

(1) The deckhouse top and bulkheads under the platform are to have no openings;

(2) Windows under the platform are to be provided with steel shutters; and

(3) After each fire on the platform or in close proximity, the platform is to undergo a structural analysis to determine its suitability for further use.

12A.1.10 Definition

(a) Helicopter deck is a purpose built helicopter landing area located on a ship including all structure, fire-fighting appliances and other equipment necessary for the safe operation of helicopters.

(b) Helicopter facility is a helicopter deck including any refueling and hangar facilities.

(c) Helicopter landing area means an area on a ship designed for emergency landing of helicopters.

12A.2 Plans

12A.2.1 Plans showing the arrangement, scantlings, and details of the helicopter deck are to be submitted.

12A.2.2 The type, size and weight of helicopters to be used, the predetermined position used for accommodating the secured helicopter and the locations of deck fittings for securing the helicopter as well as the overall size of the helicopter deck and the designated landing area are to be shown.

12A.2.3 Where aluminium alloy platforms are connected to steel structures, details of the arrangements in way of the bimetallic connections are to be submitted.

12A.3 Structural Strength

12A.3.1 Steel decks

The deck plate thickness, t, within the landing area is to be not less than that obtained from the following formula:

$$t = \frac{\alpha s}{1000\sqrt{k}} + 1.5 \qquad \text{mm}$$

where:

α	=	Thickness coefficient, obtained from Fig. II 12A-1.
s	=	As shown in Fig. II 12A-1.
k	=	$\frac{235}{\sigma_0}$ or 0.66, whichever is the greater.
σ_0	=	Specific minimum yield stress, in N/mm^2.
β	=	Tyre print coefficient, used in Fig. II 12A-1.
	=	$\log_{10}\left(\frac{2.5\lambda_1\lambda_2\lambda_3\gamma f P_w k^2}{s^2} \times 10^7\right)$
f	=	1.15 for landing decks over manned spaces, e.g., deckhouse, bridges, control rooms, etc.;
	=	1.0 elsewhere.
P_w	=	Landing load, on the tyre print in tonnes;
	=	The maximum all up weight of the helicopter divided equally between the two main undercarriages for helicopter with a single main rotor, in ton.
	=	The maximum all up weight of the helicopter distributed between all main undercarriages in proportion to the static loads they carry for helicopter with tandem main rotors, in tones.
γ	=	A location factor given in Table II 12A-1.

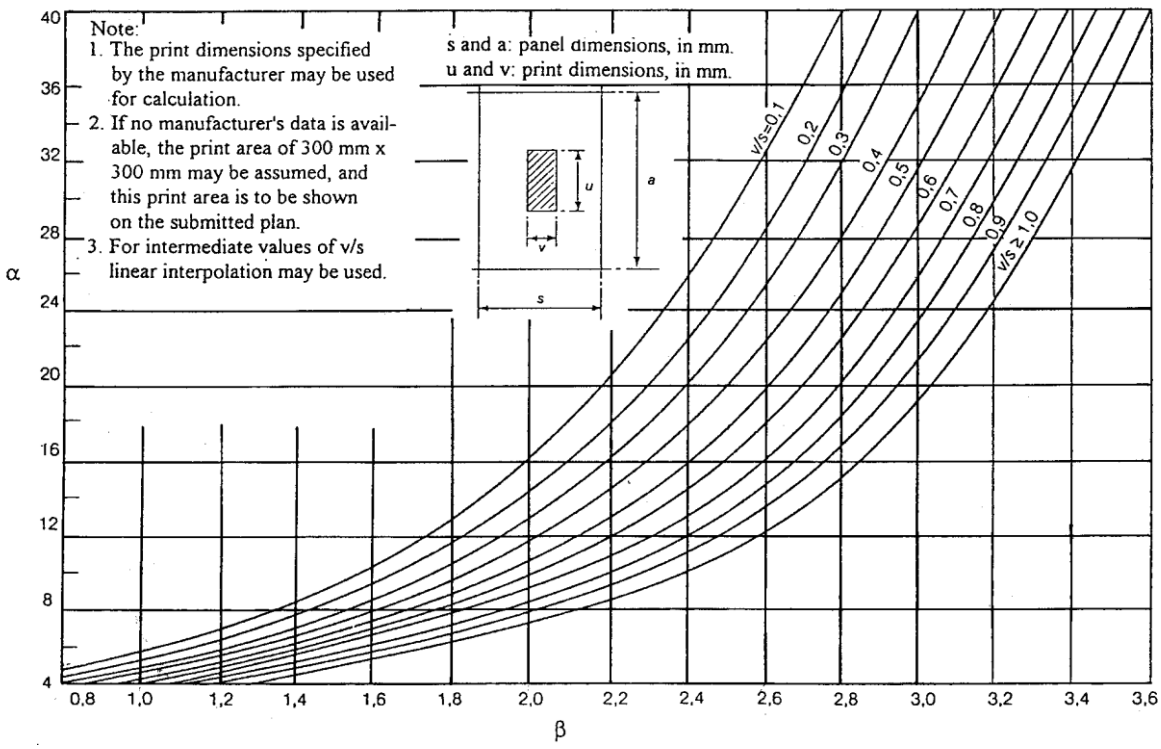

Fig. II 12A-1
Tyre Print Curves

Table II 12A-1
Location Factor

Location		γ
On decks forming part of the hull girder	within 0.4 L amidships	0.71
	at the F.P. or A.P.	0.6
Elsewhere		0.6
Note: Value for intermediate locations on decks forming part of the hull girder between ship ends and 0.4 L amidships are to be obtained by interpolation.		

where:

λ_1 = Patch aspect ratio correction factor;

$= \dfrac{2v + 1.1s}{u + 1.1s}$ for $v \le s$ and $u \le a$.

λ_2 = Panel aspect ratio correction factor;

$= 1.0$ for $u \le (a - s)$

$= \dfrac{s}{1.3s - 0.3(a - u)}$ for $a \ge u > (a - s)$

$= \dfrac{0.77a}{u}$ for $u > a$

λ_3 = Wide patch load factor;

$= 1.0$ for $v < s$

$= 0.6\dfrac{s}{v} + 0.4$ for $1.5 > \dfrac{v}{s} \ge 1.0$

$= 1.2\dfrac{s}{v}$ for $\dfrac{v}{s} \ge 1.5$

12A.3.2 Aluminium decks

(a) The plate thickness for aluminium decks, t_a is to be not less than that obtained from the following formula:

$t_a = 1.4\,t + 1.5$ mm

where:

t = The steel thickness defined in 12A.3.1.

(b) The air gap between the deckhouse top and the underside of the helicopter deck is to be at least 1 m.

(c) There are no openings in the deckhouse top and in the exterior bulkheads both directly below the helicopter decks.

(d) All windows in the lower exterior bulkheads are to be fitted with steel shutters.

12A.3.3 Deck stiffening and supporting structure

The helicopter deck stiffening and the supporting structure for helicopter platforms is to be designed on the basis of the following load cases given in Table II 12A-2 in association with the permissible stresses given in Table II 12A-3.

Table II 12A-2
Design Load Cases for Deck Stiffening and Supporting Structure

Load case	Loads			
	Supporting structure		Landing area(1)	
	Self weight	Horizontal load(2)	Uniformly distributed vertical load over entire landing area, in kN/m^2	Helicopter(2)
1. Overall distributed loading	–	–	2	–
2. Helicopter emergency landing	W	0.5 P	0.5	2.5 P_wf
3. Normal usage	W	0.5 P + 0.5 W	0.5	1.5 P_w

Notes:

(1) For the design of the supporting structure for helicopter platforms applicable self weight and horizontal loads are to be added to the landing area loads.

(2) The helicopter is to be so positioned as to produce the most severe loading condition for each structural member under consideration.

(3) f = As defined in 12A.3.1.
W = The structural weight of helicopter platform, in ton.
P = The maximum all up weight of the helicopter, in ton.
P_w = As defined in 12A.3.1.

Table II 12A-3
Permissible Stresses for Deck Stiffening and Supporting Structure

Load case (See Table II 12A-2)	Permissible stresses (N/mm^2)			
	Deck secondary structure (Beams, longitudinals)	Primary structure (transverses, girders, pillars, trusses)		All structure
	Bending		Combined bending and axial	Shear
1. Overall distributed loading	$\frac{147}{K}$	$\frac{147}{K}$	$0.6\ \sigma_c$	$\frac{\text{Bending stress}}{\sqrt{3}}$
2. Helicopter emergency landing	$\frac{245}{K}$	$\frac{220.5}{K}$	$0.9\ \sigma_c$	
3. Normal usage	$\frac{176}{K}$	$\frac{147}{K}$	$0.6\ \sigma_c$	

Notes:
(1) K = Material factor;
= k for steel (See 12A.3.1);
= Ka for aluminium alloy (See 12A.3.4).
(2) σ_c = Yield stress, 0.2% proof stress or compressive buckling stress, whichever is lesser, in N/mm^2.
(3) For strength deck longitudinals and girders the permissible bending stresses are to be reduced as follows:
(a) within 0.4 L of amidships- by 30%.
(b) at F.P. and F.P.- by 0%.
Values at intermediate locations are to be calculated by interpolation between (a) and (b).
(4) When determining bending stresses in secondary structure for compliance with the above permissible stresses, 100% end fixity may be assumed.

12A.3.4 The minimum moment of inertia, I, of aluminium secondary structure stiffening is to be not less than that obtained from the following formula:

$$I = \frac{5.25Zl}{K_a} \qquad cm^4$$

where:
Z = The required section modulus of the aluminium stiffener and the attached plating, in cm^3.
l = Effective length of the stiffening member measured between span points, in m.
K_a = $\frac{245}{\sigma_a}$
σ_a = Yield stress, 0.2% proof stress or 70% of the ultimate strength of the material, whichever is lesser, in N/mm^2.

12A.4 Arrangements

12A.4.1 The landing area is to be sufficiently large to allow for the landing and maneuvering of the helicopter.

(a) For helicopter landing areas located amidships, across ship obstacle free sectors of 210° is to be provided. These sectors is to originate at the most forward and aft points on the periphery of the "D" reference circle ("D" is the actual value of diameter in metres of the helicopter deck) and diverge at 15° forward and 15° aft relative to straight transverse lines.

(b) For location at ship's ends, a free approach and take-off sector of at least 210° is required.

(c) For any helicopter landing areas amidships located adjacent to the ship's side with one-sided approach, the obstacle free sector is to originate at the most forward and aft points on the periphery of the "D" reference circle and diverge to achieve 1.5 D at the ship's side.

12A.4.2 Suitable arrangements are to be made to minimize the risk of personnel or machinery sliding off the landing area.

12A.4.3 The helicopter deck is to have a non-slip surface.

12A.4.4 Tie-down points

(a) Helicopter decks are to have tie-down points for lashing of the helicopter. The tie-down points are not to protrude above the level of the helicopter deck.

(b) The breaking load of the tie-down points for helicopters calling at the shipship is to be confirmed from helicopter operator or manufacturer.

(c) Tie-down points located on helicopter decks are to be flush fitted.

12A.4.5 Means of escape

(a) A helicopter deck is to be provided with both a main and an emergency means of escape and access for fire fighting and rescue personnel. These are to be located as far apart from each other as is practicable and preferably on opposite sides of the helicopter deck.

12A.4.6 Drainage facilities

(a) Drainage facilities in way of helicopter decks are to be constructed of steel and are to lead directly overboard independent of any other system and are to be designed so that drainage does not fall onto any part of the ship.

12A.4.7 Fire-fighting appliances

(a) In close proximity to the helicopter deck, the following fire-fighting appliances are to be provided and stored near the means of access to that helicopter deck:

(i) at least two dry powder extinguishers having a total capacity of not less than 45 kg;

(ii) carbon dioxide extinguishers of a total capacity of not less than 18 kg or equivalent;

(iii) a suitable foam application systemm, with the requirements of IMO MSC.1/Circ.1431 consisting of monitors or foam making branch pipes capable of delivering foam to all parts of the helicopter deck in all weather conditions in which helicopters can operate. The system is to be capable of delivering a discharge rate as required in Table II 12A-4 for at least 5 minutes;

Table II 12A-4
Foam Discharge Rates

Category	Helicopter overall length	Discharge rate foam solution (*l*/min.)
H1	up to but not including 15m	250
H2	from 15m up to but not including 24m	500
H3	from 24m up to but not including 35m	800

(iv) the principal agent is to be suitable for use with salt water, and a type deemed as appropriate by the Society.

(v) at least two nozzles of an approved dual-purpose type (jet/spray) and hoses sufficient to reach any part of the helicopter deck.

(vi) in addition to the requirements of SOLAS Reg. II-2/10.10, two sets of fire-fighter's outfits; and

(vii) at least the following equipment is to be stored in a manner that provides for immediate use and protection from the elements:
(1) adjustable wrench;
(2) blanket, fire resistant;
(3) cutters, bolt 60 cm;
(4) hook, grab or salving;
(5) hacksaw, heavy duty complete with 6 spare blades;
(6) ladder;
(7) lift line 5 mm diameter × 15 m in length;
(8) pliers, side cutting;
(9) set of assorted screwdrivers; and
(10) harness knife complete with sheath.

12A.5 Additional Requirements for Helideck-II

12A.5.1 Communication

(a) Helicopter and shipship shall communicate through a VHF installation, maritime or aeromobile.

(b) A portable VHF apparatus with earphones is to be available. Three-way communication between helicopter, helicopter deck and bridge is to be possible.

12A.6 Additional Requirements for Helideck-III

12A.6.1 Marking of helicopter deck

(a) Obstacles, which the helicopter operator should be especially aware of, are to be painted in diagonal stripes of contrasting colors.

(b) The perimeter of the helicopter deck is to be marked with a 300 mm white line. The preferred colour of deck within perimeter line is dark grey or dark green.

(c) The name of the ship is to be marked on the helicopter deck surface between the origin of the obstacle-free sector and the aiming circle in symbols not less than 1200 mm high and in a colour which contrasts to the helicopter deck surface.

(d) Obstacle-free sector is to be marked on the helicopter deck by a black chevron, each leg being 790 mm long and 100 mm wide. The chevron is to delineate the separation of the 210º obstacle-free sector and the 150º limited obstacle sector.

(e) The actual D-value of the helicopter deck is to be painted in white colour around the perimeter of the helicopter deck with symbol of 600 mm height and rounded down to the nearest whole number.

(f) The maximum allowable mass is to be marked on the helicopter deck in a position that is readable from the preferred final approach direction and consist of a two-or three-digit number expressed to one decimal place rounded to the nearest 100kg and followed by the letter "t". The height of the numbers is to be 900 mm with a line width of 120 mm.

(g) An aiming circle, which is to be a 1000 mm yellow line with inner diameter 0.5D.

(h) A letter "H" is to be painted 4 × 3 m of 750 mm white lines located in the centre of the aiming circle.

(i) A signal flag to alert approaching helicopters that landing is prohibited in case the helicopter deck for technical reasons can not be used is to be carried onboard. This shall be a red flag 4000 × 4000 mm with yellow diagonal cross that can be laid above the "H" inside of the aiming circle.

12A.6.2 Height of obstacles

(a) The landing area is to be as flush as possible to avoid damage on skids, wheels or pontoons.

(b) Steel or other solid construction at perimeter may extend 50 mm above deck level.

(c) In the approach sector, on and outside of perimeter, only aids essential to helicopter operations are allowed to extend up to a maximum height of 250 mm, e.g. landing lights, floodlights, foam monitors, outer edge of safety net and similar arrangements.

(d) In bow or stern located helicopter landing areas, outside the obstacle free sector, obstacle heights is to be limited to 0.05 D to a distance 0.62 D from the centre of the landing area and thence are required to be below a rising plane of 1:2 to a distance of 0.83 D from the centre of the landing area.

(e) Forward and aft of the approach sector of a flight channel across the ship, within a length equal to helicopter overall length forward and aft of sector, obstacles are required to be below a plane with 1:5 longitudinal inclination.

(f) For helicopter landing areas located adjacent to the ship's side, outside the obstacle free sector, obstacles is to be limited to a height of 0.05 D for a distance of 0.25 D from the edge of the obstacle free sector and the landing area.

12A.6.3 Wind direction indicator is to be provided so as to indicate the clear area wind condition representative for the helicopter deck.

12A.6.4 Special requirements for night operation

(a) Floodlights are to be arranged for illumination of the total landing area, with care not to dazzle the pilot.

(b) Green lights are to be fitted on the perimeter line, maximum 3m apart. The intensity of lighting is to be 30 candela. The lighting is not to be visible below the helicopter deck level.

(c) Floodlights, perimeter lights, and obstruction lights are to have electric power fed from emergency and transitional source of power in compliance with the requirements in Chapter 11, Part VII of the Rules. The transitional power is to last for at least 30 min. The system is also to have a supply circuit from main power so that a single failure in either the main electric power distribution system or the emergency power distribution system is not to render the helicopter deck lighting inoperable. Floodlights, perimeter lights, and obstruction lights are to have individual protected distribution circuits.

(d) The wind indicator is to be illuminated.

(e) All obstacles, which may obstruct the landing approach are to be indicated by red obstruction lights visible from all directions, or floodlighting or a combination of both.

12A.6.5 Instrumentation

(a) Wind velocity and direction, barometric pressure, ship's roll and pitch are to be recorded and communicated to helicopter before landing. Simple instruments for this purpose are to be available.

12A.7 Additional Requirements for Helideck-IV

12A.7.1 Helicopter refueling and hangar facilities

The class notation **Helideck-IV** requires the ship having helicopter refueling and hangar facilities in compliance with the following requirements:

(a) A designated area is to be provided for the storage of fuel tanks which is to be:

(i) as remote as is practicable from accommodation spaces, escape routes and embarkation stations; and

(ii) isolated from areas containing a source of vapour ignition;

(b) The fuel storage area is to be provided with arrangements whereby fuel spillage may be collected and drained to a safe location;

(c) Tanks and associated equipment are to be protected against physical damage and from a fire in an adjacent space or area;

(d) Where portable fuel storage tanks are used, special attention is to be given to:
(i) design of the tank for its intended purpose;
(ii) mounting and securing arrangements;
(iii) electric bonding; and
(iv) inspection procedures;

(e) Storage tank fuel pumps are to be provided with means which permit shutdown from a safe remote location in the event of a fire. Where a gravity fuelling system is installed, equivalent closing arrangements are to be provided to isolate the fuel source;

(f) The fuel pumping unit is to be connected to one tank at a time. The piping between the tank and the pumping unit is to be of steel or equivalent material, as short as possible, and protected against damage;

(g) Electrical fuel pumping units and associated control equipment are to be of a type suitable for the location and potential hazards;

(h) Fuel pumping units are to incorporate a device which will prevent over-pressurization of the delivery or filling hose;

(i) Equipment used in refueling operations is to be electrically bonded;

(j) "NO SMOKING" signs are to be displayed at appropriate locations;

(k) Hangar, refueling and maintenance facilities are to be treated as category ‘A’ machinery spaces with regard to structural fire protection, fixed fire-extinguishing and detection system requirements;

(l) Enclosed hangar facilities or enclosed spaces containing refueling installations are to be provided with mechanical ventilation, as required by 13.3.2, Part IX of the Rules, for closed ro/ro spaces of cargo ships. Ventilation fans are to be of non-sparking type; and

(m) Electric equipment and wiring in enclosed hangar or enclosed spaces containing refueling installations are to comply with 13.3.2, Part IX of the Rules.

Chapter 13

Bulwarks, Freeing Ports, Side Scuttles, Shell Doors and Gangways

13.1 Bulwarks and Guardrails

13.1.1 Guard rails or bulwarks are to be fitted around all exposed decks. The height of the bulwarks or guard rails is to be at least 1 m from the deck, provided that where this height would interfere with the normal operation of the ship, a lesser height may be approved, if complying with the requirements of the Administration and the Society is satisfied that adequate protection is provided.

13.1.2 Bulwark constructions

(a) Bulwarks are to be of ample strength in proportion to the height and stiffened at the upper edge and supported by the stay from the deck. Bulwarks are not to be cut for a gangway or other openings near breaks of superstructures, and also to be arranged to ensure their freedom from main structural stresses. Generally the bulwark is not to be welded to the top of sheer strake within 0.5L amidships.

(b) Thickness of plate bulwarks
   (i) The thickness of plate bulwarks of ordinary height on the freeboard deck is generally not to be less than 6 mm.
   (ii) Bulwarks in way of the mooring pipe, cargo gear fittings, deck cargo lashing fittings, etc., the plating is to be suitably increased or doubled and adequate stiffened.
   (iii) The thickness of plate bulwarks at the break of the superstructure is to be modified in accordance with 7.5 of this Part.

(c) Bulwark stays
   (i) Stays on bulwarks are not to be spaced more than 1.8 m apart.
   (ii) Stays on bulwarks which are designed to subject timber deck cargoes is not to be spaced more than 1.5 m apart.

13.1.3 Guard rails fitted on superstructure and freeboard decks are to have at least three courses. The opening below the lowest course of the guard rails is to not exceed 230 mm. The other courses are to be not more than 380 mm apart. In the case of ships with rounded gunwales the guard rail supports are to be placed on the flat of the deck. In other locations, guardrails with at least two courses are to be fitted. Guard rails are to comply with the following provisions:

(a) Fixed, removable or hinged stanchions are to be fitted about 1.5 m apart. Removable or hinged stanchions are to be capable of being locked in the upright position;

(b) At least every third stanchion is to be supported by a bracket or stay;

(c) Where necessary for the normal operation of the ship, steel wire ropes may be accepted in lieu of guard rails. Wires are to be made taut by means of turnbuckles; and

(d) Where necessary for the normal operation of the ship, chains fitted between two fixed stanchions and/or bulwarks are acceptable in lieu of guard rails.

13.1.4 A bracket type is recommended for the lower connections of bulwark stays (See Fig. II 13-1 as below). In cases where a gusset type is applied for the lower connections of bulwark stays (See Fig. II 13-1 as below), special consideration is to be given.

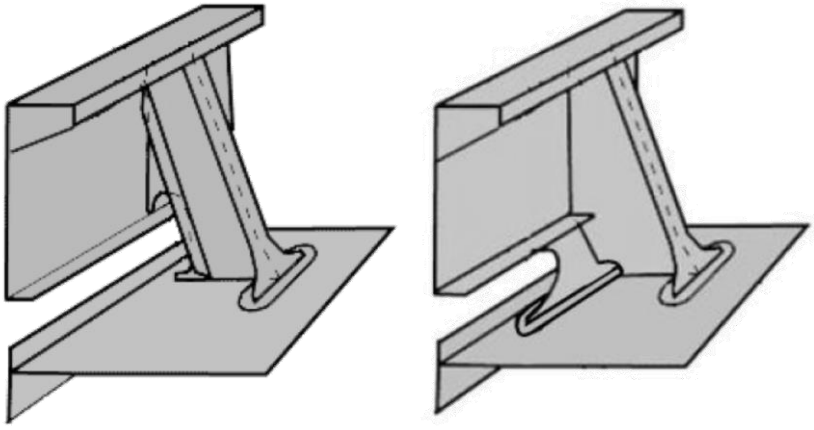

Fig. II 13-1
Example of Bracket Type (Left) and Example of Gusset Type (Right)

13.1.5 In cases where a bracket type is applied for the lower connections of bulwark stays, the bulwark stays are to be properly stiffened for the prevention of local buckling.

13.1.6 Expansion joints are to be provided at appropriate intervals in bulwarks.

13.1.7 The plating of bulwarks in way of mooring pipes is to be doubled or increased in thickness.

13.1.8 At ends of superstructures, the bulwark rails are to be bracketed either to the superstructure end bulkheads or to the stringer plates of the superstructure decks; or other equivalent arrangements are to be made so that an abrupt change of strength may be avoided.

13.1.9 Where bulwarks are cut to form gangways or other openings, stays of increased strength are to be provided atthe ends of the openings.

13.2 Freeing Ports

13.2.1 Freeing ports

(a) Where bulwarks on the weather portions of freeboard or superstructure decks form wells, ample provision is to be made for rapidly freeing the decks of water and for draining them.

(b) Except as provided in paragraphs 13.2.1(c) and 13.2.2, the minimum freeing port area (A) on each side of the ship for each well on the freeboard deck is to be that given by the following formulae in cases where the sheer in way of the well is standard or greater than standard.

The minimum area for each well on superstructure decks is to be one-half of the area given by the following formulae:

Where the length of bulwark (l) in the well is 20 m or less:

$$A = 0.7+0.035l \quad m^2$$

where l exceeds 20 m:

$$A = 0.07l \quad m^2$$

l need in no case be taken as greater than $0.7L_f$.

If the bulwark is more than 1.2 m in average height, the required area is to be increased by 0.004 m^2 per metre of length of well for each 0.1 m difference in height. If the bulwark is less than 0.9 m in average height, the required area may be decreased by 0.004 m^2 per m of length of well for each 0.1 m difference in height.

(c) In ships with no sheer, the area calculated according to 13.2.1(b) is to be increased by 50%. Where the sheer is less than the standard, the percentage is to be obtained by linear interpolation.

(d) On a flush deck ship with a deckhouse amidships having a breadth at least 80% of the beam of the ship and the passageways along the side of the ship not exceeding 1.5 m in width, two wells are formed. Each is to be given the required freeing port area based upon the length of each well.

(e) Where a screen bulkhead is fitted completely across the ship at the forward end of a midship deckhouse, the exposed deck is divided into tow wells and there is no limitation on the breadth of the deckhouse.

(f) Wells on raised quarterdecks are to be treated as being on freeboard decks.

13.2.2 Where a ship fitted with a trunk, open rails are not fitted on the weather part of the free board deck in way of the trunk at least half their length or where continuous or substantially continuous hatchway side coamings are fitted between detached superstructures, the minimum area of the freeing port openings is to be calculated from the following table:

Breadth of hatchway or trunk in relation to the breadth of ship	Area of freeing ports in relation to the total area of the bulwarks
40% or less	20%
75% or more	10%

The area of freeing ports at intermediate breadths is to be obtained by linear interpolation.

13.2.3 The effectiveness of the freeing area in bulwarks required by paragraph 13.2.1 above depends on the free flow area across the deck of a ship. Where there is no free flow due to the presence of a continuous trunk or hatchway coaming, the freeing area in bulwarks is calculated in accordance with 13.2.2 above. The free flow area on deck is the net area of gaps between hatchways, and between hatchways and superstructures and deckhouses up to the actual height of the bulwark.

The freeing port area in bulwarks is to be assessed in relation to the net free flow area as follows:

(a) If the free flow area is not less than the freeing area calculated from 13.2.2 as if the hatchway coamings were continuous, then the minimum freeing port area calculated from 13.2.1 is to be deemed sufficient.

(b) If the free flow area is equal to, or less than the area calculated from 13.2.1, the minimum freeing area in the bulwarks is to be determined from 13.2.2.

(c) If the free flow area is smaller than calculated from 13.2.2,but greater than calculated from 13.3.1, the minimum freeing area in the bulwark is to be determined from the following formula:

$$F = F_1+F_2-F_p \quad m^2$$

where:

F_1 = The minimum freeing area calculated from 13.2.1;
F_2 = The minimum freeing area calculated from 13.2.2; and
F_p = The total net area of passages and gaps between hatch ends and superstructures or deckhouse up to the actual height of bulwark.

13.2.4 In ships having superstructures on the freeboard deck or superstructure decks, which are open at either or both ends to wells formed by bulwarks on the open decks, adequate provision for freeing the open spaces within the superstructures is to be provided. The minimum freeing port area on each side of the ship for the open superstructure (A_s) and for the open well (A_w), is to be calculated in accordance with the following procedure:

(a) Determine the total well length (l_t) equal to the sum of the length of the open deck enclosed by bulwarks (l_w) and the length of the common space within the open superstructure (l_s).

(b) To determine A_s:

(i) Calculate the freeing port area (A) required for an open well of length l_t in accordance with 13.2.1 with standard height bulwark assumed;

(ii) Multiply by a factor of 1.5 to correct for the absence of sheer, if applicable, in accordance with 13.2.1.

(iii) Multiply by the factor (b_o/l_t) to adjust the freeing port area for the breadth (b_o) of the openings in the end bulkhead of the enclosed superstructure;

(iv) To adjust the freeing port area for that part of the entire length of the well which is enclosed by the open superstructure, multiply by the factor:

$1-(l_w/l_t)^2$

where:
l_w and l_t = as defined in 13.2.4(a).

(v) To adjust the freeing port area for the distance of the well deck above the freeboard deck, for decks located more than $0.5h_s$ above the freeboard deck, multiply by the factor:

$0.5(h_s/h_w)$

where:
h_w = The distance of the well deck above the freeboard deck.
h_s = One standard superstructure height.

(c) To determine A_w:

(i) The freeing port area for the open well (A_w) is to be calculated in accordance with 13.2.4(b)(i), using l_w to calculate a nominal freeing port area (A'), and then adjusted for the actual height of the bulwark (h_b) by the application of one of the following area corrections, whichever is applicable:

for bulwarks greater than 1.2 m in height:

$A_c = l_w((h_b-1.2)/0.10)(0.004)$ m^2

for bulwarks less than 0.9 m in height:

$A_c = l_w((h_b-0.9)/0.10)(0.004)$ m^2

for bulwarks between 1.2 m and 0.9 m in height there is no correction (i.e. $A_c=0$);

(ii) The corrected freeing port area ($A_w=A'+A_c$) is to then be adjusted for absence of sheer, if applicable, and height above freeboard deck as in 13.2.4(b)(ii) and (b)(v), using h_s and h_w.

(d) The resulting freeing port areas for the open superstructure (A_s) and for open well (A_w) are to provided along each side of the open space covered by the open superstructure and each side of the open well, respectively.

(e) The above relationships are summarized by the following equations, assuming l_t, the sum of l_w and l_s is greater than 20 m:

freeing port area A_w for the open well:

$A_w = (0.07l_w+A_c)(\text{sheer correction})(0.5h_s/h_w)$;

freeing port area A_s for the open superstructure:

$A_s = (0.07l_t)(\text{sheer correction})\{b_o/l_t[1-(l_w/l_t)^2]\}(0.5h_s/h_w)$;

Where l_t is 20 m or less, the basic freeing port area is $A=0.7+0.035l_t$ in accordance with 13.2.1.

13.2.5 On ships with continuous longitudinal hatch coamings, where water may accumulate between the transverse coamings, freeing ports shall be provided at both sides, with a minimum section area in m^2:

$A_q = 0.07\ b_Q$

where:
b_Q = breadth of transverse box girder in m.

In case of a partial closed structures the area A_q may be reduced by the ratio of clear opening of the transverse hatch coaming and the total area of enclosed space.

13.2.6 The lower edges of freeing ports are to be as near the deck as practicable. Two-thirds of the freeing port area required is to be provided in the half of the well nearest the lowest point of the sheer curve. One third of the freeing port area required is to be evenly spread along the remaining length of the well. With zero or little sheer on the exposed freeboard deck or an exposed superstructure deck the freeing port area is to be evenly spread along the length of the well.

13.2.7 All freeing port openings in the bulwarks are to be protected by rails or bars spaced approximately 230 mm apart. If shutters are fitted to freeing ports, ample clearance is to be provided to prevent jamming. Hinges are to have pins or bearings of non-corrodible material. Shutters are not to be fitted with securing appliances.

13.3 Side Scuttles, Windows and Skylights

13.3.1 Side scuttles and windows, together with their glasses, deadlights and storm coves, if fitted, are to be of an approved design and substantial construction. Non-metallic frames are not acceptable. See also Part XI, Chapters 17 and Chapter 18 of the Rules for Steel Ships.

13.3.2 Side scuttles are defined as being round or oval openings with an area not exceeding 0.16 m^2. Round or oval openings having areas exceeding 0.16 m^2 are to be treated as windows.

13.3.3 Windows are defined as being rectangular openings generally, having a radius at each corner relative to the window size and round or oval openings with an area exceeding 0.16 m^2.

13.3.4 Side scuttles to the following spaces are to be fitted with the following hinged inside deadlights which are to be capable of being closed and secured watertight if fitted below the freeboard deck and weathertight if fitted above:

(a) spaces below freeboard deck;

(b) spaces within the first tier of enclosed superstructures; and

(c) first tier deckhouses on the freeboard deck protecting openings leading below or considered buoyant in stability calculations

13.3.5 Side scuttles are not to be fitted in such a position that their sills are below a line drawn parallel to the freeboard deck at side and having its lowest point 2.5% of the breadth (B_f), or 500 mm, whichever is the greatest distance, above the Summer Load Line (or Timber Summer Load Line if assigned).

13.3.6 If the required damage stability calculations indicate that the side scuttles would become immersed at any intermediate stage of flooding or the final equilibrium waterline, they are to be of the non-opening type.

13.3.7 Windows are not to be fitted in the following locations:

(a) below the freeboard deck;

(b) in the first tier end bulkheads or sides of enclosed superstructures; or

(c) in first tier deckhouses that are considered buoyant in the stability calculations.

13.3.8 Side scuttles and windows at the side shell in the second tier are to be provided with hinged inside deadlights capable of being closed and secured weathertight if with hinged inside deadlights capable of being closed and secured weathertight if the superstructure protects direct access to an opening leading below or is considered buoyant in the stability calculations.

13.3.9 Side scuttles and windows in side bulkheads set inboard from the side shell in the second tier which protect direct access below to spaces listed in 13.3.4 are to be provided with either hinged inside deadlights or, where they are accessible, permanently attached external storm covers which are capable of being closed and secured weathertight.

13.3.10 Cabin bulkheads and doors in the second tier and above separating side scuttles and windows from a direct access leading below or the second tier considered buoyant in the stability calculations may be accepted in place of deadlights or storm covers fitted to the side scuttles and windows.

13.3.11 Deckhouses situated on a raised quarter deck or on the deck of a superstructure of less than standard height may be regarded as being in the second tier as far as the requirements for deadlights are concerned, provided that the height of the raised quarter deck or superstructure is equal to or greater than the standard quarter deck height.

13.3.12 Fixed or opening skylights are to have a glass thickness appropriate to their size and position as required for side scuttles and windows. Skylight glasses in any position are to be protected from mechanical damage and, where fitted in position 1 or 2, are to be provided with permanently attached deadlights or storm covers.

13.4 Means of Embarkation and Disembarkation

13.4.1 Ships are to be provided with appropriate means of embarkation on and disembarkation from ships for use in port and in port related operations, such as gangways and accommodation ladders.

13.4.2 Where a ship is engaged in voyages between designated ports where appropriate shore accommodation / embarkation ladders (platforms) are provided, special approval may be made by the Society.

13.4.3 the means of embarkation and disembarkation are to be in accordance with the following.

(a) Accommodation ladders and gangways are to be constructed based on ISO 5488:1979 "Shipbuilding - accommodation ladders", ISO 7061:1993 "Shipbuilding - aluminium shore gangways for seagoing ships" or standards where deemed appropriate by the Society. Accommodation ladder winches are to be constructed based on ISO 7364:1983 "Shipbuilding and marine structures – deck machinery – accommodation ladder winches" or standards where deemed appropriate by the Society or are to be the one pursuant to aforementioned standards.

(b) The structure of the accommodation ladders and gangways and their fittings and attachments are to be such as to allow regular inspection, maintenance of all parts and, if necessary, lubrication of their pivot pin. Special care is to be paid to welding connection.

(c) As far as practicable, the means of embarkation and disembarkation are to be sited clear of the working area and are not to be placed where cargo or other suspended loads may pass overhead. However, in cases where the Society recognizes unavoidable circumstances, the means of embarkation and disembarkation may be installed within the above mentioned areas or places, provided that safe passage is ensured through description in operation manuals, the installation of warning plates, and so on.

(d) Each accommodation ladder is to be of such a length to ensure that, at a maximum design operating angle of inclination, the lowest platform will be not more than 600 mm above the waterline in the lightest seagoing condition (in this regard, trim is to be the condition resulting from the loading condition of the lightest seagoing condition), as defined in SOLAS Regulation III/3.13. However, in cases where the height of the embarkation / disembarkation deck exceeds 20 m above the waterline or is deemed appropriate by the Society, an alternative means of providing safe access to the ship or supplementary means of access to the bottom platform of the accommodation ladder may be accepted.

(e) The arrangement at the head of the accommodation ladder is to provide direct access between the ladder and the ship’s deck by a platform securely guarded by handrails and handholds. The ladder is to be securely attached to the ship to prevent overturning.

(f) Each accommodation ladder or gangway is to be clearly marked at each end with a plate showing the restrictions on the safe operation and loading, including the maximum and minimum permitted design angles of inclination, design load, maximum load on bottom end plate, etc. Where the maximum operational load is less than the design load, it is also to be shown on the marking plate.

(g) Gangways are not to be used at an angle of inclination greater than 30 degrees from the horizontal and accommodation ladders are not to be used at an angle greater than 55 degrees from the horizontal, unless designed and constructed for use at angles greater than these and marked as such.

(h) Gangways are not to be secured to a ship's guardrails unless they have been designed for that purpose. If positioned through an open section of bulwark or railings, any remaining gaps are to be adequately fenced.

(i) Adequate lighting is to be provided to illuminate the means of embarkation and disembarkation, the position on deck where persons embark or disembark and the controls of the arrangement.

(j) A lifebuoy equipped with a self-igniting light and a buoyant lifeline is to be available for immediate use in the vicinity of the embarkation and disembarkation arrangement when in use.

(k) A safety net is to be mounted and arrangements that enable the installation of such net are to be provided to prevent falling accident in cases where it is possible that a person may fall from the means of embarkation and disembarkation or between the ship and quayside.

13.4.4 Ships that have small freeboards and are provided with boarding ramps needs not to be in accordance with the requirements of 13.4.3.

Chapter 14
Watertight Bulkheads

14.1 General

14.1.1 Collision Bulkhead

(a) A collision bulkhead is to be fitted which is to be watertight up to the bulkhead deck. This bulkhead is to be located at a distance from the forward perpendicular of not less than $0.05L_f$ (L_f is defined in 1.2.10 of this Part)or 10 m, whichever is the less, and, except as may be permitted by the Society, not more than $0.08L_f$ or $0.05L_f$ + 3 m, whichever is the greater. Where any part of the ship below the waterline at 85% of the least moulded depth extends forward of the forward perpendicular of the length for freeboard, e.g., a bulbous bow, the above-mentioned distance is to be measured from the point either:

(i) at the mid-length of such extension;

(ii) at a distance $0.015L_f$ forward of the forward perpendicular; or

(iii) at a distance 3.0 m forward of the forward perpendicular,

whichever gives the smallest measurement.

(b) The bulkhead may have steps or recesses provided they are within the limits prescribed in (a).

(c) No doors, manholes, access openings, ventilation ducts or any other openings are to be fitted in the collision bulkhead below the bulkhead deck. Where a collision bulkhead extends up to a deck above the freeboard deck in accordance with the requirements of 14.1.5(b), the number of openings in the extension of the collision bulkhead is to be kept to a necessary minimum and all such openings are to be provided with weathertight means of closing.

(d) The collision bulkhead arrangement in a ship provided with bow doors is to be at the discretion of the Society. Where a sloping ramp forms a part of the collision bulkhead above the bulkhead, the part of the ramp which is more than 2.3 m above the bulkhead deck may extend forward of the limit specified in (a) above. In this case, the ramp is to be weathertight over its complete length. However, ramps not meet the above requirement are to be disregarded as an extension of the collision bulkhead.

(e) Notwithstanding the requirements in (c), the collision bulkhead may be pierced below the bulkhead deck by not more than one pipe for dealing with fluid in the forepeak tank, provided that the pipe is fitted with a screw-down valve capable of being operated from above the bulkhead deck, the valve chest being secured inside the forepeak to the collision bulkhead. The Society may, however, agree the fitting of this valve on the after side of the collision bulkhead provided that the valve is readily accessible under all service conditions and the space in which it is located is not a cargo space. All valves shall be of steel, bronze or other approved ductile material. Valves of ordinary cast iron or similar material are not acceptable.

14.1.2 After Peak Bulkhead

(a) Ships are to have an after peak bulkhead.

(b) The stern tube is to be enclosed in a watertight compartment by the after peak bulkhead or other arrangements.

14.1.3 At each end of the machinery space, a watertight bulkhead is to be provided.

14.1.4 Hold Bulkheads

(a) Ships of an ordinary type are to have hold bulkheads in addition to the bulkheads specified in 14.1.1 to 14.1.3 at reasonable intervals. The total number of watertight bulkheads may not be less than that given by Table II 14-1.

Table II 14-1
Total Number of Watertight Bulkheads

Length of ship, L, in m	Total number of bulkheads
67 ≤ L < 87	4
87 ≤ L < 102	5
102 ≤ L < 123	6
123 ≤ L < 143	7
143 ≤ L < 165	8
165 ≤ L < 186	9
186 ≤ L	Approved by the Society

(b) Where it is impracticable to adhere to the number of hold bulkheads required above, an alternative arrangement may be accepted subject to the approval by the Society.

14.1.5 Height of Watertight Bulkheads

The watertight bulkheads required in 14.1.1 to 14.1.4 are to extend to the freeboard deck with the following exceptions.

(a) A watertight bulkhead in way of the raised quarter or the sunken forecastle deck is to extend up to the captioned deck.

(b) Where a forward superstructure having openings without closing appliances leads to a space below the freeboard deck, or a long forward superstructure is provided, the collision bulkhead is to extend up to the superstructure deck and to be weathertight. However, where the extension is located within the limits specified in 14.1.1 and the part of the deck which forms the step is made effectively weathertight, it need not be fitted directly above the collision bulkhead.

(c) The aft peak bulkhead may terminate at a deck above the designed maximum load line provided that this deck is watertight to the stern of the ship.

14.1.6 Transverse Strength of Hull

(a) Where the watertight bulkheads required in 14.1.1 to 14.1.5 are not extended up to the strength deck, deep webs or partial bulkheads situated immediately or nearly above the main watertight bulkheads are to be provided so as to maintain the transverse strength and stiffness of the hull.

(b) Where the length of a hold exceeds 30 meters, suitable means are to be provided so as to maintain the transverse strength and stiffness of the hull.

14.2 Construction of Watertight Bulkheads

14.2.1 The thickness of bulkhead plating is not to be less than that obtained from the following formula:

$$3.2S\sqrt{Kh} + 2.5 \quad \text{mm}$$

where:

K	=	Material factor as specified in 1.5.2(a) of this Part.
S	=	Spacing of stiffeners, in m.
h	=	Vertical distance, in m, measured from the lower edge of the bulkhead plate to the bulkhead deck at the centre line of ship. It is not to be less than 3.4 meters.

14.2.2 Increase in Thickness of Plates of Special Parts

(a) The thickness of the lowest strake of bulkhead plating is to be at least 1.0 mm thicker than that obtained from the formula in 14.2.1.

(b) The lowest strake of bulkhead plating is to extend at least 610 mm above the top of the inner bottom plating in way of double bottom or 915 mm above the top of keel in way of single bottom. Where the double bottom is provided only on one side of the bulkhead, the extension of the lowest strake is to be up to the higher of the two heights given in the preceding sentence.

(c) The bulkhead plating in the limber is to be at least 2.5 mm thicker than that given in 14.2.1.

(d) The bulkhead plating is to be doubled or increased in thickness in way of the stern tube opening or propelling shaft opening, notwithstanding the requirements in 14.2.1.

14.2.3 The section modulus of bulkhead stiffeners is not to be less than that obtained from the following formula:

$2.8KCSh\,l^2$ cm^3

where:

K	=	Material factor as specified in 1.5.2(a) of this Part.
l	=	Span, in m, measured between the adjacent supports of stiffeners including the length of connection. Where girders are provided, l is the distance from the heel of the end connection to the first girder or the distance between the girders.
S	=	Breadth, in m, of the area supported by the stiffener.
h	=	Vertical distance, in m, measured from the mid-point of l for vertical stiffeners, and from the mid-point of S for horizontal stiffeners, to the top of the bulkhead deck at the centre line of the ship. Where the vertical distance is less than 6.0 meters, h is to be taken as 1.2 meters greater than 0.8 times the vertical distance.
C	=	Coefficient given in Table II 14-2, according to the type of end connections.

14.2.4 Corrugated Bulkheads

(a) The plate thickness of corrugated bulkheads is not to be less than that obtained from the following formula:

$3.4CS_1\sqrt{Kh} + 2.5$ mm, but not to be less than $5.9CS_1 + 2.5$ mm

where:

K	=	Material factor as specified in 1.5.2(a) of this Part.
h	=	As specified in 14.2.1.
S_1	=	Breadth, in m, of face part or web part indicated as a or b, respectively, in Fig. II 14-2 of this Chapter.
C	=	$\frac{1.5}{\sqrt{1+(t_w/t_f)^2}}$ for face part
	=	1.0 for web part
t_w	=	Thickness, in mm, of plates of web.
t_f	=	Thickness, in mm, of plates of face.

(b) The actual section modulus per half pitch of corrugated bulkheads is to be greater than that obtained from the following formula:

$3.6KSh\,l^2$ cm^3

where:

K	=	Material factor as specified in 1.5.2(a) of this Part.
S	=	Half pitch length, in m, of the corrugation (See Fig. II 14-2).
h	=	As specified in 14.2.3.
l	=	Length, in m, between the supports, as indicated in Fig. II 14-3.
C	=	Coefficient given in Table II 14-3, according to the type of end connection.

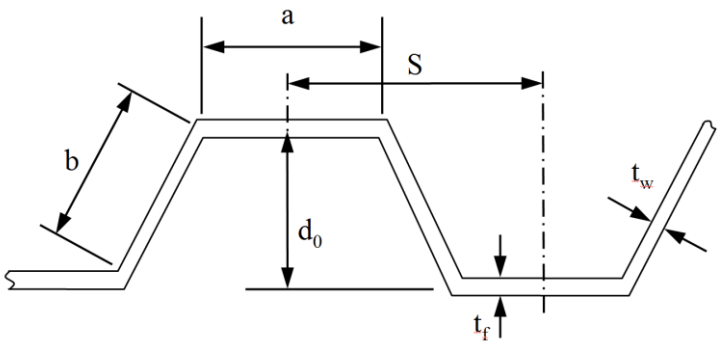

Fig II 14-2
Measurement of S

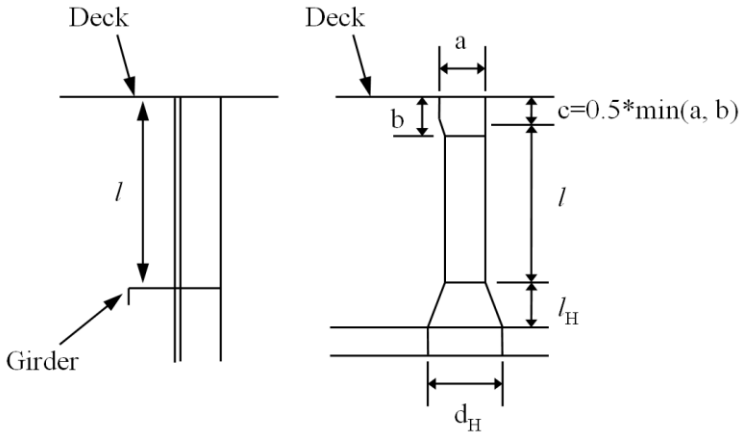

Fig II 14-3
Measurement of *l*

(c) Where the end connection of corrugated bulkheads is remarkably effective, the value of C specified in (b) may be adequately reduced.

(d) The thickness of plates at end parts for 0.2*l* in line with *l* is not to be less than that obtained from the following formulae respectively:

Web part:

$$\frac{CKShl}{24d_0} + 2.5 \qquad \text{mm}$$

The web thickness is not to be less than that obtained from the following formula:

$$\sqrt[3]{\frac{CShlb^2}{0.19 \cdot d_0}} + 2.5 \qquad \text{mm}$$

Face part, except the upper end part of vertically corrugated bulkheads:

$$\frac{12a}{\sqrt{K}} + 2.5 \qquad \text{mm}$$

where:

K, S, h, *l* and d_0	=	As specified in (b).
a and b	=	Breadth, in m, of face part and web part, respectively.
C	=	Coefficient given in Table II 14-4. Where the vertically corrugated bulkheads are constructed with a single span, the value of C may be taken as the value for the uppermost span in the Table.

(e) The thickness of the plates specified in (a) and (d) is to be in accordance with 14.2.2.

(f) The actual section modulus per half pitch of corrugated bulkheads is to be calculated using the following formula:

$$167 \cdot (3at_f d_0 + bt_w d_0) \qquad cm^3$$

where:

a and b	=	Breadth, in m, of face part and web part, respectively.
t_f and t_w	=	Thickness, in mm, of plates of face part and web part, respectively.
d_0	=	Depth, in m, of corrugation.

14.2.5 For collision bulkheads, the plate thickness and section modulus of stiffeners are not to be less than that those specified in 14.2.1 and 14.2.3 or 14.2.4 taking h as 1.25 times the specified height.

14.2.6 Girders Supporting Bulkhead Stiffeners

(a) The section modulus of girders is to be greater than that obtained from the following formula:

$$4.75KSh\mathit{l}^2 \qquad cm^3$$

where:

K	=	Material factor as specified in 1.5.2(a) of this Part.
S	=	Breadth, in m, of the area supported by the girder.
h	=	Vertical distance, in m, measured from the mid-point of *l* for vertical girders, and from the mid-point of S for horizontal girders, to the top of the bulkhead deck at the centre line of the ship. Where the vertical distance is less than 6.0 metres, h is to be taken as 1.2 meters greater than 0.8 times the vertical distance.
l	=	Span, in m, measured between the adjacent supports of girders *l* may be modified in accordance with 1.9 of this Part.

(b) The moment of inertia of girders is not to be less than that obtained from the following formula. The depth of girders is not to be less than 2.5 times the depth of slots for stiffeners.

$$10h\mathit{l}^4 \qquad cm^4$$

where:

h and *l* = As specified in (a).

(c) The thickness of web plates is not to be less than that obtained from the following formula:

$$10S_1 + 2.5 \qquad mm$$

where:

S_1 = Spacing, in m, of web stiffeners or depth of girders, whichever is smaller.

(d) The thickness of web plates at both end parts for 0.2*l* is not to be less than that obtained from the following formulae, whichever is greater:

$$\frac{CKSh\mathit{l}}{24 \cdot d_0} + 2.5 \qquad mm$$

$$\sqrt[3]{\frac{CSh\mathit{l}S_1^2}{0.19 \cdot d_0}} + 2.5 \qquad mm$$

where:

S, h and *l* = As specified in (a).

d_0 = Depth, in m, of girders.
S_1 = As specified in (c).
C = As specified in 14.2.4 (d).

(e) Tripping brackets are to be provided at intervals of about 3 meters and where the breadth of face plates exceeds 180 mm on either side of the girder, these brackets are to be so arranged as to support the face plates.

(f) The actual section modulus and moment of inertia of girders are to be calculated in accordance with 1.6.3 of this Part. Where stiffeners are provided within the effective breadth, they may be included in the calculation.

14.2.7 Plating of bulkheads, decks, inner bottoms, etc. are to be, if necessary, strengthened at the location of the end brackets of stiffeners and the end of girders.

14.2.8 Bulkhead Recesses

(a) In way of bulkhead recesses, beams are to be provided at every frame and under the upper bulkhead in accordance with the requirements in 9.2.1 and 14.2.3 taking the beam spacing as the stiffener spacing. Where the lower end of the upper bulkhead is especially strengthened, the beam under the upper bulkhead may be dispensed with.

(b) The thickness of deck plating forming the top of bulkhead recesses is to be at least 1.0 mm greater than that given by 14.2.1, regarding the deck plating as bulkhead plating and the beams as stiffeners. However, the thickness is not to be less than that required for deck plating in that location.

(c) The thickness of pillars supporting bulkhead recesses are to be determined taking into account the water pressure that might be applied on the upper surface of the recesses, and their end connections are to be sufficiently strong enough to withstand the water pressure which might be applied on the under surface.

14.2.9 Where stiffeners are cut or the spacing of stiffeners is increased in order to provide the watertight door in the bulkhead, the opening is to be suitably framed and strengthened as to maintain the full strength of the bulkhead. The door frames are not to be considered as stiffeners.

14.3 Watertight Doors

14.3.1 General

(a) All openings in the watertight bulkheads and the part of the deck which forms the step of the bulkheads are to be closed by watertight closing appliances (referred to as "watertight doors" in this chapter) in accordance with the requirements in 14.3.2 to 14.3.5.

(b) Watertight doors as specified in (a) above are to be normally closed at sea, except where deemed necessary for the ship's operation by the Society. Watertight doors or ramps fitted to internally subdivided cargo spaces are to be permanently closed at sea.

14.3.2 Types of Watertight Doors

(a) Watertight doors are to be of a sliding type.

(b) Notwithstanding the provisions in (a) above, watertight doors provided at small access openings, which are approved by the Society, may be of a hinged type or rolling type, except where the doors are required to be capable of being operated remotely by the provisions of 14.3.4(b).

(c) Notwithstanding the provisions in (a) above, watertight doors or ramps fitted to internally subdivided cargo spaces may be of a type other than the sliding type.

(d) Doors which are closed by dropping or by the action of a dropping weight are not permitted.

14.3.3 Strength and Watertightness

(a) Watertight doors are to be of ample strength and watertightness for water pressure to a head up to the bulkhead deck, and door frames are to be effectively secured to the bulkheads. Watertight doors are to be tested by water pressure before they are fitted other than those specified in the following (i) to (iii).

(i) The prototype of such doors has been tested by design water pressure.

(ii) The design of such doors has been verified to have enough strength and watertightness by direct structural analysis. Where watertight doors utilize gasket seals, a prototype pressure test to confirm that the compression of the gasket material is capable of accommodating any deflection is to be carried out.

(iii) Such doors are complying with a standard deemed appropriate by the Society.

(b) Hydrostatic tests specified in 14.3.3(a) are to be carried out as follows:

(i) The head of water used for the hydrostatic test is to correspond at least to the head measured from the lower edge of the door opening (at the location in which the door is to be fitted in the ship) to the bulkhead deck. However, for watertight doors subject to the damage stability requirements, the head is not to be less than the height of the final damage waterline or the intermediate waterline, whichever is greater.

(ii) The acceptable leakage rate at the test is not to be greater than the following values.

(1) Doors with gaskets: No leakage

(2) Doors with metallic sealing: 1.0, in liter/min

(iii) Notwithstanding (ii) above, the following leakage rate may be accepted for hydrostatic tests on large doors located in those spaces employing gasket seals or guillotine doors located in conveyor tunnels.

(1) For doors of design head exceeding 6.1 m:

$$(P + 4.572) \cdot \frac{h^3}{6568} \qquad \text{liter/min}$$

Where P, in m, is the perimeter of door opening, and h, in m, is the test head of water.

(2) For doors with a design head not exceeding 6.10 m, the acceptable leakage rate is the value calculated by the formula specified in (1) above or 0.375, in liter/min, whichever is greater.

(c) Where watertight doors are provided in cargo spaces, such doors are to be protected by suitable means against damage from items such as cargoes.

14.3.4 Control

(a) All watertight doors, except those which are to be permanently closed at sea, are to be capable of being opened and closed by hand locally, from both sides of the doors, with the ship listed 30 degrees to either side.

(b) In addition to the requirements of (a) above, watertight doors which are used at sea or normally open at sea are to be capable of being remotely closed by power from the navigation bridge.

(c) Watertight doors are not to be able to be opened remotely. In addition, watertight doors complying with the provisions of 14.3.2 (c) are not to be remotely controlled.

14.3.5 Indication

(a) Watertight doors, except those permanently closed at sea, are to be provided with position indicators showing whether the doors are open or closed on the bridge and at all operating positions.

(b) For watertight doors which are to be capable of being remotely closed, an indication is to be placed locally showing that the door is in remote control mode.

14.3.6 Watertight doors which are capable of being remotely closed are to be provided with an audible alarm which will sound at the door position whenever such a door is remotely closed.

14.3.7 Source of Power

(a) The remote controls, indications and alarms required in 14.3.4 to 14.3.6 are to be operable in the event of main power failure.

(b) Electrical installations for devices specified in (a) except those of a water-proof type approved by the Society are not to be under the freeboard deck.

(c) Cables for devices specified in (a) are to be protected by means deemed appropriate by the Society.

14.3.8 Notices

(a) Watertight doors which are to be normally closed at sea but not provided with a means of remote closure are to have notices fixed to both sides of the doors stating "To be kept closed at sea".

(b) Watertight doors which are to be permanently closed at sea are to have notices fixed to both sides stating "Not to be opened at sea". Such doors which are accessible during the voyage are to be fitted with a device which prevents unauthorized opening.

14.3.9 Sliding Doors

(a) Where a sliding watertight door is operated by rods, the lead of the operating rods is to be as direct as possible and the screw is to work in a nut of brass or other approved materials.

(b) The frames of vertically sliding watertight doors are not to have a groove at the bottom in which dirt might lodge and prevent the door from closing.

14.3.10 Hinged Doors and Rolling Doors

(a) For hinged and rolling watertight doors, the hinge pins and the wheel axle of these doors are to be of brass or other approved materials.

(b) Hinged and rolling watertight doors except those that are to be permanently closed at sea are to be of quick acting or single action type which is capable of being closed and secured from both sides of the doors.

14.4 Other Watertight Construction

14.4.1 For the application of this chapter, trunks required to maintain watertightness are to be capable of withstanding internal or external pressure under the most severe conditions at the intermediate or final stages of flooding.

Table II 14-2
Value of C

Vertical Stiffener				
Lower end	Upper end			
	Lug-connection or supported by horizontal girders	Connection		End of stiffener unattached
		Type A	Type B	
Lug-connection or supported by horizontal girders	1.00	1.00	1.15	1.35
Connected by brackets	0.80	0.80	0.90	1.00
stiffener web attached at end only	1.15	1.15	1.35	1.60
End of stiffener unattached	1.35	1.35	1.60	2.00

Horizontal Stiffener		
The other end	One end	
	Lug-connection, connected by brackets or supported by vertical girders	End of stiffener unattached
Lug-connection, connected by brackets or supported by vertical girders	1.00	1.35
End of stiffener unattached	1.35	2.00

Notes:

(1) Lug-connection is a connection where both webs and face plates of stiffeners are effectively attached to the bulkhead plating, decks or inner bottoms and which are strengthened by effective supporting members on the opposite side of the plating.

(2) " Type A" of vertical stiffeners is a connection by bracket to the longitudinal members or to the adjacent members, in line with the stiffeners, of the same or larger sections. (See Fig. II 14-1 (a))

(3) " Type B" of vertical stiffeners is a connection by bracket to the transverse members such as beams, or other connections equivalent to the connection mentioned above. (See Fig. II 14-1 (b))

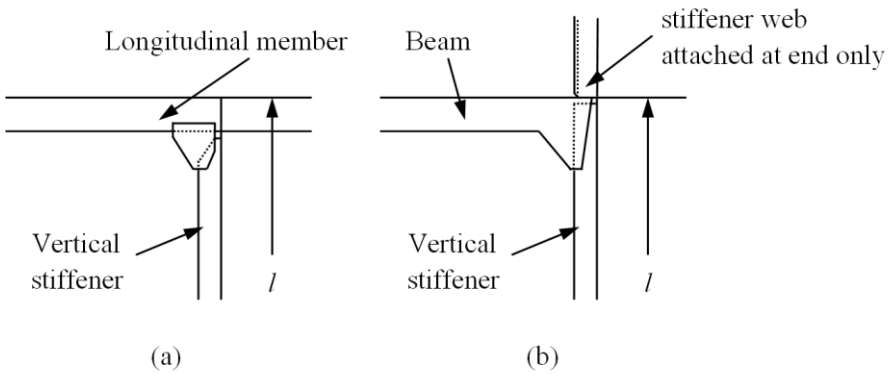

Fig. II 14-1
Types of End Connections

Table II 14-3
Value of C (for corrugated bulkheads)

The other end of bulkhead	One end of bulkhead		
	Supported by horizontal or vertical girders	Upper end welded directly to deck	Upper end welded to stool efficiently supported by ship structure
Supported by horizontal or vertical girders or lower end of bulkhead welded directly to decks or inner bottoms	$\frac{4Z_0}{2Z_0 + Z_1 + Z_2}$	$\frac{4Z_0}{2.2Z_0 + Z_2}$	$\frac{4Z_0}{2.6Z_0 + Z_2}$
Lower end of bulkhead welded to stool efficiently supported by ship structure	$\frac{4.8\left(1+\frac{l_H}{l}\right)^2}{2+\frac{Z_1}{Z_0}+\frac{d_H}{d_0}}$	$\frac{4.8d_0\left(1+\frac{l_H}{l}\right)^2}{2.2d_0 + d_H}$	$\frac{4.8d_0\left(1+\frac{l_H}{l}\right)^2}{2.6d_0 + d_H}$
	The value of C is not to be less than that obtained from 14.2.4 (a).		

Notes:

Z_0 : Minimum section modulus, in cm^3, per half pitch of mid part for $0.6l$ of the corrugated bulkhead

Z_1 and Z_2 :

Section modulus, in cm^3, per half pitch of end part
For vertical corrugation, Z_1 is the section modulus of the upper end part and Z_2 is that of the lower end part. Where the plate thickness is increased in accordance with 14.2.4(e) the section modulus is to be that for the plate thickness reduced by the increment.

l_H : Height, in m, of stool measured from inner bottom plating

d_H : Breadth, in m, of stool measured on inner bottom plating

d_0 : Depth, in m, of corrugation

Table II 14-4
Value of C

Position		Upper end	Lower end
Vertically corrugated bulkhead	Uppermost span	0.4	1.6
	Other spans	0.9	1.1
Both ends of horizontally corrugated bulkhead		1.0	

Chapter 15

Non-Watertight Centerline Bulkheads in Hold spaces

15.1 Construction

15.1.1 The thickness of bulkhead plating is to be not less than that obtained from the following formulas:

$$t = 6 \quad \text{mm} \quad \text{for } s \leq 760 \text{ mm}$$

$$t = 6 + 0.5\left(\frac{s - 760}{150}\right) \quad \text{mm} \quad \text{for } s > 760 \text{ mm}$$

where:

s = Stiffener spacing, in mm.

15.1.2 Where the centerline bulkhead is arranged to support beams, stiffeners are to be of such scantlings as to provide supports equivalent to pillars as given in 10.6 of this Part. However, stiffeners are not to be less in depth than 150 mm in holds and 100 mm in tween decks.

Chapter 16
Deep Tanks

16.1 General

16.1.1 The deep tank is a tank used for the carriage of water, fuel oil and other liquids, forming a part of the hull in holds or tween decks. Deep tanks used for the carriage of oils that need to be especially specified are designated as "deep oil tanks".

16.1.2 Watertight divisions (other than those specified in 16.1.3(c), peak tank bulkheads, and boundary bulkheads of deep tanks are to be constructed in accordance with the requirements in this Chapter. Where the bulkhead of a deep tank partly serves as a watertight bulkhead, that part of the bulkhead is to be in accordance with the requirements in Chapter 14.

16.1.3 Tank Division

(a) Deep tanks are to be provided with such longitudinal watertight divisions as necessary to meet the requirements for stability in service conditions as well as while the tanks are being filled or discharged.

(b) Deep tanks for fresh water or fuel oil or those which are not intended to be kept entirely filled in service conditions are to have additional divisions or deep wash plates as necessary, to minimize the dynamic forces acting on the structure.

(c) Longitudinal watertight divisions which will be subjected to pressure from both sides in tanks which are to be entirely filled or emptied in service conditions may be of the scantlings required for ordinary watertight bulkheads as stipulated in Chapter 14. In such cases, the tanks are to be provided with fittings such as deep hatches and inspection plugs in order to ensure that the tanks are kept full in service conditions.

16.1.4 In wing tanks and hold tanks of which the length or breadth exceeds 0.1L+5.0, in m, and in topside tanks and hopper tanks, the thickness of girders, struts and their end brackets and bulkhead plates is not to be less than that given by Table II 16-1 in accordance with the length of ship.

Table II 16-1
Minimum Thickness

L, in m	≥	90	105	120	135	150	165	180	195	225	275
	<	105	120	135	150	165	180	195	225	275	--
Thickness, in mm		8.0	8.5	9.0	9.5	10.0	10.5	11.0	11.5	12.0	12.5

16.1.5 For large tank boundaries, the scantlings of bulkhead plates, stiffeners, girders and cross ties are not to be less than that obtained from the relevant formulae in 16.2.2, 16.2.3, 16.2.4, 16.2.5 and 16.2.6, where the value of h is that given by the following formula or the one specified in each requirement, whichever is greater.

$0.85(\mathrm{h} + \Delta\mathrm{h})$ m

where:

h = As specified in each requirement of 16.2.2(a) or of 16.2.3(a).

Δh = Additional water head as the following formula:

$$\frac{16}{\mathrm{L}}(l_{\mathrm{t}} - 10) + 0.25(\mathrm{b_t} - 10) \quad \mathrm{m}$$

l_t = Tank length, in m. Not to be less than 10 m.

b_t = Tank breadth, in m. Not to be less than 10 m.

16.2 Deep Tank Bulkheads

16.2.1 The construction of bulkheads and decks forming boundaries of deep tanks is to be in accordance with the requirements in Chapter 14 of this Part, unless otherwise specified in this Chapter.

16.2.2 The thickness of deep tank bulkhead plating is not to be less than that obtained from the following formula:

$3.6S\sqrt{Kh} + 3.5$ mm

where:

S = Spacing of stiffeners, in m.

h = Greater of the distances given below:

(a) Vertical distance, in m, measured from the lower edge of plate to the midpoint of the distance between the top of tanks and the top of overflow pipes.

(b) 0.7 times the vertical distance, in m, measured from the lower edge of the plate to the point 2.0 m above the top of the overflow pipes.

K = Material factor as specified in 1.5.2 (a) of this Part

16.2.3 The section modulus of bulkhead stiffeners is not to be less than that obtained from the following formula:

$7CKSh\ell^2$ mm

where:

S and ℓ = As specified in 14.2.3 of this Part.

h = Greater of the vertical distances given below, with the lower end being regarded as the mid-point of ℓ for vertical stiffeners and as S for horizontal stiffeners.

(a) Vertical distance, in m, measured from the lower end to the midpoint of the distance between the top of the tanks and the top of the overflow pipes.

(b) 0.7 times the vertical distance, in m, measured from the lower end to the point 2.0 m above the top of the overflow pipes.

C = Coefficient given in Table II 16-2 of this Chapter, according to the type of end connections

K = Material factor as specified in 1.5.2 (a) of this Part

16.2.4 Corrugated Bulkheads

(a) The thickness of plates of corrugated bulkheads is not to be less than that obtained from the following formula:

$3.6CS_1\sqrt{h} + 3.5$ mm

where:

S_1 = As specified in 14.2.4(a) of this Part.

h = As specified in 16.2.2 of this Chapter.

C = Coefficient given below:

= $\frac{1.4}{\sqrt{1+(t_w/t_f)^2}}$ for face part

= 1.0 for web part

t_f and t_w = As specified in 14.2.4(a) of this Part.

K = Material factor as specified in 1.5.2 (a) of this Part

(b) The section modulus per half pitch of corrugated bulkheads is not to be less than that obtained from the following formula:

$7CKSh\ell^2$ cm^3

where:

S = As specified in 14.2.4 (b) of this Part.

l	=	Length, in m, between the supports, as indicated in Fig II 16-1 of this Chapter.
C	=	Coefficient given in Table II 16-3 of this Chapter, according to the type of end connection.
h	=	As specified in 16.2.3 of this Chapter.
K	=	Material factor as specified in 1.5.2 (a) of this Part

For bulkheads with lower stools of which the width in the longitudinal direction at the lower end, d_H, is less than 2.5 times the web depth of the bulkhead, d_0 (See Fig. II 16-1), the measurement of l and the values of C are to be at the discretion of the Society.

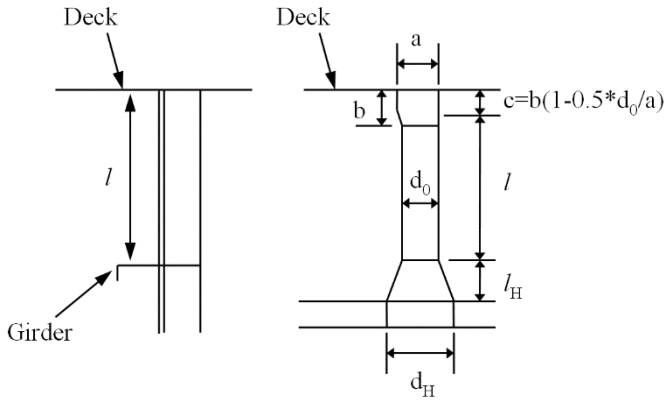

Fig. II 16-1
Measurement of *l*

(c) The thickness of plates at end parts for 0.2l in line with l is not to be less than that obtained from the following formulae:

Thickness of web:

$$\frac{CKShl}{24 \cdot d_0} + 3.5 \qquad \text{mm}$$

Not to be less than that obtained from the following formula:

$$\sqrt[3]{\frac{CShlb^2}{0.19 \cdot d_0}} + 3.5 \qquad \text{mm}$$

Thickness of the face part except the upper end part of vertically corrugated bulkheads:

$$\frac{12a}{\sqrt{K}} + 3.5 \qquad \text{mm}$$

where:

h	=	As specified in 16.2.3 of this Chapter.
C, S, d_0, a and b	=	As specified in 14.2.4 (d) of this Part.
l	=	As specified in (b).
K	=	Material factor as specified in 1.5.2 (a) of this Part

16.2.5 Girders Supporting Bulkhead Stiffeners

(a) The section modulus of girders is not to be less than that obtained from the following formula:

$$7.13KSh\ell^2 \qquad \text{cm}^3$$

where:

S	=	Breadth, in m, of the area supported by the girders.

h = Vertical distance, in m, measured from the mid-point of S for horizontal girders, and from the mid-point of l for vertical girders, to the top of h specified in 16.2.3.
l = Span, in m, specified in 14.2.6 of this Part.
K = Material factor as specified in 1.5.2 (a) of this Part.

(b) The moment of inertia of girders is not to be less than that obtained from the following formula. The depth of girders is not to be less than 2.5 times the depth of slots for stiffeners.

$30Kh\,l^4$ cm^4

where:
h and l = As specified in (a).
K = Material factor as specified in 1.5.2 (a) of this Part

(c) The thickness of web plates is not to be less than that obtained from the following formulae, whichever is the greatest:

$\frac{CKShl}{24 \cdot d_1} + 3.5$ mm

$\sqrt[3]{\frac{CShlS_1^2}{0.19 \cdot d_1}} + 3.5$ mm

$10S_1+3.5$ mm

where:
S, h, and l = As specified in (a).
S_1 = Spacing of web stiffeners or the depth of girders, whichever is smaller, in m.
d_1 = Depth of the girder at the location considered, reduced by the depth of slots for stiffeners, in m.
C = Coefficient obtained from the following formulae, but not to be less than 0.5.
$\left|1 - 2\frac{x}{l}\right|$ for horizontal girders
$\left|1 + \frac{1}{5}\frac{l}{h} - \left(2 + \frac{l}{h}\right)\frac{x}{l} + \frac{l}{h}\left(\frac{x}{l}\right)^2\right|$ for vertical girders
x = Distance, in m, measured from the end of l for horizontal girders, and from the lower end of l for vertical girders, to the location considered.
K = Material factor as specified in 1.5.2 (a)

(d) The actual section modulus and moment of inertia of girders are to be calculated in accordance with the provisions in 14.2.6 (f).

16.2.6 Cross Ties

(a) Where efficient cross ties are provided across deep tanks connecting girders on each side of the tanks, the span of girders specified in 16.2.5 may be measured between the end of the girder and the centre line of the cross tie or between the centre lines of adjacent cross ties.

(b) The sectional area of cross ties is not to be less than that obtained from the following formula:

$1.3Sb_s h$ cm^2

where:
h and S = As specified in 16.2.5.
b_s = Breadth, in m, of the area supported by the cross ties.

(c) The ends of cross ties are to be bracketed to girders.

16.2.7 The scantlings of the members forming the top or the bottom of deep tanks are to be in accordance with the requirements in this Chapter, where the members are treated as if they were members forming a deep tank bulkhead at that location. The scantlings of the members are not to be less than that required by the other requirements for the construction of the tank top as well as the bottom. For top plating of deep tanks, the thickness of plates is to be at least 1 mm greater than that of the thickness specified in 16.2.2.

16.2.8 The thickness of plates of bulkheads and girders which are not in contact with sea water in service conditions may be reduced from the requirements in 16.2.2, 16.2.4 and 16.2.5 by the values given below:

For plates with only one side in contact with sea water: 0.5 mm
For plates with neither side in contact with sea water: 1.0 mm

However, bulkhead plates in way of locations such as bilge wells are to be regarded as plates in contact with sea water.

16.3 Fittings of Deep Tanks

16.3.1 Limbers and air holes are to be cut suitably in the structural members to ensure that air or water does not remain stagnated in any part of the tank.

16.3.2 Efficient arrangements are to be made for draining bilge water from the top of deep tanks.

16.3.3 The inspection plugs provided on deep tank tops as required in 16.1.3 are to be located in readily accessible positions, and the plugs are to be open as far as is practicable when filling the tank with water.

16.3.4 Cofferdams

(a) Oiltight cofferdams are to be provided between the tanks carrying oils and those carrying fresh water, such as for personnel use or boiler feed water, to prevent the fresh water from being contaminated by the oil.

(b) Crew spaces and passenger spaces are not to be directly adjacent to tanks carrying fuel oil. Such compartments are to be separated from the fuel oil tanks by cofferdams which are well ventilated and accessible. Where the top of fuel oil tanks have no opening and is coated with incombustible coverings of not less than 38 mm in thickness, the cofferdam between such compartments and the top of the fuel oil tanks may be omitted.

16.4 Welding of Corrugated Bulkheads

16.4.1 The welding of corrugated bulkheads is to be in accordance with Table II 16-4.

16.4.2 For the supporting members of corrugated bulkheads or stools, such as floors, girders or other primary supporting members and stiffeners, fillet weld leg length is to be suitably increased or to be beveled and welded. In cases where the angle between the side plating of a lower stool and inner bottom plating is relative small, the fillet weld leg lengths for supporting members to inner bottom plating are to be suitably increased taking into account such an angle.

16.4.3 In cases where stools are fitted, the fillet weld leg length for the top or bottom plating of stools to the side plating of stools as well as the side plating of stools to inner bottom plating is to be suitably increased or to be beveled and welded.

16.4.4 Where shedder plates are fitted at the lower parts of corrugated bulkheads, the welding to the corrugation and the top plate of the lower stool is to be one-side penetration welds or equivalent.

16.4.5 Where gusset plates are fitted at the lower parts of corrugated bulkheads, the welding to the top of the lower stool is to be either full penetration or deep penetration welds.

Table II 16-2
Values of C

The other end of stiffeners		One end of stiffeners			
		Lug-connection or supported by girders	Connection		End of stiffener unattached
			Type A	Type B	
Lug-connection or supported by girders		1.0	0.85	1.30	1.50
Connected	Type A	0.85	0.70	1.15	1.30
	Type B	1.30	1.15	0.85	1.15
End of stiffener unattached		1.50	1.30	1.15	1.50

Notes:
1. "Type A" is a connection by bracket of the stiffener to the double bottom or to a stiffener of equivalent strength attached to the face plates of adjacent members, or a connection of equivalent strength. (See Fig. II 14-1 (a))
2. "Type B" is a connection by bracket of the stiffener to transverse members such as beams, frames or the equivalent thereto. (See Fig. II 14-1 (b))

Table II 16-3
Values of C

Lower end	Upper end		
	Supported by Girders	Welded directly to deck	Welded to stool efficiently supported by ship structure
Supported by girders or welded directly to decks or inner bottoms	1.00	1.50	1.35
Welded to stool efficiently supported by ship structure	1.50	1.20	1.00

Table II 16-4
Welding of Corrugated Bulkheads

Type of Corrugated bulkhead		Application	Welding
Vertically corrugated bulkhead	Without stool	Upper deck	Double continuous fillet welding with a fillet weld leg length that is not less than 0.7 times the thickness of the corrugated bulkhead.
		Inner bottom	(1) For ships having a length, L_1, of 150m and above: Full penetration double bevel welds (2) For ships having a length, L_1, that is less than 150m: Full penetration double bevel welds for webs and flanges of the corrugated bulkhead that are within about 200mm from the corner of the corrugation For other parts, double continuous fillet welding with a fillet weld leg length that is not less than 0.7 times the thickness of the corrugated bulkhead.
		Corrugated bulkhead	Full penetration double bevel welds
	Lower stool	Top plate	(1) For ships having a length, L_1, of 150m and above: Full penetration double bevel welds (2) For ships having a length, L_1, that is less than 150m: Full penetration double bevel welds for webs and flanges of the corrugated bulkhead that are within about 200mm from the corner of the corrugation For other parts, double continuous fillet welding with a fillet weld leg length that is not less than 0.7 times the thickness of the corrugated bulkhead.
	Upper stool	Bottom plate	Double continuous fillet welding with fillet weld leg length that is not less than 0.7 times the thickness of the corrugated bulkhead.
Horizontally corrugated bulkhead		Upper deck, Inner bottom, Corrugated bulkhead	Double continuous fillet welding with a fillet weld leg length that is not less than 0.7 times the thickness of the corrugated bulkhead.
Note: L_1 is the length, in m, of ship specified in 1.2.1 or 0.97 times the length, in m, of the ship on the load line, whichever is smaller.			

Chapter 17

Hatchways, Machinery Space Openings and Other Deck Openings

17.1 General

17.1.1 The requirements in this Chapter may be specially considered for the ship with an unusually large freeboard.

17.1.2 Position of Exposed Deck Openings

(a) For the purpose of this Chapter, two positions of exposed deck openings are defined as follows:

Position 1 :

Upon exposed freeboard and raised quarter decks, and upon exposed superstructure decks situated forward of a point located a quarter of the ship's length for freeboard, L_f, from the forward perpendicular.

Position 2 :

Upon exposed superstructure decks situated abaft a quarter of the ship's length for freeboard, L_f, from the forward perpendicular and located at least one standard height of superstructure above the freeboard deck, or upon exposed superstructure decks situated forward of a point located a quarter of the ship's length for freeboard, L_f, from the forward perpendicular and located at least two standard heights of superstructure above the freeboard deck.

(b) The forward perpendicular mentioned in (a) is to be taken at the forward end of length of ship for freeboard, L_f, as defined in 1.2.10 of this Part. The forward perpendicular is to coincide with the foreside of the stem on the waterline on which the Length is measured.

17.1.3 Renewal Thickness of Steel Hatchway Covers and Hatchway Coamings for Ships in Operation

Structural drawings for hatch covers and hatch coamings complying with the requirements of 17.2 are to indicate the renewal thickness, $t_{renewal}$, for each structural element given by the following formula in addition to the as built thickness, $t_{as\text{-}built}$. If the thickness for voluntary addition is included in the as built thicknesses, the value may be at the discretion of the Society.

$t_{renewal} = t_{as\text{-}built} - t_c + 0.5$ mm

where:

t_c = Corrosion additions specified in Table II 17-1

Where corrosion addition t_c is 1.0, in mm, renewal thickness may be given by the formula:

$t_{renewal} = t_{as\text{-}built} - t_c$ mm

17.2 Hatchways

17.2.1 Application

(a) The construction and the means for closing of cargo and other hatchways are to comply with the requirements in 17.2.

(b) When the loading condition or the type of construction differs from that specified in this section, the calculation method used is to be as deemed appropriate by the Society.

17.2.2 General Requirement

(a) Primary supporting members and secondary stiffeners of hatch covers are to be continuous over the breadth and length of hatch covers. When this is impractical, appropriate arrangements are to be adopted to ensure sufficient load carrying capacity and sniped end connections are not to be allowed.

(b) The spacing of primary supporting members parallel to the direction of secondary stiffeners is not to exceed 1/3 of the span of the primary supporting members.

(c) Secondary stiffeners of hatch coamings are to be continuous over the breadth and length of said hatch coamings.

17.2.3 Net Scantling Approach

(a) Unless otherwise specified, the structural scantlings specified in this section are to be net scantlings which do not include any corrosion additions.

(b) "Net scantlings" are the scantlings necessary to obtain the minimum net scantlings required by 17.2.5 and 17.2.9.

(c) Required gross scantlings are not to be less than the scantlings obtained from adding the corrosion addition t_c specified in (d) below to the net scantlings obtained from the requirements in this section.

(d) The corrosion addition t_c is to be taken as specified in Table II 17-1 according to ship type, the type of structure and structural members of steel hatchway covers, steel pontoon covers and steel weathertight covers (hereinafter referred to as "steel hatch covers").

(e) Strength calculations using beam theory, grillage analysis or FEM are to be performed with net scantlings.

17.2.4 Design Loads

The design loads for steel hatchway covers, steel pontoon covers, steel weathertight covers, portable beams and hatchway coamings applying the requirements in 17.2 are specified in following (a) to (e):

(a) Design vertical wave load P_V, in kN/m^2, is not to be less than that obtained from Table II 17-2. Design vertical wave loads need not to be combined with cargo loads according to (c) and (d) simultaneously.

(b) Design horizontal wave load P_H, in kN/m^2, is not to be less than that obtained from the following formulae. However, P_H is not to be taken less than the minimum values given in Table II 17-3 of this Chapter. P_H needs not be included in the direct strength calculation of the hatch cover, expect where structures supporting stoppers are assessed.

$P_H = ac(bC_1 - y)$

where:

a = As given by the following:

= $20 + \frac{L'}{12}$ for unprotected front coamings and hatch cover skirt plates

= $10 + \frac{L'}{12}$ for unprotected front coamings and hatch cover skirt plates, where the distance from the actual freeboard deck to the summer load line exceeds the minimum non-corrected tabular freeboard according to the ILCC by at least one superstructure standard height

= $5 + \frac{L'}{15}$ for side and protected front coamings and hatch cover skirt plates

= $7 + \frac{L'}{100} - 8\frac{x}{L}$ for aft ends of coamings and aft hatch cover skirt plates abaft amidships

= $5 + \frac{L'}{100} - 4\frac{x}{L}$ for aft ends of coamings and aft hatch cover skirt plates forward of amidships

L' = Length of ship L, in m. However, where L exceeds 300 m, L' is to be taken as 300 m.

L = Length of ship specified in 1.2.1 of this Part.

C_1 = As given by the following formulae:

= $10.75 - \left(\frac{300 - L}{100}\right)^{1.5}$ for $L \leq 300$

= 10.75 for $300 < L \leq 350$

$= 10.75 - \left(\frac{L-350}{150}\right)^{1.5}$ for $350 < L$

b = As given by the following formula:

$= 1.0 + \left(\frac{0.45 - \frac{x}{L}}{C_{b1} + 0.2}\right)^2$ for $\frac{x}{L} < 0.45$

$= 1.0 + 1.5\left(\frac{\frac{x}{L} - 0.45}{C_{b1} + 0.2}\right)^2$ for $\frac{x}{L} \geq 0.45$

x = Distance, in m, from the hatchway coamings or hatch cover skirt plates to after perpendicular, or distance from the mid-point of the side hatchway coaming or hatch cover skirt plates to after perpendicular. However, where the length of the side hatchway coaming or hatch cover skirt plates exceeds 0.15 L, the side hatchway coaming or hatch cover skirt plates are to be equally subdivided into spans not exceeding 0.15 L and the distance from the mid-point of the subdivisions to the after perpendicular is to be taken.

C_{b1} = Block coefficient. However, where C_b is 0.6 or under, C_{b1} is to be taken as 0.6 and where C_b is 0.8 and over, C_{b1} is to be taken as 0.8. When determining scantlings of the aft ends of coamings and aft hatch cover skirt plates forward of amidships, C_{b1} does not need to be taken as less than 0.8.

c = As given by the following formula. However, where $\frac{b'}{B'}$ is less than 0.25, $\frac{b'}{B'}$ is to be taken as 0.25.

$= 0.3 + 0.7\frac{b'}{B'}$

b' = Breadth, in m, of hatchway coamings at the position under consideration

B' = Breadth, in m, of ship on the exposed weather deck at the position under consideration

y = Vertical distance, in m, from the designed maximum load line to the mid-point of the span of stiffeners when determining the scantlings of stiffeners and to the mid-point of the plating when determining the thickness of plating

(c) The load on hatch covers due to cargo loaded on said covers is to be obtained from the following (i) and (ii). Load cases with partial loading are also to be considered.

(i) Distributed load due to cargo load P_{cargo}, in kN/m^2, resulting from heave and pitch is to be determined according to the following formula:

$P_{cargo}=P_C(1+a_v)$

where:

P_C = Static uniform cargo load, in kN/m^2

a_v = Acceleration addition given by the following formula:

$$a_v = \frac{0.11mV'}{\sqrt{L}}$$

m = As given by the following formulae:

$= m_0 - 5(m_0 - 1)\frac{x}{L}$ for $0 \leq \frac{x}{L} \leq 0.2$

$= 1.0$ for $0.2 < \frac{x}{L} \leq 0.7$

$= 1 + \frac{m_0 + 1}{0.3}\left(\frac{x}{L} - 0.7\right)$ for $0.7 < \frac{x}{L} \leq 1.0$

m_0 = As given by the following formula:

$$m_0 = 1.5 + \frac{0.11V'}{\sqrt{L}}$$

V' = Speed of ship, in knots, specified in 1.2.7 of this Part. However, where V' is less than $\sqrt{L}$, V' is to be taken as $\sqrt{L}$.

x and L = As specified in (b) above

(ii) Point load F_{cargo} , in kN, due to a single force resulting from heave and pitch (e.g. in the case of containers) is to be determined by the following formula.

$F_{cargo}=F_s(1+a_v)$

where:

F_S = Static point load due to cargo, in kN

a_v = As specified in (i) above

(d) In addition to the loads specified in (a) to (d) above, when the load in the ship's transverse direction by forces due to elastic deformation of the ship's hull is acting on the hatch covers, the sum of stresses is to comply with the permissible values specified in 17.2.5(a)(i).

17.2.5 Strength Criteria of Steel Hatch Covers and Hatch Beams

(a) Permissible stresses and deflections

(i) The equivalent stress σ_E, in N/mm^2, in steel hatchway covers and steel weathertight covers is to comply with the criteria in the following (1) and (2):

(1) For beam element calculations and grillage analysis:

$$\sigma_E = \sqrt{\sigma^2 + 3\tau^2} \leq 0.8\sigma_F$$

where:

σ = Nominal stress, in N/mm^2

τ = Shear stress, in N/mm^2

σ_F = Minimum upper yield stress, in N/mm^2, or proof stress, in N/mm^2, of the material. However, when material with σ_F of more than 355 N/mm^2 is used, the value for σ_F is to be as deemed appropriate by the Society.

(2) For FEM calculations, in cases where the calculations use shell or plane strain elements, the stresses are to be taken from center of the individual element.

$\sigma_E = \sqrt{\sigma_x^2 - \sigma_x\sigma_y + \sigma_y^2 + 3\tau^2} \leq 0.8\sigma_F$, when assessed using the design load specified in 17.2.4(a), and

$\sigma_E = \sqrt{\sigma_x^2 - \sigma_x\sigma_y + \sigma_y^2 + 3\tau^2} \leq 0.9\sigma_F$, when assessed using any other design loads

where:

σ_x = Normal stress, in N/mm^2, in the x-direction

σ_y = Normal stress, in N/mm^2, in the y-direction

τ = Shear stress, in N/mm^2, in the x-y plane

x, y = Coordinates of a two dimensional Cartesian system in the plane of the considered structural element

σ_F = As specified in (1) above

(ii) The equivalent stress σ_E, in N/mm^2, in steel pontoon covers and hatch beams is not to be greater than $0.68\sigma_F$,where σ_F is as specified in (i) above.

(iii) Deflection is to comply with following (1) and (2):

(1) When the design vertical wave load specified in 17.2.4(a) is acting on steel hatchway covers, steel pontoon covers, steel weathertight covers and portable beams, the vertical deflection of primary supporting members is not to be taken as more than that given by the following:

$0.0056l$ for steel hatchway covers and steel weathertight covers

$0.0044l$ for steel pontoon covers and hatch beams

l = Span of primary supporting members, in m

(iv) For FEM calculations, equivalent stress σ_E (N/mm^2)in girders with unsymmetrical flanges of steel hatchway covers and steel weathertight covers is to be determined according to the following (1) or (2):

(1) FEM calculations using the stress obtained for fine mesh elements; or

(2) FEM calculations using the stress at the edge of the element or the stress at the centre of the element, whichever is greater.

(b) Local net plate thickness of steel hatch covers

(i) The local net thickness t_{net}, in mm, of steel hatch cover top plating is not to be less than that obtained from the following formula, and it is not to be less than 1% of the spacing of the stiffeners or 6 mm, whichever is greater:

$$t_{net} = 15.8 F_P S \sqrt{\frac{P_{HC}}{0.95\sigma_F}}$$

where:

F_P = Coefficient given by the following formula:
= $\frac{1.9\sigma}{\sigma_a}$ (for $\frac{\sigma}{\sigma_a} \geq 0.8$, for the attached plate flange of primary supporting members)
= 1.5 (for $\frac{\sigma}{\sigma_a} < 0.8$, for the attached plate flange of primary supporting members)

σ = Normal stress, in N/mm^2, of the attached plate flange of primary supporting members. The normal σ may be determined at a distance S from the webs of adjacent primary supporting members perpendicular to secondary stiffeners and at a distance S/2 from the web of an adjacent primary supporting member parallel to secondary stiffeners, whichever is greater (see Fig. II 17-1). The distribution of normal stress σ between two parallel girders is to be in accordance with 17.2.5(f)(iii)(3).

σ_a = Permissible stress, in N/mm^2, is to be as given by following formula:
$\sigma_a = 0.8\sigma_F$

S = Stiffener spacing, in m

P_{HC} = Design load, in N/mm^2, specified in 17.2.4(a) and 17.2.4(c)(i)

σ_F = Minimum upper yield stress or proof stress of the material, in N/mm^2

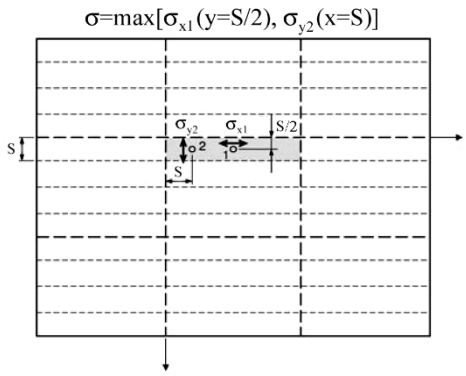

Fig. II 17-1
Determination of the Normal Stress of Hatch Cover Plating

(ii) The net thickness of double skin hatch covers and box girders is to be obtained in accordance with 17.2.5(e) below taking into consideration of the permissible stresses specified in 17.2.5(a)(i)

(iii) In addition to (ii) above, when the lower plating of double skin hatch covers is taken into account as a strength member of the hatch cover, the net thickness t_{net} of the lower plating is not to be less than 5 mm.

(iv) When lower plating is not considered to be a strength member of the hatch cover, the thickness of the lower plating is to be determined as deemed appropriate by the Society.

(v) When cargo likely to cause shear buckling is intended to be carried on a hatch cover, the net thickness t_{net}, in mm is not to be less than that obtained from the following formulae. In such cases, "cargo likely to cause shear buckling" refers particularly to large or bulky cargo lashed to the hatch cover, such as parts of cranes or wind power stations, turbines, etc. Cargo that is considered to be uniformly distributed over the hatch cover (e.g., timber, pipes or steel coils) does not need to be considered.

$t_{net} = 6.5S$
$t_{net} = 5$

(c) Net scantling of secondary stiffeners

(i) The net section modulus Z_{net}, in cm^3, of the secondary stiffeners of hatch cover top plates, based on stiffener net member thickness, is not to be less than that obtained from the following formula. The net section modulus of the secondary stiffeners is to be determined based on an attached plate width that is assumed to be equal to the stiffener spacing.

$$Z_{net} = \frac{K_L S P_{HC} l^2}{\sigma_F}$$

where:

K_L	=	Design loads coefficient, 104 for design loads specified in 17.2.4(a) above and 93 for loads specified in 17.2.4(c)(i) above
l	=	Secondary stiffener span, in m, is to be taken as the spacing of primary supporting members or the distance between a primary supporting member and the edge support, as applicable.
S	=	Stiffener spacing, in m
P_{HC}	=	Design load, in kN/m^2, as specified in 17.2.5(b)(i) above
σ_F	=	Minimum upper yield stress, in N/mm^2, or proof stress, in N/mm^2, of the material

(ii) The net shear sectional area A_{net}, in cm^2, of the secondary stiffener webs of hatch cover top plates is not to be less than that obtained from the following formula:

$$A_{net} = \frac{K_L S P_{HC}\, l}{\sigma_F}$$

where:

K_L	=	Design loads coefficient, 10.8 for design loads specified in 17.2.4(a) above and 9.6 for loads specified in 17.2.4(c)(i) above
l, S, P_{HC}, σ_F	=	As specified in (i) above

(iii) For flat bar secondary stiffeners and buckling stiffeners, the following formula is to be applied:

$$\frac{h}{t_{W,net}} \leq 15\sqrt{k}$$

where:

h	=	Height, in mm, of the stiffener
$t_{W,net}$	=	Net thickness, in mm, of the stiffener
k	=	$235/\sigma_F$
σ_F	=	As specified in (i) above

(iv) Stiffeners parallel to primary supporting members and arranged within the effective breadth according to 17.2.5(e)(ii) of this Chapter are to be continuous at crossing primary supporting member and may be regarded for calculating the cross sectional properties of primary supporting members.

(v) The combined stress of those stiffeners induced by the bending of primary supporting members and lateral pressures is not to exceed the permissible stresses according to 17.2.5(a)(i) of this Chapter.

(vi) For hatch cover stiffeners under compression, sufficient safety against lateral and torsional buckling according to 17.2.5(f)(iii) of this Chapter is to be verified.

(vii) For secondary stiffeners of the lower plating of double skin hatch covers, the requirements in (i) and (ii) above do not need to be applied due to the absence of lateral loads.

(viii) The net thickness (mm) of a stiffener (except for U-type stiffeners) web is not to be taken as less than 4 mm.

(ix) Single-side welding is not permitted for secondary stiffeners, except for U-type stiffeners.

(x) The requirements in this (c) do not need to be applied to stiffeners of the lower plating of double skin hatch covers in cases where the lower plating is not considered to be a strength member.

(d) Primary supporting members of steel hatch covers and hatch beams

(i) Scantlings of the primary supporting members of steel hatch covers and hatch beams are to be determined according to 17.2.5(e) below taking into consideration the permissible stresses specified in 17.2.5(a)(i).

(ii) Scantlings of the primary supporting members of steel hatch covers and hatch beam with variable cross-sections are to be not less than that obtained from the following formulae. For steel hatchway covers, S and *l* are to be read as b and S, respectively.

The net section modulus, in cm^3, of hatch beams or primary supporting members at the mid-point

$$Z_{net} = Z_{net\_cs}$$
$$Z_{net} = k_1 Z_{net\_cs}$$

The net moment of inertia, in cm^4, of hatch beams or primary supporting members at the mid-point

$$I_{net} = I_{net\_cs}$$
$$I_{net} = k_2 I_{net\_cs}$$

where:

Z_{net_cs}	=	Net section modulus, in cm^3, complying with requirement (i) above
I_{net_cs}	=	Net moment of inertia, in cm^4, complying with requirement (i) above
S	=	Spacing, in m, of portable beams or primary supporting members
l	=	Unsupported span, in m, of portable beams or primary supporting members
b	=	Width, in m, of steel hatch covers
k_1 , k_2	=	Coefficients obtained from the formulae given in Table II 17-4

(iii) In addition to (i) and (ii) above, the scantlings of the primary supporting members of steel hatch covers are to comply with the requirements specified in 17.2.5(f).

(iv) When biaxial compressed flange plates are considered, the effective width of flange plates is to comply with 17.2.5(f)(iii).

(v) In addition to (i) to (iv) above, net thickness t_{net} , in mm, of the webs of primary supporting members is not to be less than that obtained from the following formulae, whichever is greater:

$$t_{net} = 6.5S$$
$$t_{net} = 5$$

where:

S = Stiffener spacing, in m

(vi) In addition to (i) to (v) above, the net thickness t_{net} , in mm, of edge girders exposed to sea wash is not to be less than that obtained from the following formulae, whichever is greater:

$$t_{net} = 15.8S\sqrt{\frac{P_H}{0.95\sigma_F}}$$
$$t_{net} = 8.5S$$

where:

P_H	=	Design horizontal wave load, in kN/m^2, as specified in 17.2.4(b)
S	=	Stiffener spacing, in m
σ_F	=	Minimum upper yield stress or proof stress of the material, in N/mm^2

(vii) The moment of inertia, in cm^4, of the edge elements of hatch covers is not to be less than that obtained from the following formula:

$I = 6pa^4$

where:

a	=	Maximum of the distance a_i, in m, between two consecutive securing devices, measured along the hatch cover periphery, not to be taken as less than $2.5a_C$, in m (see Fig. II 17-2)
a_C	=	$\max(a_{1.1}, a_{1.2})$, in m (see Fig. II 17-2)
p	=	Packing line pressure, in N/mm, minimum 5.0 N/mm

When calculating the actual gross moment of inertia of edge elements, the effective breadth of the attached plating of hatch covers is to be taken as equal to the lesser of 0.165a, or half the distance between the edge element and the adjacent primary member.

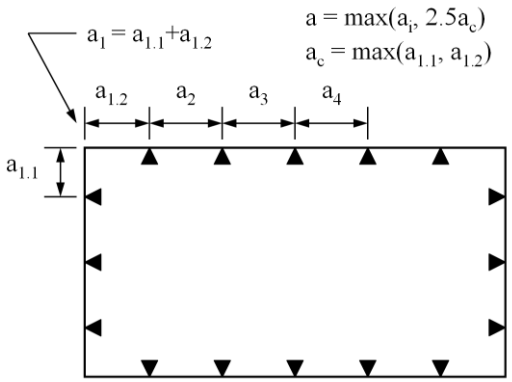

Fig. II 17-2
Distance between Securing Devices, Measured Along Hatch Cover Periphery

(e) Strength calculation

(i) Strength calculation for steel hatch covers may be carried out by either using beam theory, grillage analysis or FEM. Net scantlings are to be used for modeling. Strength calculations for double skin hatch covers or hatch covers with box girders are to be assessed using FEM, as specified in 17.2.5 (e)(iii) as below.

(ii) Effective cross-sectional properties for calculation by beam theory or grillage analysis are to be determined by the following (1) to (5):

(1) The effective breadth of the attached plating e_m of the primary supporting members specified in Table II 17-5 according to the ratio of *l* and e is to be considered for the calculation of effective cross-sectional properties. For intermediate values of *l*/e, e_m is to be obtained by linear interpolation.

(2) Separate calculations may be required for determining the effective breadth of one-sided or non-symmetrical flanges.

(3) The effective cross sectional areas of plates is not to be less than the cross sectional area of the face plate.

(4) The cross sectional area of secondary stiffeners parallel to the primary supporting member under consideration within the effective breadth may be included in the calculations (see Fig. II 17-4).

(5) For flange plates under compression with secondary stiffeners perpendicular to the web of the primary supporting member, the effective width is to be determined according to 17.2.5(f)(iii).

(iii) General requirements for FEM are as follows:

(1) The structural model is to be able to reproduce the behavior of the structure with the highest possible fidelity. Stiffeners and primary supporting members subject to pressure loads are to be included in the modelling. However, buckling stiffeners may be disregarded for stress calculation.

(2) Net scantlings which exclude corrosion additions are to be used for modeling.

(3) Element size is to be suitable to take effective breadth into account.

(4) In no case is element width to be larger than stiffener spacing. The ratio of element length to width is not to exceed 4.0.

(5) The element height of the webs of primary supporting members is not to exceed one-third of the web height.

(6) Stiffeners may be modelled using shell elements, plane stress elements or beam elements.

(f) Buckling strength of steel hatch covers

The buckling strength of the structural members of steel hatch covers is to be in accordance with the following (i) to (iii):

(i) The buckling strength of a single plate panel of the top and lower steel hatch cover plating is to comply with the following formulae:

$$\left(\frac{|\sigma_x|C_{sf}}{\kappa_x\sigma_F}\right)^{e_1} + \left(\frac{|\sigma_y|C_{sf}}{\kappa_y\sigma_F}\right)^{e_2} - B\left(\frac{\sigma_x\sigma_y C_{sf}^2}{\sigma_F^2}\right) + \left(\frac{|\tau|C_{sf}\sqrt{3}}{\kappa_\tau\sigma_F}\right)^{e_3} \leq 1.0$$

$$\left(\frac{|\sigma_x|C_{sf}}{\kappa_x\sigma_F}\right)^{e_1} \leq 1.0$$

$$\left(\frac{|\sigma_y|C_{sf}}{\kappa_y\sigma_F}\right)^{e_2} \leq 1.0$$

$$\left(\frac{|\tau|C_{sf}\sqrt{3}}{\kappa_\tau\sigma_F}\right)^{e_3} \leq 1.0$$

where:

σ_x, σ_y = Membrane stress in the x-direction and the y-direction, in N/mm^2. In cases where the stresses are obtained from FEM and already contain the Poisson-effect, the following modified stress values may be used. Both stresses σ_x^* and σ_y^* are to be compressive stress in order to apply stress reduction according to the following formulae:

$$\sigma_x = (\sigma_x^* - 0.3\sigma_y^*)/0.91$$
$$\sigma_y = (\sigma_y^* - 0.3\sigma_x^*)/0.91$$

where:

σ_x^*, σ_y^* = Stresses containing the Poisson-effect. These values are to comply with the following formulae:

$\sigma_y = 0$ and $\sigma_x = \sigma_x^*$ for $\sigma_y^* < 0.3\sigma_x^*$

$\sigma_x = 0$ and $\sigma_y = \sigma_y^*$ for $\sigma_x^* < 0.3\sigma_y^*$

where:

τ = Shear stress in x-y plane, in N/mm^2

σ_F = Minimum yield stress of the material, in N/mm^2
Compressive and shear stresses are to be taken as positive values and tension stresses are to be taken as negative values.

C_{sf} = Safety factor taken as equal to:
= 1.25 for hatch covers when subjected to design vertical wave loads according to 17.2.4(a)
= 1.10 for hatch covers when subjected to loads according to 17.2.4(b) to (e)

F_1 = Correction factor for the boundary condition of stiffeners on the longer side of elementary plate panels according to Table II 17-6

e_1, e_2, e_3 and B = Coefficient obtained from Table II 17-7

κ_x, κ_y and κ_τ = Reduction factor obtained from Table II 17-8. However, these values are to comply with the following formulae:

κ_x = 1.0 for $\sigma_x \leq 0$ (tensile stress)

κ_y = 1.0 for $\sigma_y \leq 0$ (tensile stress)

a = Length, in mm, of the longer side of the partial plate field (x-direction)

b = Length, in mm, of the shorter side of the partial plate field (y-direction)

n = Number of the elementary plate panel breadths within the partial or total plate panel (see Fig. II 17-3)

α = Aspect ratio of a single plate field obtained from the following formula:

$$\alpha = \frac{a}{b}$$

λ = Reference degree of slenderness, taken as equal to:

$$\lambda = \sqrt{\frac{\sigma_F}{K\sigma_e}}$$

K = Buckling factor according to Table II 17-8

σ_e = Reference stress, in N/mm^2, taken as equal to:

$$\sigma_e = 0.9E\left(\frac{t}{b}\right)^2$$

E = Modulus of elasticity, in N/mm^2 of the material, taken as equal to:

= 2.06×10^5

t = Net thickness, in mm, of plate under consideration

Ψ = Edge stress ratio taken as equal to:

$$\Psi = \frac{\sigma_2}{\sigma_1}$$

σ_1 = Maximum compressive stress, in N/mm^2

σ_2 = Minimum compressive stress or tension stress, in N/mm^2

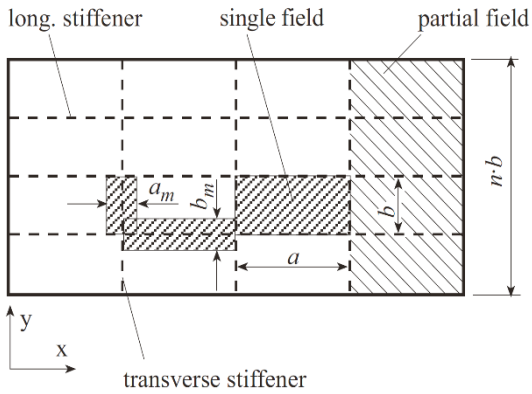

longitudinal : stiffener in the direction of the length a
transverse : stiffener in the direction of the breath b

Fig. II 17-3
General Arrangement of Panels

(ii) The buckling strength of non-stiffened webs and the flanges of primary supporting members are to be according to the requirement of (i) above.

(iii) The buckling strength of partial and total fields included in the structural members of steel hatch covers is to comply with the following (1) to (5):

(1) The buckling strength of longitudinal and transverse secondary stiffeners is to comply with following (4) and (5). For U-type stiffeners, however, the requirements in (5) below may be omitted.

(2) When buckling calculation is carried out according to (4) and (5), the effective breadth of steel hatch cover plating may be in accordance with following a) and b):

a) The effective breadth a_m or b_m of attached plating may be determined by the following formulae (see Fig. II 17-3). However, the effective breadth of plating is not to be taken greater than the value obtained from 17.2.5(e).

$b_m = \kappa_x b$ for longitudinal stiffeners
$a_m = \kappa_y a$ for transverse stiffeners

where:

κ_x, κ_y = As obtained from Table II 17-8

a , b = As specified (i) above

b) The effective breadth e'_m of the stiffened flange plates of primary supporting members may be determined according to the following i) and ii). However, a_m and b_m for flange plates are in general to determined for $\Psi = 1$.

i) Stiffening parallel to the webs of primary supporting members (see Fig. II 17-4). For $b \geq e_m$, b and a have to be exchanged.

$b < e_m$

$e'_m = nb_m$

where:

n = Integer number of stiffener spacing b inside the effective breadth e_m according to 17.2.5(e), taken as equal to:

$$n = \text{int}\left(\frac{e_m}{b}\right)$$

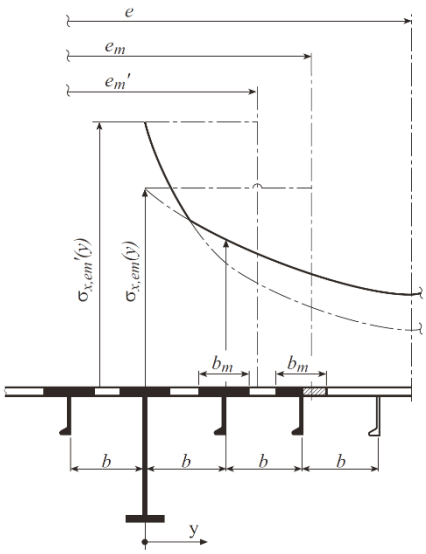

Fig. II 17-4
Stiffening Parallel to Web of Primary Supporting Member

ii) Stiffening perpendicular to the webs of primary supporting members (see Fig. II 17-5). For $a < e_m$, a and b have to be exchanged.

$a \geq e_m$

$e'_m = na_m < e_m$

$$n = 2.7\frac{e_m}{a} \leq 1$$

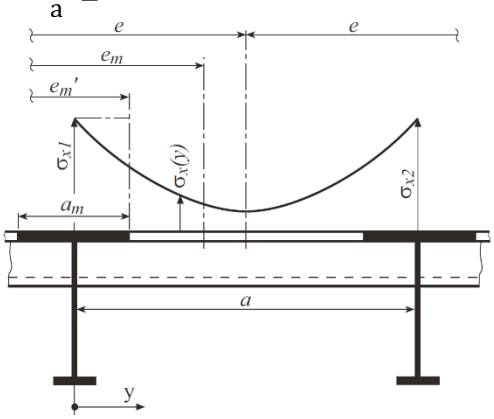

Fig. II 17-5
Stiffening Perpendicular to Web of Primary Supporting Member

(3) Stresses obtained from the calculation of the scantlings of plating and the stiffeners of steel hatch covers are to comply with the following:

a) The scantlings of plates and stiffeners are in general to be determined according to the maximum stresses $\sigma_x(y)$ at the webs of primary supporting members and stiffeners respectively.

b) For stiffeners with spacing b under compression arranged parallel to primary supporting members, no value less than $0.25\sigma_x$ is to be inserted for $\sigma_x(y = b)$.

c) The stress distribution between two primary supporting members may be obtained by the following formula:

$$\sigma_x(y) = \sigma_{x1}\left\{1 - \frac{y}{e}\left[3 + c_1 - 4c_2 - 2\frac{y}{e}(1 + c_1 - 2c_2)\right]\right\}$$

where:

c_1 = As given by the following formula:

$$c_1 = \frac{\sigma_{x1}}{\sigma_{x2}}, \text{however } 0 \le c_1 \le 1$$

c_2 = As given by the following formula:

$$c_2 = \frac{1.5}{e}\left(e''_{m1} + e''_{m2}\right) - 0.5$$

σ_{x1} and σ_{x2} = Normal stresses in the flange plates of adjacent primary supporting members 1 and 2 with spacing e, based on cross-sectional properties considering the effective breadth or effective width, as appropriate

e''_{m1} = Proportionate effective breadth e_{m1} or proportionate effective width e'_{m1} of primary supporting member 1 within the distance e, as appropriate

e''_{m2} = Proportionate effective breadth e_{m2} or proportionate effective width e'_{m2} of primary supporting member 2 within the distance e, as appropriate

d) The shear stress distribution in flange plates may be assumed to be linear.

(4) For lateral buckling, longitudinal and transverse stiffeners are to comply with following i) to iii):

a) Secondary stiffeners subject to lateral loads are to comply with the following criteria:

$$\frac{\sigma_a + \sigma_b}{\sigma_F} C_{sf} \le 1$$

where:

σ_a = Uniformly distributed compressive stress, in N/mm^2, in the direction of the stiffener axis, given by the following formula:

$\sigma_a = \sigma_x$ for longitudinal stiffeners

$\sigma_a = \sigma_y$ for transverse stiffeners

σ_b = Bending stress, in N/mm^2, in the stiffeners, given by the following formula:

$$\sigma_b = \frac{M_0 + M_1}{Z_{st}10^3} \text{ with } \sigma_x = \sigma_n \text{ and } \tau = \tau_{SF}$$

M_0 = Bending moment, in N-mm, due to deformation w of stiffener, given by the following formula:

$$M_0 = F_{Ki}\frac{p_z w}{c_f - p_z} \text{ with } (c_f - p_z) > 0$$

M_1 = Bending moment, in N-mm, due to lateral load P given by the following formula:

$$M_1 = \frac{pba^2}{24 \cdot 10^3} \text{ for longitudinal stiffeners}$$

$$M_1 = \frac{p(nb)^2}{8c_S 10^3} \text{ for transverse stiffeners}$$

Where n is to be taken as equal to 1 for ordinary transverse stiffeners

Z_{st} = Section modulus of stiffener, in cm^3, including the effective breadth of plating according to 17.2.5(f)(iii)

c_s = Factor accounting for the boundary conditions of the transverse stiffener taken as equal to:

= 1.0 for a stiffener that is simply supported stiffener

= 2.0 for a stiffener that is partially constrained

P = Lateral load, in N/mm^2, as specified in 17.2.4 according to the condition under consideration

F_{Ki} = Ideal buckling force, in N, of the stiffener given by the following formula:

= $F_{Kix} = \frac{\pi^2}{a^2} EI_x 10^4$ for longitudinal stiffeners

= $F_{Kiy} = \frac{\pi^2}{(nb)^2} EI_y 10^4$ for transverse stiffeners

I_x, I_y = Net moments of inertia, in cm^4, of the longitudinal or transverse stiffener, including the effective breadth of attached plating according to 17.2.5(f)(iii). I_x and I_y, are to comply with the following criteria:

$$I_x \geq \frac{bt^3}{12 \cdot 10^4}$$

$$I_y \geq \frac{at^3}{12 \cdot 10^4}$$

p_z = Nominal lateral load, in N/mm^2, of the stiffener due to σ_x, σ_y and τ

$$p_{zx} = \frac{t_a}{b}\left[\sigma_{x1}\left(\frac{\pi b}{a}\right)^2 + 2c_y\sigma_y + \tau_1\sqrt{2}\right] \text{ for longitudinal stiffeners}$$

$$p_{zy} = \frac{t_a}{b}\left[2c_x\sigma_{x1} + \sigma_y\left(\frac{\pi a}{nb}\right)^2\left(1 + \frac{A_y}{at_a}\right) + \tau_1\sqrt{2}\right] \text{ for transverse stiffeners}$$

t_a = Net thickness, in mm, of attached plate

c_x and c_y = Factor taking into account the stresses vertical to the stiffener's axis and distributed variable along the stiffener's length taken as equal to:

= $0.5(1 + \Psi)$ for $0 \leq \Psi \leq 1$

= $\frac{0.5}{1 - \Psi}$ for $\Psi < 0$

A_x and A_y = Net sectional area, in mm^2, of the longitudinal or transverse stiffener respectively without attached plating

$$\sigma_{x1} = \sigma_x\left(1 + \frac{A_x}{bt_a}\right)$$

$$\tau_1 = \left[\tau - t\sqrt{\sigma_F E\left(\frac{m_1}{a^2} + \frac{m_2}{b_2}\right)}\right] \geq 0$$

m_1 and m_2 = Coefficient given by the following formulae:

For longitudinal stiffeners:

$m_1 = 1.47 \;\; m_2 = 0.49$ for $\frac{a}{b} \geq 2.0$

$m_1 = 1.96 \;\; m_2 = 0.37$ for $\frac{a}{b} < 2.0$

For transverse stiffeners:

$m_1 = 0.37 \;\; m_2 = \frac{1.96}{n^2}$ for $\frac{a}{nb} \geq 0.5$

$m_1 = 0.49 \;\; m_2 = \frac{1.47}{n^2}$ for $\frac{a}{nb} < 0.5$

w = $w_0 + w_1$

w_0 = Assumed imperfection, in mm, taken as equal to:

$$w_0 = \min\left(\frac{a}{250}, \frac{b}{250}, 10\right) \text{ for longitudinal stiffeners}$$

$$w_0 = \min\left(\frac{a}{250}, \frac{nb}{250}, 10\right) \text{ for transverse stiffeners}$$

For stiffeners sniped at both ends w_0 is not to be taken as less than the distance from the mid-point of attached plating to the neutral axis of the stiffener calculated with the effective width of its attached plating

w_1 = Deformation of stiffener, in mm, at the mid-point of stiffener span due to lateral load P. In the case of uniformly distributed loads, the following values for w_1 may be used:

$$w_1 = \frac{Pba^4}{384 \cdot 10^7 EI_x} \text{ for longitudinal stiffeners}$$

$$w_1 = \frac{5Pa(nb)^4}{384 \cdot 10^7 EI_y c_s^2} \quad \text{for transverse stiffeners}$$

c_f = Elastic support, in N/mm², provided by the stiffener taken as equal to:

For longitudinal stiffeners:

$$c_f = F_{Kix} \frac{\pi^2}{a^2} \left(1 + c_{px}\right)$$

$$c_{px} = \frac{1}{1 + \frac{0.91\left(\frac{12 \cdot 10^4 I_x}{t^3 b} - 1\right)}{c_{xa}}}$$

c_{xa} = Coefficient taken as equal to:

$$c_{xa} = \left(\frac{a}{2b} + \frac{2b}{a}\right)^2 \quad \text{for } a \geq 2b$$

$$c_{xa} = \left[1 + \left(\frac{a}{2b}\right)^2\right]^2 \quad \text{for } a < 2b$$

For transverse stiffeners:

$$c_f = c_s F_{Kiy} \frac{\pi^2}{(n \cdot b)^2} \left(1 + c_{py}\right)$$

$$c_{py} = \frac{1}{1 + \frac{0.91\left(\frac{12 \cdot 10^4 I_y}{t^3 b} - 1\right)}{c_{ya}}}$$

c_{ya} = Coefficient taken as equal to:

$$c_{ya} = \left(\frac{nb}{2a} + \frac{2a}{nb}\right)^2 \quad \text{for } nb \geq 2a$$

$$c_{ya} = \left[1 + \left(\frac{nb}{2a}\right)^2\right]^2 \quad \text{for } nb < 2a$$

b) For stiffeners not subject to lateral loads, the bending moment σ_b is to be calculated at the mid-point of the stiffener.

c) When lateral loads are acting, stress calculations are to be carried out for both fibers of the stiffener's cross sectional area (if necessary for the biaxial stress field at the plating side).

(5) For torsional buckling, longitudinal and transverse stiffeners are to comply with the following a) to b):

a) Longitudinal stiffeners are to comply with the following criteria:

$$\frac{\sigma_x}{\kappa_T \sigma_F} C_{sf} \leq 1.0$$

where:

κ_T = Coefficient taken as equal to:

$$\kappa_T = 1.0 \quad \text{for } \lambda_T \leq 0.2$$

$$\kappa_T = \frac{1}{\Phi + \sqrt{\Phi^2 - \lambda_T^2}} \quad \text{for } \lambda_T > 0.2$$

$$\Phi = 0.5[1 + 0.21(\lambda_T - 0.2) + \lambda_T^2]$$

λ_T = Reference degree of slenderness taken as equal to:

$$\lambda_T = \sqrt{\frac{\sigma_F}{\sigma_{KiT}}}$$

$$\sigma_{KiT} = \frac{E}{I_p}\left(\frac{\pi^2 I_\omega 10^2}{a^2}\varepsilon + 0.385 I_T\right) \quad \text{N/mm}^2$$

I_P = Net polar moment of inertia of the stiffener, in cm⁴, defined in Table II 17-9, and related to point C as shown in Fig. II 17-6

I_T = Net St. Venant's moment of inertia of the stiffener, in cm⁴, defined in Table II 17-9

I_ω = Net sectorial moment of inertia of the stiffener, in cm⁶, defined in Table II 17-9, related to point C as shown in Fig. II

17-6

ε = Degree of fixation taken as equal to:

$$\varepsilon = 1 + 10^{-3}\sqrt{\frac{a^4}{\frac{3}{4}\pi^4 I_w\left(\frac{b}{t^3}+\frac{4h_w}{3t_w^3}\right)}}$$

A_w = Net web area, in mm², equal to:
$A_w = h_w t_w$

A_f = Net flange area, in mm², equal to:
$Af = b_f t_f$

$$e_f = h_w + \frac{t_f}{2} \quad \text{mm}$$

h_w, t_w, b_f and t_f = Dimensions of stiffener, in mm, as specified in Fig. II 17-6

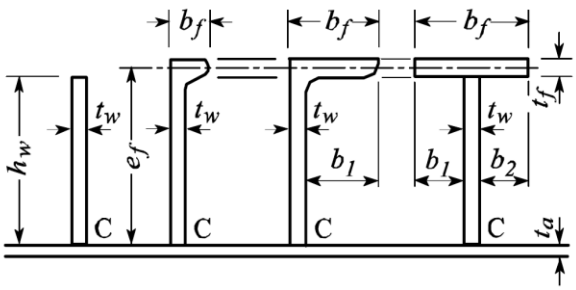

Fig. II 17-6
Dimensions of Stiffener

b) For transverse secondary stiffeners loaded by compressive stress which are not supported by longitudinal stiffeners, sufficient torsional buckling strength is to be performed analogously in accordance with a) above.

17.2.6 Additional Requirements for Steel Hatch Covers Carrying Cargoes

(a) Where concentrated loads, e.g. container loads, are acting on steel hatch covers, direct calculations deemed appropriate by the Society are required.

(b) The scantlings of sub structures subject to concentrated loads acting on steel hatch covers are to be determined taking into consideration the design cargo loads and permissible stresses specified in this section.

(c) The scantlings of top plates and stiffeners of steel hatch covers subject to wheel loads are determined by direct calculation or any other method which deemed appropriate by the Society.

17.2.7 Portable Beams, Hatchway Covers, Steel Pontoon Covers and Steel Weathertight Covers

(a) Portable beams are to comply with the following (i) to (vii):

(i) The carriers and sockets for portable beams are to be of substantial construction, having a minimum bearing surface of 75 mm, and are to be provided with means for the efficient fitting and securing of the beams.

(ii) Coamings are to be stiffened in way of carriers and sockets by providing stiffeners from these fittings to the deck or by equivalent strengthening.

(iii) Where beams of a sliding type are used, the arrangement is to ensure that the beams remain properly in position when the hatchway is closed.

(iv) The depth of portable beams and the width of their face plates are to be suitable to ensure the lateral stability of the beams. The depth of beams at their ends is not to be less than 0.40 times the depth at their mid-point or 150 mm, whichever is greater.

(v) The upper face plates of portable beams are to extend to the ends of the beams. The web plates are to be increased in thickness to at least twice that at the mid-point for at least 180 mm from each end or to be reinforced with doubling plates.

(vi) Portable beams are to be provided with suitable gear for releasing them from slings without the need for personnel to get on the beam.

(vii) Portable beams are to be clearly marked to indicate the deck, hatchway and position to which they belong.

(b) Hatchway covers are to comply with the following (i) to (v):

(i) Hatch rests are to be provided with at least a 65 mm bearing surface and are to be beveled, if required, to suit the slope of the hatchways.

(ii) Hatchway covers are to be provided with suitable hand grips according to their weight and size, except where such grips are unnecessary due to the cover's construction.

(iii) Hatchway covers are to be clearly marked to indicate the deck, hatchway and position to which they belong.

(iv) The wood for hatchway covers is to be of good quality, straight grained and reasonably free from knots, sap and shakes.

(v) The ends of all wood covers are to be protected by an encircling steel band.

(c) Steel pontoon covers are to comply with the following (i) to (iii):

(i) The depth of steel pontoon covers at the supports is not to be less than one-third the depth at the mid-point or 150 mm, whichever is greater.

(ii) The width of the bearing surfaces for steel pontoon covers is not to be less than 75 mm.

(iii) Steel pontoon covers are to be clearly marked to indicate the deck, hatchway and position to which they belong.

(d) Steel weathertight covers are to comply with the following:

(i) The depth of steel weathertight covers at the supports is not to be less than 1/3 the depth at the mid-point or 150 mm, whichever is greater.

17.2.8 Tarpaulins and Securing Arrangements for Hatchways Closed by Portable Covers

(a) At least two layers of tarpaulins are to be provided for each exposed hatchway on the freeboard or superstructure decks and at least one layer of such a tarpaulin is to be provided for each exposed hatchway elsewhere.

(b) Battens are to be efficient for securing the tarpaulins and not to be less than 65 mm in width and 9 mm in thickness.

(c) Wedges are to be of tough wood or other equivalent materials. They are to have a taper not more than 1/6 and not to be less than 13 mm in thickness at the point.

(d) Cleats are to be set to fit the taper of the wedges. They are to be at least 65 mm wide and to be spaced not more than 600 mm from centre to centre; the cleats along each side are to be arranged not more than 150 mm apart from the hatch corners.

(e) For all hatchways in exposed freeboard and superstructure decks, steel bars or other equivalent means are to be provided in order to efficiently secure each section of the hatchway cover after the tarpaulins are battened down. Hatchway covers of more than 1.5 meters in length are to be secured by at least two such securing appliances. At all other hatchways in exposed positions on weather decks, ring bolts or other suitable fittings for lashing are to be provided.

17.2.9 Hatch Coaming Strength Criteria

(a) Height of coamings is to comply with following (i) to (iii):

(i) Height of coamings above the upper surface of the deck is to be at least 600 mm in Position 1 and 450 mm in Position 2.

(ii) For hatchways closed by weathertight steel hatch covers, the height of coamings may be reduced from that prescribed in (i) or omitted entirely subject to the satisfaction of the Society.

(iii) The height of hatchway coamings other than those provided in exposed portions of the freeboard or superstructure decks is to be to the satisfaction of the Society having regard to the position of hatchways or the degree of protection provided.

(b) Scantlings of hatch coamings are to be in accordance with the followings.

(i) The local net plate thickness, in mm, of the hatch coaming plating $t_{coam,net}$, is not to be less than that obtained from following formula:

$$t_{coam,net} = 14.2S\sqrt{\frac{P_H}{\sigma_{a,coam}}}, \text{but not to be less than } 6 + \frac{L'}{100}$$

where:

S	=	Secondary stiffener spacing, in m
P_H	=	As specified in 17.2.4(b)
$\sigma_{a,coam}$	=	$0.95\sigma_F$
σ_F	=	Minimum upper yield stress or proof stress of the material, in N/mm^2.
L'	=	Length of ship L, in m. However, where L' exceeds 300 m, L' is to be taken as 300 m.

(ii) Where the hatch coaming secondary stiffener is snipped at both ends, the gross thickness $t_{coam,gross}$, in mm, of the coaming plate at the sniped stiffener end is not to be less than that obtained from the following formula:

$$t_{coam,gross} = 19.6\sqrt{\frac{P_H S(l - 0.5S)}{\sigma_F}}$$

where:

l	=	secondary stiffener span, in m, to be taken as the spacing of coaming stays
S, P_H and σ_F	=	As specified in (i) above

(iii) The net section modulus Z_{net}, in cm^3, and net shear area, in cm^2, of hatch coaming secondary stiffeners are not to be less than that obtained from the following formula. For snipped stiffeners at coaming corners, section modulus and shear area at the fixed support are to be increased by 35%.

$$Z_{net} = \frac{83Sl^2P_H}{\sigma_F}$$

$$A_{net} = \frac{10SlP_H}{\sigma_F}$$

where:

S, P_H and σ_F	=	As specified in (ii) above

(iv) Buckling strength assessment of hatch coaming is to be carried out by the method as deemed appropriate by the Society.

(v) The net scantlings of hatch coaming stays are to be in accordance with following (1) to (3):

(1) For hatch coaming stays considered to be simple beams (see Examples a. and b. of Fig. II 17-7 of this Chapter), the net section modulus Z_{net} (cm^3) of such stays at their deck connections and the net scantling t_{net} (mm) of their webs are not to be less than that obtained from following formulae:

$$Z_{net} = \frac{526H_C^2SP_H}{\sigma_F}$$

$$t_{w,net} = \frac{2H_C S P_H}{\sigma_F h}$$

where:

H_C	=	Hatch coaming stay height, in m
h	=	Hatch coaming stay depth, in m
S	=	Hatch coaming stay spacing, in m
σ_F and P_H	=	As specified in (i) above

(2) For coaming stays other than those in (1) above (see Examples c. and d. of Fig. II 17-7 of this Chapter), stresses are generally to be determined through grillage analysis or FEM, and the calculated stresses are to satisfy the permissible stress criteria of 17.2.5 (a) of this Chapter.

(3) For calculating the net section modulus of coaming stays, the area of their face plates is to be taken into account only when it is welded with full penetration welds to the deck plating and an adequate underdeck structure is fitted to support the stresses transmitted by them.

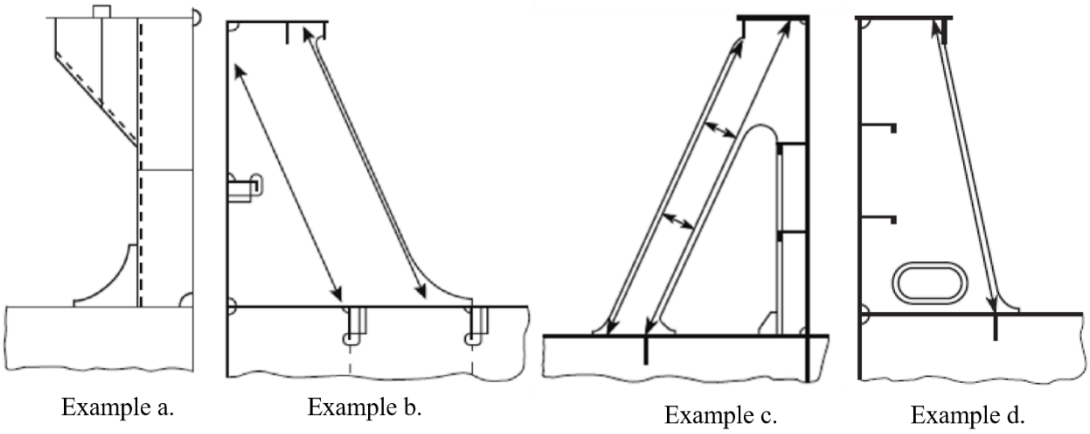

Fig. II 17-7
Examples of Coaming Stays

(c) The coamings for hatchways in Position 1 or coamings of 760 mm or more in height for hatchways in Position 2 are to be stiffened in a suitable position below the upper edge by a horizontal stiffener; the breadth of the horizontal stiffener is not to be less than 180 mm.

(d) Coamings are to be additionally supported by efficient brackets or stays provided from the horizontal stiffeners specified in (c) to the deck at intervals of approximately 3 meters.

(e) Coaming plates are to extend to the lower edge of the deck beams; moreover, they are to be flanged or fitted with face bars or half-round bars (see Fig. II 17-8 of this Chapter), except where specially approved by the Society.

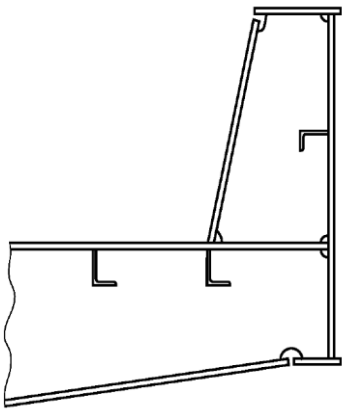

Fig. II 17-8
Example for the Extension of Coaming Plates

(f) Hatch coamings and hatch coaming stays are to comply with the following requirements:

(i) The local details of the structures are to be designed so as to transfer pressures on the hatch covers to the hatch coamings and, through them, to the deck structures below. Hatch coamings and supporting structures are to be adequately stiffened to accommodate the loading from hatch covers, in longitudinal, transverse and vertical directions.

(ii) Underdeck structures are to be checked against the load transmitted by the stays.

(iii) Double continuous welding is to be adopted for the connections of stay webs with deck plating and the weld throat is to be not less than $0.44t_{w,gross}$, where $t_{w,gross}$ is the gross thickness of the stay web.

(iv) The toes of stay webs are to be connected to deck plating with deep penetration double bevel welds extending over a distance not less than 15% of the stay width.

(v) On ships carrying cargoes such as timber, coal or coke on deck, stays are to be spaced not more than 1.5 m apart.

(vi) Hatch coaming stays are to be supported by appropriate substructures.

(vii) For hatch coamings that transfer friction forces at hatch cover supports, special consideration is to be given to fatigue strength.

(viii) Longitudinal hatch coamings with a length exceeding $0.1L_1$ are to be provided with tapered brackets or equivalent transitions and a corresponding substructure at both ends. At the end of the brackets, they are to be connected to the deck by full penetration welds of minimum 300 mm in length.

(ix) Hatch coamings and horizontal stiffeners on hatch coamings may be considered as a part of the longitudinal hull structure when designed according to the requirements for longitudinal strength and verified in cases deemed appropriate by the Society.

(x) Unless otherwise specified, the material and welding requirements for hatch coamings are to comply with the provisions of Part XI and XII of the Rules for Steel Ships.

17.2.10 Closing Arrangements

(a) Securing devices

(i) Securing devices between covers and coamings and at cross-joints are to ensure weathertightness.

(ii) The means for securing and maintaining weathertightness by using gaskets and securing devices are to comply with the following (1) to (6). The means for securing and maintaining weathertightness of weathertight covers are to be to the satisfaction of the Society. Arrangements are to ensure that weathertightness can be maintained in any sea condition.

(1) The weight of covers and any cargo stowed thereon are to be transmitted to the ship structure through steel to steel contact.

(2) Gaskets and compression flat bars or angles which are arranged between covers and the ship structure and cross-joint elements are to be in compliance with the following a) to c):

a) Compression bars or angles are to be well rounded where in contact with the gaskets and are to be made of corrosion-resistant materials.

b) The gaskets are to be of relatively soft elastic materials. The material is to be of a quality suitable for all environmental conditions likely to be experienced by the ship, and is to be compatible with the cargoes carried.

c) A continuous gasket is to be effectively secured to the cover. The material and form of gasket selected are to be considered in conjunction with the type of cover, the securing arrangement and the expected relative movement between the cover and ship structure.

(3) Securing devices attached to hatchway coamings, decks or covers are to be in compliance with the following a) to e):

a) Arrangement and spacing of securing devices are to be determined with due attention to the effectiveness for weathertightness, depending upon the type and the size of hatch cover as well as to the stiffness of the cover edges between the securing devices.

b) The gross sectional area, in cm^2, of each securing device is not to be less than that obtained from the following formula. However, rods or bolts are to have a net diameter not less than 19 mm for hatchways exceeding 5 m^2 in area.

$$A = 0.28\bar{a}p/f$$

where:

$\bar{a}$	=	Half the distance, in m, between two adjacent securing devices, measured along the hatch cover periphery (see Fig. II 17-2)
P	=	Packing line pressure, in N/mm, minimum 5 N/mm
f	=	As obtained from the following formula: $f=(\sigma_F/235)^e$
σ_F	=	Minimum upper yield stress, in N/mm^2, of the steel used for fabrication, but not to be taken greater than 70% of the ultimate tensile strength
e	=	Coefficient taken as equal to:
	=	1.0 for $\sigma_F \leq 235$ N/mm^2
	=	0.75 for $\sigma_F > 235$ N/mm^2

c) Individual securing devices on each cover are to have approximately the same stiffness characteristics.

d) Where rod cleats are fitted, resilient washers or cushions are to be incorporated.

e) Where hydraulic cleating is adopted, a positive means is to be provided to ensure that it remains mechanically locked in the closed position in the event of failure of the hydraulic system.

(4) A drainage arrangement equivalent to the standards specified in the following is to be provided.

a) Drainage is to be arranged inside the line of gaskets by means of a gutter bar or vertical extension of the hatch side and end coaming.

c) Drain openings are to be arranged at the ends of drain channels and are to be provided with effective means such as non-return valves or the equivalent for preventing the ingress of water from outside.

c) Cross-joints of multi-panel covers are to be arranged with a drainage channel for water from space above the gasket and a drainage channel below the gasket.

d) If a continuous outer steel contact between cover and ship structure is arranged, drainage from the space between the steel contact and the gasket is also to be provided.

(5) It is recommended that ships with steel weathertight covers are supplied with an operation and maintenance manual which includes the following a) to e):

a) Opening and closing instructions

b) Maintenance requirements for packing, securing devices and operating items

c) Cleaning instructions for drainage systems

d) Corrosion prevention instructions

e) List of spare parts

(6) Securing devices of special design in which significant bending or shear stresses occur may be designed as anti-lifting devices according to (b) below.

(b) The securing devices of hatch covers, on which cargo is to be lashed, are to be designed for a lifting force resulting from the loads according to 17.2.4(d) of this Chapter (see Fig. II 17-9 of this Chapter). Unsymmetrical loading, which may occur in practice, is to be considered. Under such loading, the equivalent stress, in N/mm^2, in securing devices is not to be greater than that obtained from the following formula. Anti-lifting devices may be dispensed with at the discretion of the Society.

$$\sigma_E = \frac{150}{k_l}$$

where:

k_l = As obtained from the following formula:

$$k_l = \left(\frac{235}{\sigma_F}\right)^e$$

σ_F = Minimum upper yield stress or proof stress of the material, in N/mm^2
e = As given below:
= 0.75 for $\sigma_F > 235$
= 1.00 for $\sigma_F \leq 235$

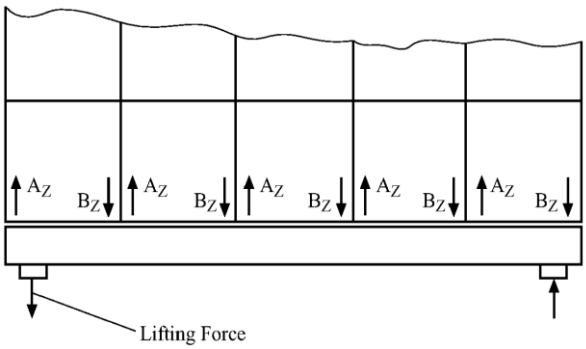

Fig. II 17-9
Lifting Forces at a Hatch Cover

17.2.11 Hatch Cover Supports, Stoppers and Supporting Structures

Hatch cover supports, stoppers and supporting structures subject to the provisions of 17.2 of this Chapter are to comply with the following (a) to (c):

(a) For the design of the securing devices for the prevention of shifting, the horizontal mass forces F obtained from the following formula are to be considered. Acceleration in the longitudinal direction, a_x, and in the transverse direction, a_y, does not need to be considered as acting simultaneously.

F = ma

where:
m = Sum of mass of cargo lashed on the hatch cover and mass of hatch cover
a = Acceleration obtained from the following formula:
= a_x=0.2g for longitudinal direction
= a_y=0.5g for transverse direction

(b) The design load for determining the scantlings of stoppers is not to be less than that obtained from 17.2.4(b) and (a), whichever is greater. Stress in the stoppers is to comply with the criteria specified in 17.2.5(a)(i).

(c) The details of hatch cover supporting structures are to be in accordance with the following (i) to (vii):

(i) The nominal surface pressure, in N/mm^2, of a hatch cover is not to be greater than that obtained from the following formula:

$p_{n\,max} = dp_n$ in general
$p_{n\,max} = 3p_n$ for metallic supporting surface not subjected to relative displacements

where:
d = As given by the following formula. Where d exceeds 3, d is to be taken as 3.
= 3.75-0.015L
d_{min} = 1.0 in general
= 2.0 for partial loading conditions
L = Length of ship specified in 1.2.1 of this Part.
p_n = As obtained from Table II 17-10

(ii) Where large relative displacements of the supporting surfaces are to be expected, the use of material having low wear and frictional properties is recommended.

(iii) Drawings of the supports are to be submitted. In these drawings, the permitted maximum pressure given by the material manufacturer related to long time stress is to be specified.

(iv) When the manufacturer of the vertical hatch cover support material can provide proof that the material is sufficient for the increased surface pressure, not only statically but under dynamic conditions, the permissible nominal surface pressure $p_{n\,max}$, as specified in (i) above, may be relaxed at the discretion of the Society. However, realistic long term distributions of spectra for vertical loads and relative horizontal motion between hatch covers and hatch cover stoppers are to be as deemed appropriate by the Society.

(v) Irrespective of the arrangement of stoppers, the supports are to be able to transmit the following force p_h in the longitudinal and transverse direction.

$$p_h = \mu \frac{p_v}{\sqrt{d}}$$

where:

p_v = Vertical supporting force

μ = Friction coefficient generally to be taken as 0.5. For non-metallic or low-friction materials, the friction coefficient may be reduced as appropriate by the Society. However, in no case μ is to be less than 0.35.

(vi) Stresses in supporting structures are to comply with the criteria specified in 17.2.5(a)(i).

(vii) For substructures and adjacent constructions of supports subjected to horizontal forces p_h, special consideration is to be given to fatigue strength.

17.2.12 Additional Requirement for Small Hatches Fitted on Exposed Fore Deck

Small hatches located on exposed decks forward of $0.25L_1$ are to be of sufficient strength and weathertightness to resist green sea force if the height of the exposed deck in way of those hatches is less than $0.1L_1$ or 22 m above the designed maximum load line, whichever is smaller. The length L_1 is the length, in m, of ship as specified in 1.2.1 or 0.97 times the length of ship on the designed maximum load line, whichever is smaller.

17.3 Machinery Space Openings

17.3.1 Protection of Machinery Space Openings

Machinery space openings are to be enclosed by steel casings.

17.3.2 Exposed Machinery Space Casings

(a) Exposed machinery space casings are to have scantlings not less than that those required in 12.3 of this Part, taking the c-value as 1.0.

(b) The thickness of the top plating of exposed machinery space casings is not to be less than that obtained from the following formulae:

Position 1 = 6.3S + 2.5 mm
Position 2 = 6.0S + 2.5 mm

where:

S = Spacing of stiffeners, in m

17.3.3 Machinery Space Casings below Freeboard Deck or within Enclosed Spaces

The scantlings of machinery space casings below the freeboard deck or within enclosed superstructures or deckhouses are to comply with the following requirements:

(a) The thickness of the plating is to be at least 6.5 mm; where the spacing of stiffeners is greater than 760 mm, the thickness is to be increased at the rate of 0.5 mm per 100 mm excess in spacing. In accommodation spaces, the thickness of the plating may be reduced by 2 mm.

(b) The section modulus of stiffeners is not to be less than that obtained from the following formula:

$1.2Sl^3$ cm^3

where:

l = Tween deck height, in m.

S = Spacing of stiffeners, in m.

17.3.4 Access Openings to Machinery Spaces

(a) All access openings to machinery spaces are to be located in protected positions as far as possible and provided with steel doors capable of being closed and secured from both sides. Such doors in exposed machinery casings on the freeboard deck are to comply with the requirements in 12.4.2 and 12.4.3.

(b) The sills of doorways in machinery casings are not to be less than 600 mm in height above the upper surface of the deck in Position 1 and 380 mm in Position 2.

(c) In ships having a reduced freeboard, doorways in the exposed machinery casings on the freeboard or raised quarter deck are to lead to a space or passageway which is of a strength equivalent to that of the casing and is separated from the stairway to the machinery spaces by a second steel weathertight door of which the doorway sill is to be at least 230 mm in height.

17.3.5 Miscellaneous Openings in Machinery Casings

(a) Coamings of any fiddley, funnel and machinery space ventilator in an exposed position on the freeboard or superstructure deck are to be as high above the deck as reasonable and practicable.

(b) In exposed positions on the freeboard and superstructure decks, fiddley openings and all other openings in the machinery casings are to be provided with strong steel weathertight covers permanently fitted in their proper positions.

(c) Annular spaces around funnels and all other openings in the machinery casings are to be provided with a means of closing capable of being operated from outside the machinery space in case of fire.

17.3.6 Machinery Casings within Unenclosed Superstructures or Deckhouses

Machinery casings within unenclosed superstructures or deckhouses and doors provided thereon are to be constructed to the satisfaction of the Society, having regard to the degree of protection afforded by the superstructure or deckhouse.

17.4 Companionways and Other Deck Openings

17.4.1 Manholes and Flush Deck Openings

Manholes and flush deck openings in exposed positions on the freeboard and superstructure decks or within superstructures other than enclosed superstructures are to be closed by steel covers capable of being made watertight. These covers are to be secured by closely spaced bolts or to be permanently fitted.

17.4.2 Companionways

(a) Access openings in the freeboard deck are to be protected by enclosed superstructures, or by deckhouses or companionways of equivalent strength and weathertightness.

(b) Access openings in exposed superstructure decks or in the top of deckhouses on the freeboard deck which give access to a space below the freeboard deck or a space within an enclosed superstructure are to be protected by efficient deckhouses or companionways.

(c) Doorways in deckhouse or companionways such as specified in (a) and (b) are to be provided with doors complying with the requirements in 12.4.2 and 12.4.3 of this Part.

(d) The sills of doorways in companionways specified in (a) to (c) are not to be less than 600 mm in height above the upper surface of the deck in Position 1 and 380 mm in Position 2.

(e) For deckhouses or superstructures which protect access openings to spaces below the freeboard deck, the height of sills of doorways on the freeboard deck are not to be less than 600 mm. However, where access is provided from the deck above as an alternative to access from the freeboard deck, the height of sills into a bridge or poop or deckhouse may be reduced to 380 mm.

(f) Where the access openings in superstructures and deckhouses which protect access openings to spaces below the freeboard deck do not have closing appliances in accordance with the requirements of 12.4.2 and 12.4.3 of this Part, the openings to spaces below the freeboard deck are to be considered exposed.

17.4.3 Openings to Cargo Spaces

Access and other openings to cargo spaces are to be provided with a means of closing capable of being operated from outside the spaces in case of fire. Such closing means for any opening leading to any other space inboard the ship is to be of steel.

Table II 17-1
Corrosion Additions

Type of ship	Type of structural member		Corrosion addition t_c ,in mm
Ships subject to the application of this section	Single plating type hatch cover		2.0
	Double plating type hatch cover	Top, side and bottom plating	1.5
		Internal structures	1.0
	Hatchway coamings, hatch coaming stays and stiffeners		1.5

Table II 17-2
Design Vertical Wave Load P_V(1), (2) (kN/m²)

		$L_f \leq 100m$	$L_f > 100m$
Position 1	For $0.25L_f$ forward	$\frac{9.81}{76}\left[(4.28L_f + 28)\frac{x}{L_f} - 1.71L_f + 95\right]$(3)	For type B ships according to ICLL(4): $9.81\left[(0.0296L'_f + 3.04)\frac{x}{L_f} - 0.0222L'_f + 1.22\right]$ For type B-60 and B-100 ships according to ICLL(4): $9.81\left[(0.1452L'_f - 8.52)\frac{x}{L_f} - 0.1089L'_f + 9.89\right]$
	Elsewhere	$\frac{9.81}{76}(1.5L_f + 116)$	9.81×3.5
Position 2		$\frac{9.81}{76}(1.1L_f + 87.6)$	9.81×2.6(5)

Notes:
(1) L_f : Length of ship for freeboard defined in 1.2.10 of this Part, in m
L'_f: L_f, in m, however, where L_f exceeds 340 m, L'_f is to be taken as 340 m
x : Distance, in m, of the mid length of the hatch cover under examination from the aft end of L_f
(2) For exposed hatchways in positions other than Position 1 or 2, the value of each design wave load will be specially considered.
(3) Where a Position 1 hatchway is located at least one superstructure standard height higher than the freeboard deck, P_V may be taken as $\frac{9.81}{76}(1.5L_f + 116)$, in kN/m².
(4) Where a Position 1 hatchway is located at least one superstructure standard height higher than the freeboard deck, P_V may be taken as 9.81×3.5, in kN/m².
(5) Where a Position 1 hatchway is located at least one superstructure standard height higher than the Position 2 deck, P_V may be taken as 9.81×2.1, in kN/m².

Table II 17-3
Minimum Value of P_H , in kN/m²

	Unprotected front coamings and hatch cover skirt plates	others
$L \leq 250$	$25 + \frac{L_1}{10}$	$12.5 + \frac{L_1}{20}$
$L > 250$	50	25

Table II 17-4
Coefficient k_1 and k_2

k_1	$1 + \frac{3.2\alpha - \gamma - 0.8}{7\gamma + 0.4}$	k_1 is not to be taken as less than 1.0 $\alpha = \frac{l_1}{l}$ $\beta = \frac{I_1}{I_0}$ $\gamma = \frac{Z_1}{Z_0}$
k_2	$1 + 8\alpha^3 \frac{1 - \beta}{0.2 + 3\sqrt{\beta}}$	

l = Overall length of portable beam, in m

l_1= Distance from the end of parallel part to the end of portable beam, in m

I_0= Moment of inertia at mid-span, in cm^4

I_1= Moment of inertia at ends, in cm^4

Z_0= Section modulus at mid-span, in cm^3

Z_1= Section modulus at ends, in cm^3

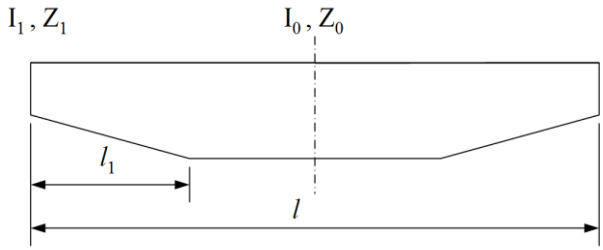

Table II 17-5
Effective Breadth e_m of Plating of Primary Supporting Members

l/e	0	1	2	3	4	5	6	7	≥ 8
e_{m1}/e	0	0.36	0.64	0.82	0.91	0.96	0.98	1.00	1.00
e_{m2}/e	0	0.20	0.37	0.52	0.65	0.75	0.84	0.89	0.90

Notes:

e_{m1} = Effective breadth, in mm, to be applied where primary supporting members are loaded by uniformly distributed loads or by not less than 6 equally spaced single loads

e_{m2} = Effective breadth, in mm, to be applied where primary supporting members are loaded by 3 or less single loads

l = Length between zero-points of bending moment curve taken equal to:
For simply supported primary supporting members: l_0
For primary supporting members with both ends constant: $0.6l_0$

l_0 = Unsupported length of the primary supporting members

e = Width of plating supported, measured from centre to centre of the adjacent unsupported fields

Table II 17-6
Correction Factor F_1

Boundary condition	F_1(2)	Edge stiffener
Stiffeners sniped at both ends	1.00	
Guidance value(1) where both ends are effectively connected to adjacent structures	1.05	Flat bars
	1.10	Bulb sections
	1.20	Angles and tee-sections
	1.30	U-type sections(3) and girders of high rigidity

Notes:

(1) Exact values may be determined by direct calculations

(2) An average value of F_1 is to be used for plate panels having different edge stiffeners

(3) A higher value may be taken if it is verified by a buckling strength check of the partial plate field using non-linear FEA and deemed appropriate by the Society. However,such values are not to be greater than 2.0

Table II 17-7
Coefficient e_1, e_2, e_3 and B

Exponents e_1, e_2, e_3 and B		Plate panel
e_1		$1+\kappa_x^4$
e_2		$1+\kappa_y^4$
e_3		$1+\kappa_x\kappa_y\kappa_\tau^2$
B	For σ_x and σ_y positive (compressive stress)	$(\kappa_x\kappa_y)^5$
	For σ_x and σ_y negative (tension stress)	1

Table II 17-8
Buckling and Reduction Factors for Plane Elementary Plate Panels

Load case	Edge stress ratio Ψ	Aspect ratio $\alpha = \frac{a}{b}$	Buckling factor K	Reduction factor κ
1 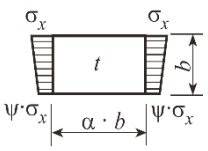	$1 \geq \Psi \geq 0$	$\alpha \geq 1$	$K = \frac{8.4}{\Psi + 1.1}$	$\kappa_x = 1$ for $\lambda \leq \lambda_c$ $\kappa_x = c\left(\frac{1}{\lambda} - \frac{0.22}{\lambda^2}\right)$ for $\lambda > \lambda_c$ $c = (1.25 - 0.12\Psi) \leq 1.25$ $\lambda_c = \frac{c}{2}\left(1 + \sqrt{1 - \frac{0.88}{c}}\right)$
	$0 > \Psi > -1$		$K = 7.63 - \Psi(6.26 - 10\Psi)$	
	$\Psi \leq -1$		$K = 5.975(1 - \Psi)^2$	
2 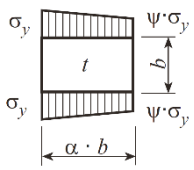	$1 \geq \Psi \geq 0$	$\alpha \geq 1$	$K = F_1\left(1 + \frac{1}{\alpha^2}\right)^2 \frac{2.1}{\Psi + 1.1}$	$\kappa_y = c\left[\frac{1}{\lambda} - \frac{R + F^2(H - R)}{\lambda^2}\right]$ $c = (1.25 - 0.12\Psi) \leq 1.25$ $R = \lambda\left(1 - \frac{\lambda}{c}\right)$ for $\lambda < \lambda_c$ $R = 0.22$ for $\lambda \geq \lambda_c$ $\lambda_c = \frac{c}{2}\left(1 + \sqrt{1 - \frac{0.88}{c}}\right)$ $F = \left(1 - \frac{\frac{K}{0.91} - 1}{\lambda_p^2}\right) c_1 \geq 0$ $\lambda_p^2 = \lambda^2 - 0.5$ for $1 \leq \lambda_p^2 \leq 3$ $c_1 = \left(1 - \frac{F_1}{\alpha}\right) \geq 0$ $H = \lambda - \frac{2\lambda}{c\left(T + \sqrt{T^2 - 4}\right)} \geq R$ $T = \lambda + \frac{14}{15\lambda} + \frac{1}{3}$
	$0 > \Psi > -1$	$1 \leq \alpha \leq 1.5$	$K = F_1\left[\left(1 + \frac{1}{\alpha^2}\right)^2 \times \frac{2.1(1 + \Psi)}{1.1} - \frac{\Psi}{\alpha^2}(13.9 - 10\Psi)\right]$	
		$\alpha > 1.5$	$K = F_1\left[\left(1 + \frac{1}{\alpha^2}\right)^2 \times \frac{2.1(1 + \Psi)}{1.1} - \frac{\Psi}{\alpha^2}\left(\frac{5.87 + 1.87\alpha^2}{+\frac{8.6}{\alpha^2} - 10\Psi}\right)\right]$	
	$\Psi \leq -1$	$1 \leq \alpha \leq \frac{3(1 - \Psi)}{4}$	$K = 5.975F_1\left(\frac{1 - \Psi}{\alpha}\right)^2$	
		$\alpha > \frac{3(1 - \Psi)}{4}$	$K = F_1\left[\frac{3.9675\left(\frac{1 - \Psi}{\alpha}\right)^2}{+0.5375\left(\frac{1 - \Psi}{\alpha}\right)^4 + 1.87}\right]$	

Table II 17-8
Buckling and Reduction Factors for Plane Elementary Plate Panels (cont.)

Load case	Edge stress ratio Ψ	Aspect ratio $\alpha = \frac{a}{b}$	Buckling factor K	Reduction factor κ
3 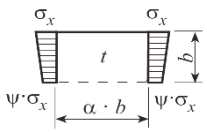	$1 \geq \Psi \geq 0$	$\alpha > 0$	$K = \frac{4\left(0.425 + \frac{1}{\alpha^2}\right)}{3\Psi + 1}$	$\kappa_x = 1$ for $\lambda \leq 0.7$ $\kappa_x = \frac{1}{\lambda^2 + 0.51}$ for $\lambda > 0.7$
	$0 > \Psi > -1$		$K = 4\left(0.425 + \frac{1}{\alpha^2}\right)(1 + \Psi) - 5\Psi(1 - 3.42\Psi)$	
4 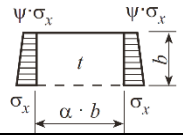	$1 > \Psi > -1$	$\alpha > 0$	$K = \left(0.425 + \frac{1}{\alpha^2}\right)\frac{3 - \Psi}{2}$	
5 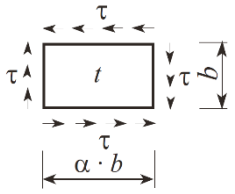	Nil		$K = K_\tau\sqrt{3}$	$\kappa_\tau = 1$ for $\lambda \leq 0.84$ $\kappa_\tau = \frac{0.84}{\lambda}$ for $\lambda > 0.84$
		$\alpha \geq 1$	$K_\tau = \left(5.34 + \frac{4}{\alpha^2}\right)$	
		$0 < \alpha < 1$	$K_\tau = \left(4 + \frac{5.34}{\alpha^2}\right)$	
Boundary condition	- - - - - plate edge free ——— plate edge simple support			

Table II 17-9
Moments of Inertia

Section	I_P, in cm^4	I_T, in cm^4	I_ω, in cm^6
Flat bar	$\frac{h_w^3 t_w}{3 \cdot 10^4}$	$\frac{h_w t_w^3}{3 \cdot 10^4}\left(1 - 0.63\frac{t_w}{h_w}\right)$	$\frac{h_w^3 t_w^3}{36 \cdot 10^6}$
Bulb, angle or tee sections	$\left(\frac{A_w h_w^2}{3} + A_f e_f^2\right)10^{-4}$	$\frac{h_w t_w^3}{3 \cdot 10^4}\left(1 - 0.63\frac{t_w}{h_w}\right) + \frac{b_f t_f^3}{3 \cdot 10^4}\left(1 - 0.63\frac{t_f}{b_f}\right)$	For bulb and angle sections: $\frac{A_f e_f^2 b_f^2}{12 \cdot 10^6}\left(\frac{A_f + 2.6A_w}{A_f + A_w}\right)$ For tee-sections: $\frac{b_f^3 t_f e_f^2}{12 \cdot 10^6}$

Table II 17-10
Permissible nominal surface pressure p_n, in N/mm^2

Material	p_n, when loaded by	
	Vertical force	Horizontal force
Hull structure steel	25	40
Hardened steel	35	50
Plastic materials in steel	50	-

Chapter 18
Machinery Casings

18.1 General

18.1.1 Machinery space openings in position 1 or 2 are to be properly framed and efficiently enclosed by steel casings of ample strength, and where the casings are not protected by other structures their strength are to be specially considered. Other openings in such casings are to be fitted with equivalent covers, permanently attached in their proper positions.

18.1.2 In general, ventilators necessary to continuously supply the machinery space are to have coamings of sufficient height to comply with 21.1.6(a) of this part, without having to fit weathertight closing appliances. Ventilators necessary to continuously supply the emergency generator room, if this is considered buoyant in the stability calculation or protecting opening leading below, are to have coamings of sufficient height to comply with 21.1.6(a) of this part, without having to fit weathertight closing appliances.

18.1.3 Where due to ship size and arrangement this is not practicable, lesser heights for machinery space and emergency generator room ventilator coamings, fitted with weathertight closing appliances in accordance with 21.1.6(b) of this part, may be permitted by the Society in combination with other suitable arrangements to ensure an uninterrupted, adequate supply of ventilation to these spaces.

18.2 Construction of Casings

18.2.1 The scantlings of plating and stiffeners of exposed casings protecting machinery openings are to be obtained as for superstructure end bulkheads and deckhouse walls specified in 12.3 of this Part.

18.2.2 For casings within open superstructures, the scantlings of plating and stiffeners are to be obtained from 12.4 of this Part as for an aft end bulkhead.

18.3 Skylights and Gratings

18.3.1 Skylights

(a) Skylights are to be substantially constructed and securely connected to coamings.

(b) Effective means is to be provided for closing and securing the hinged covers.

18.3.2 Gratings over stokehold openings are to be protected by hinged steel covers or the other effective means of closing.

Chapter 19

Machinery Spaces and Tunnels

19.1 General

19.1.1 The following features in the construction and the arrangement of the machinery space are to be carefully considered:

(a) Substantial construction and suitable arrangement of necessary openings in the machinery space.

(b) Adequate support for the deck.

(c) Suitable maintenance of the stiffness of the side and the bottom.

(d) Adequate distribution of the weight of the machinery.

19.1.2 The machinery space is to be sufficiently strengthened by means of web frames, web beams, and pillars or other equivalent arrangements.

19.1.3 All parts of the machinery, shafting, etc. are to be efficiently supported and the adjacent structure is to be adequately strengthened.

19.1.4 In ships of high power and in multiple screw ships, the structural construction and the efficiency of attachments of the machinery foundation and the adjacent structure are to be specially strengthened and plans are to be submitted for approval before the bottom construction is commenced.

19.2 Engine Seatings

19.2.1 In ships having a single bottom, the following applies:

(a) The main engines are to be seated upon thick rider plates laid across the top of deep floors or heavy foundation girders efficiently bracketed and stiffened and having sufficient strength in proportion to the power and size of the engines.

(b) The main lines of bolting that hold down the main engines to the rider plates mentioned in (a) are to pass through the rider plates into the girder plates provided underneath.

(c) In ships with longitudinal girders of not excessive spacing beneath the engine which is on the centre line of the hull, the centre keelson may be omitted for the section where the engine is located.

19.2.2 In ships having a double bottom in the machinery space, the following applies:

(a) Where engines are bolted directly to the inner bottom the thickness of plating under the engine is to be twice the rule thickness.

(b) Where built-up engine seatings of ample strength and stiffness are fitted above the inner bottom, transverse brackets are to be arranged over floors and, as far as practicable, longitudinal girders are to be under that in the seating.

19.2.3 Additional full depth longitudinal girders are to be fitted under the engine and the thrust block seating.

19.2.4 Installation of engine seating

(a) The various parts of the engine seating are to be accurately faired and properly closed before welding or riveting is commenced.

(b) Vertical web plates of the engine seating are to be made a hard bearing fit, top and bottom.

19.3 Boiler Bearers

19.3.1 Boilers are to be supported by deep saddle type floors or by transverse and longitudinal girders so arranged as to effectively distribute the weight.

19.3.2 Clearances

(a) Boilers are to be kept well clear of bunker and hold bulkheads, and sufficient spaces are to be allowed for proper access all around the boiler.

(b) Boilers are to be at least 460 mm clear of the tank top, the bunker wall, etc.

(c) Where the clear space is unavoidably less than that required by 19.3.2(b) above, the thickness of the adjacent structure is to be increased, or suitable insulating arrangements are to be made.

(d) Available clearances are to be indicated on the plan submitted for approval.

(e) Hold bulkheads and decks are to be kept well clear of the boilers and uptakes, or provided with suitable insulating arrangements.

(f) Side sparrings are to be provided on the bulkheads adjacent to the boilers, keeping suitable clearance on their hold sides.

19.3.3 Floors under boiler bearer

(a) In ships having a single bottom in the boiler space, the floor under the boiler bearer is to be increased in strength in compliance with 4.1 of this Part.

(b) In ships having a double bottom in the boiler space, the floor is to be increased in strength in compliance with 5.4 and 5.5 of this Part.

19.3.4 Decks under donkey boiler and coalfired boiler

(a) Decks under donkey boilers are to be increased 2 mm in thickness and protected under coal-fired boilers by not less than 50 mm of firebrick or cement.

(b) The requirements of 19.3.4(a) above are to be applied to any part of the deck on which the fire from the donkey boiler may be drawn.

19.4 Block and Auxiliary Foundations

19.4.1 Structure under thrust block

(a) Thrust blocks are to be bolted to efficient foundations extending well beyond thrust blocks and so arranged that the load is effectively distributed into adjacent structures.

(b) Additional intercostal girders with double attachments are to be fitted in way of block foundations as may be required.

19.4.2 Plumber blocks and auxiliary foundations are to be of substantial strength and efficiently stiffened both longitudinally and transversely.

19.5 Tunnels and Tunnel Recesses

19.5.1 Shaft Tunnels

(a) A watertight tunnel of sufficient size for examining and repairing the shafting is to be fitted in ships having machinery amidships, except in case of 19.5.1 (b) below.

(b) For ships intended to trade in sheltered waters, the watertight tunnel may be omitted provided that the shafting is otherwise protected and there is a recess at all times to the bearing and the packing gland, etc.

19.5.2 Doors and its closing appliances

(a) The watertight door is to be fitted at the fore end of the tunnel.

(b) For means of closing, and the construction of watertight doors, see 14.3 of this Part.

19.5.3 Escape trunks

(a) The escape trunk is to be provided in the tunnel at a suitable location as far as possible.

(b) The escape trunk is to be led to the bulkhead deck or above.

19.5.4 Thickness of flat side plating of tunnel

(a) The thickness of plating on flat sides of the tunnel is not to be less than that obtained from the following formula:

$2.9S\sqrt{h} + 2.5$ mm

where:

S = Spacing of stiffeners, in m.

h = Vertical distance at the mid-length of each hold from the lower edge of the side wall plating to the bulkhead deck at the centre line of the ship, in m.

(b) The lowest strakes of the plating are to be increased by 1 mm above the value required by 19.5.4(a) above.

19.5.5 Top of tunnel

(a) Where the top of the tunnel is flat,

(i) The thickness of flat plating of the top of tunnels or tunnel recesses is not to be less than that obtained from the formula in 19.5.4(a) above, h being taken as the height from the top plates to the bulkhead deck at the centre line of the ship;

(ii) Where unsheathed in way of the hatchway the top plating is to be increased by 2.5 mm;

(iii) Where the top of the tunnel or the recess forms a part of a deck, the thickness of the plating is to be increased by at least one mm above that obtained from the requirements in (i) above, but it is not to be less than that required for the deck plating at the same position;

(b) Where the top or side of the tunnel is curved,

(i) The top plating may be of the thickness required in 19.5.4(a) above with a stiffener spacing 150 mm less than that actually adopted;

(ii) The crown plating in way of the hatchway is to be increased by 2 mm unless covered with wood sheathing not less than 50 mm thick.

(iii) The wood sheathing mentioned in (ii) above is to be so secured as to keep watertightness of the tunnel where it might be damaged by cargo. Similar consideration is to be taken where apparatus such as ladder steps are provided in the tunnels.

19.5.6 Where the tunnel forms the boundary of the deep tank, the thickness of the side plating is not to be less than that required for the deep tank boundary bulkhead.

19.5.7 Where the tunnel of circular form passes through the deep tank, the thickness of the plating in way of the tank is to be not less than that given by the following formula:

$9.1 + 0.134\, d_1\, h$ mm

where:

d_1 = The diameter of tunnel, in m.

h = Greater of the vertical distances given below:

Vertical distance (m) measured from the bottom of tunnel to the mid-point between the top of tanks and the top of overflow pipes; or

0.7 times the vertical distance (m) measured from the bottom of tunnel to the point 2.0 metres above the top of overflow pipes.

19.5.8 Stiffeners on tunnel

(a) The spacing of stiffeners on the tunnel is not to exceed 915 mm.

(b) The section modulus of stiffeners is not to be less than that obtained from the following formula:

$4.0Shl^2$ cm^3

where:

l = Distance from the heel of the lower edge of the side wall to the top of the plate at side, in m.

S = Spacing of stiffeners, in m.

h = Vertical distance at mid-length of each hold from the mid-point of l to the bulkhead deck, in m.

(c) Where the ratio of the radius of the rounded tunnel top to the height of the tunnel is comparatively large, the section modulus of stiffeners is to be adequately increased over that specified in (b).

(d) The lower ends of stiffeners over 150 mm in depth are to be connected to parts such as the inner bottom plating by lug connections.

19.5.9 Additional strengthening is to be fitted under the heel of the pillar, the hatch end support or the mast stepped on the tunnel.

19.5.10 Where the top of tunnels or tunnel recesses forms part of the deck; beams, pillars and girders under the top are to be of the scantlings required for similar members of bulkhead recesses.

19.5.11 The ventilator and the escape trunk fitted in the tunnel or the tunnel recess are to be made watertight up to the bulkhead deck and to have the scantling suitable for the pressure to which they may be subjected.

19.5.12 Where watertight tunnels similar to shaft tunnels are provided, they are to be of similar construction to that of the shaft tunnels.

Chapter 20
Ceiling

20.1 Ceiling

20.1.1 Close ceiling in single bottom

(a) The close ceiling is to be laid on floors and up to the upper turn of bilges.

(b) The close ceiling is to be arranged for easy removal for inspection of the bottom.

20.1.2 Ceiling in double bottom

(a) The ceiling is to be laid over the bilge and under the hatchway.
   (i) The ceiling over bilges is to be arranged with portable sections, which are readily removable.
   (ii) The ceiling under the hatchways may be omitted provided that the thickness of the inner bottom plating in way is increased by 2 mm.

(b) The ceiling where fitted on top of inner bottom plating, is to be laid either directly on the inner bottom plating embedded in a substantial body of mixed tar and cement or other suitable covering, or on the batten not less than 13 mm in thickness, providing a clear space of at least 12.5 mm for drainage.

20.1.3 The thickness of ceilings is not to be less than 63 mm.

Where covers or fittings of manholes of the inner bottom in cargo holds project above the plating, they are to be protected by a steel coaming around each manhole and fitted with hatches of wood or steel.

Chapter 21

Ventilators, Air and Sounding Pipes

21.1 Ventilators

21.1.1 Height of ventilator coaming

(a) The minimum height of the ventilator coaming above the upper surface of the deck exposed to the weather, measured above the sheathing, if fitted, is to be as follows:

900 mm in Position 1
760 mm in Position 2

(b) The minimum height of the coaming of the patent ventilator will be specially considered.

(c) Where the ship has an unusually large freeboard or where the ventilator serves spaces within unenclosed superstructures, the height of ventilator coamings may be suitably reduced.

21.1.2 The thickness of ventilator coamings in Positions 1 and 2 specified in 17.1.2 of this Part leading to spaces below the freeboard deck or within enclosed superstructures is not to be less than that given by Line 1 in Table II 21-1 of this Chapter. Where the height of the coamings is reduced by the provisions in 21.1.1, the thickness may be suitably reduced. Where ventilators pass through superstructures other than enclosed superstructures, the thickness of ventilator coamings in the superstructures is not to be less than that given by Line 2 in Table II 21-1 of this Chapter.

Table II 21-1
Thickness of Ventilator Coamings

Thickness of coaming plate (mm)	Outside diameter of ventilator (mm)		
	80 and under	160	230 and over but less than 330
Line 1	6	8.5	8.5
Line 2	4.5	4.5	6

Notes:
(1) For intermediate values of outside diameter of ventilator, the thickness of coaming plate is to be obtained by linear interpolation.
(2) Where the outside diameter of ventilator is over 330 mm, the thickness of coaming plate is to be in accordance with the discretion of the Society.

21.1.3 The coaming is to be effectively secured to properly stiffened deck plating of the sufficient thickness.

21.1.4 The ventilator coaming which exceeds 900 mm in height and is not supported by the adjacent structure is to be specially supported.

21.1.5 In particularly exposed positions the ventilator coaming height, scantlings and/or support may be required to be suitably increased above that given above.

21.1.6 Closing appliances

(a) Strong plugs and canvas covers or efficient metal covers which can be readily and effectively secured in place are to be provided for closing openings in coamings unless the height of the coaming is greater than 4.5 m above the deck in Position 1 and 2.3 m above the deck in Position 2.

(b) In ships of not more than 100 m in length for freeboard the closing appliances are to be permanently attached. Where not so provided in other ships they are to be conveniently stowed near ventilators to which they are to be fitted.

(c) Ventilators to cargo and machinery spaces are to be provided with a means for closing the openings that is capable of being operated from outside the spaces in case of fire. Furthermore, these ventilators are to be provided with an indicator that enables confirmation whether the shutoff is open or closed from outside of the ventilator as well as suitable means of inspection for closing appliances.

(d) All ventilator openings in exposed positions on the freeboard and superstructure decks are to be provided with efficient weathertight closing appliances. Where the coaming of any ventilator extends to more than 4.5 m above the surface of the deck in Position I or more than 2.3 m above the surface of the deck in Position II specified in 17.1.2 of this Part, such closing appliances may be omitted unless required in (c) above.

21.1.7 Machinery spaces

(a) Ventilators necessary to continuously supply the machinery spaces are to have coamings of height more than 4.5 m above the deck in Position 1 and 2.3 m above the deck in Position 2, without having to fit weathertight closing appliances. Ventilators to emergency generator rooms are to be so positioned that closing appliances are not required.

(b) Where due to ship size and arrangement this is not practicable, lesser heights for machinery space ventilator coamings may be accepted with provision of weathertight closing appliances in combination with other suitable arrangements to ensure an uninterrupted, adequate supply of ventilation to these spaces.

21.1.8 Ventilator cowls are to be fitted closely to coamings and are to have housings of not less than 380 mm, except that a smaller housing may be permitted for ventilators of not greater than 200 mm in diameter.

21.1.9 The ventilators for the deckhouses which protect the companionways leading to spaces below the freeboard deck are to be equivalent to those for the enclosed superstructures.

21.1.10 The coamings of ventilators supplying the emergency generator room is to extend to more than 4.5 m above the surface of the deck in Position 1, and more than 2.3 m above the surface of the deck in Position 2 specified in 17.1.2 of this Part. The ventilator openings are not to be fitted with weathertight closing appliances, except for those complying with IACS UR M75. However, where due to ship size and arrangement this requirement is not practicable, the height of ventilator coamings is to be at the discretion of the Society.

21.1.11 The ventilators located on the exposed deck forward of 0.25L are to be of sufficient strength to resist green sea force if the height of the exposed deck in way of those ventilators is less than 0.1L or 22 m above the designed maximum load line, whichever is smaller. The length L is specified in 1.2.1 of this Part.

21.2 Air and Sounding Pipes

21.2.1 Air and soundings pipes are to be fitted in accordance with the requirements of Part VI and this Chapter.

21.2.2 Height of air pipes

(a) The height of the air pipe from the upper surface of the deck exposed to the weather, measured above sheathing, if fitted, is not to be less than:

760 mm on the freeboard deck (including raised quarter deck).
450 mm on the superstructure deck.

(b) Where these heights may interfere with the working of the ship, a lower height may be approved, provided that closing arrangements are provided and other circumference justifying a lower height are satisfactory.

21.2.3 All openings of air and sounding pipes are to be provided with permanently attached satisfactory means of closing to prevent the free entry of water. Air pipes are to be provided with automatic closing devices.

21.2.4 Striking plates of suitable thickness or equivalent are to be fitted under all sounding pipes.

21.2.5 Air and sounding pipes are to be well protected in all cargo spaces or other areas where damage might likely occur.

Chapter 22

Scuppers and Sanitary Discharges

22.1 Scuppers and Sanitary Discharges

22.1.1 Scuppers of sufficient number and size to provide effective drainage are to be fitted in all decks. However for the drainage of enclosed cargo spaces situated on the freeboard deck of a ship, the Society may permit the means of drainage to be dispensed with in any particular compartment of any ship or class of ship provided that the safety of the ship is considered not to be impaired by reasons coming from size or internal subdivision of those spaces.

22.1.2 Scuppers draining from the weather deck and spaces within the superstructure or the deckhouse not fitted with efficient weathertight doors are to be led overboard.

22.1.3 Scuppers and discharges draining from the space below the freeboard deck or the space within the superstructure or the deckhouse on the freeboard deck fitted with efficient weathertight doors may be led to the bilge, but may be led overboard provided that the space drained is above the load waterline, and pipes are fitted with efficient and accessible means of preventing water from passing inboard as required by 22.1.4 below.

22.1.4 Automatic non-return valves

(a) Non-return valves

Normally each separate discharge is to have one automatic non-return valve with positive means of closing it from a position above the freeboard deck. Where the inboard end of the discharge pipe is located at least 0.01L above the Summer Load Line, the discharge may have two automatic non-return valves without positive means of closing. Where that vertical distance exceeds 0.02L, a single automatic non-return valve without positive means of closing may be accepted. The means for operating the positive action valve are to be readily accessible and provided with an indicator showing whether the valve is open or closed.

(b) One automatic non-return valve and one sluice valve controlled from above the freeboard deck instead of one automatic non-return valve with a positive means of closing from a position above the freeboard deck, is acceptable.

(c) Where two automatic non-return valves are required, the inboard valve is always to be accessible for examination under service conditions (i.e., the inboard valve is to be above the level of the Tropical Load Line). If this is not practicable, the inboard valve need not be located above the Tropical Load Line, provided that a locally controlled sluice valve is fitted between the two automatic non-return valves.

(d) Where sanitary discharges and scuppers lead overboard through the shell in way of machinery spaces, a locally operated positive closing valve at the shell, together with a non-return valve inboard, is acceptable. The controls of the valves are to be in an easily accessible position.

(e) The position of the inboard end of discharges is to be related to the Summer Timber Load Line when a timber freeboard is assigned.

(f) The requirements for non-return valves are applicable only to those discharges which remain open during the normal operation of a ship. For discharges which are to be kept closed at sea, a single screw down valve operated from the deck is acceptable.

(g) Table II 22-1 provides the acceptable arrangements of scuppers, inlets and discharges.

22.1.5 Scupper pipes from enclosed cargo spaces on the freeboard deck of a ship are to be in accordance with the following requirements.

(a) Where the freeboard to the freeboard deck is such that the deck edge is immersed when the ship heels more than 5°, the drainage shall be by means of a sufficient number of scuppers of suitable size discharging directly overboard, fitted in accordance with the requirements for scuppers, inlets and discharges of the International Convention on Load Lines in force.

(b) Where the freeboard is such that the edge of the bulkhead deck or the edge of the freeboard deck, respectively, is immersed when the ship heels 5° or less, the drainage of the enclosed cargo spaces on the bulkhead deck or on the freeboard deck, respectively, shall be led to a suitable space, or spaces, of adequate capacity, having a high water level alarm and provided with suitable arrangements for discharge overboard. In addition, it is to be ensured that:

(i) the number, size and disposition of the scuppers are such as to prevent unreasonable accumulation of free water;

(ii) the pumping arrangements required for ships, as applicable, take account of the requirements for any fixed pressure water-spraying fire-extinguishing system;

(iii) water contaminated with petrol or other dangerous substances is not drained to machinery spaces or other spaces where sources of ignition may be present; and

(iv) where the enclosed cargo space is protected by a carbon dioxide fire-extinguishing system, the deck scuppers are to be fitted with means to prevent the escape of the smothering gas.

22.1.6 Scuppers let through the shell from enclosed superstructures used for the carriage of cargo are to be permitted only where the edge of the freeboard deck is not immersed when the ship heels 5° either way. In other cases the drainage is to be led inboard in accordance with requirements of the International Convention for the Safety of Life at Sea in force.

22.1.7 In manned machinery spaces, main and auxiliary sea inlets and discharges in connection with the operation of machinery may be controlled locally. The controls are to be readily accessible and are to be provided with indicators showing whether the valves are open or closed.

22.1.8 Scuppers and discharge pipes originating at any level and penetrating the shell either more than 450 mm below the freeboard deck or less than 600 mm above the Summer Load Line are to be provided with a non-return valve at the shell. This valve, unless required by 22.1.4, may be omitted if the piping is of substantial thickness (see 22.1.9 below)

22.1.9 Scupper and discharge pipes

(a) For scupper and discharge pipes, where substantial thickness is not required:

(i) For pipes having an external diameter equal to or less than 155 mm, the thickness is not to be less than 4.5 mm;

(ii) For pipes having an external diameter equal to or more than 230 mm, the thickness is not to be less than 6 mm.

Intermediate sized are to be determined by linear interpolation.

(b) For scupper and discharge pipes, where substantial thickness is required:

(i) For pipes having an external diameter equal to or less than 80 mm, the thickness is not to be less than 7 mm;

(ii) For pipes having an external diameter of 180 mm, the thickness is not to be less than 10 mm;

(iii) For pipes having an external diameter equal to or more than 220 mm, the thickness is not to be less than 12.5 mm.

Intermediate sizes are to be determined by linear interpolation.

22.1.10 In all cargo spaces or other spaces where damage might likely occur, all scuppers and discharges including their valves, controls and indicators are to be well protected.

22.1.11 In cases where fixed pressure water-spraying systems are fitted in closed vehicle and ro/ro spaces and special category spaces, drainage systems are to comply with SOLAS Reg. II-2/20.6.1.4.

22.1.12 Discharges with inboard opening located lower than the ship's uppermost load line may be accepted when a loop of the pipe is arranged between the inboard opening and the outlet in hull. The top of the loop is to be regarded as the position of the inboard opening, and the pipeline shall be provided with valves according to Table II 22-1 of this Chapter.

22.1.13 Gravity discharges from top wing tanks may be arranged. The drop valves shall be of substantial construction and of ductile material, and they are to be closeable from an always accessible position. It is to be possible to blank-flange the discharge or to lock the valves in closed position when the tanks are used for carrying cargo. The thickness of the pipe or box leading from the tank through the shell is to comply with the requirements given for discharges.

22.1.14 Drainage from helicopter decks is to comply with the requirements for the class notation **Helideck-N**.

22.2 Rubbish and Ash Chutes

22.2.1 The inboard opening of each ash-shoot, rubbish-shoot, etc. is to be provided with an efficient cover.

22.2.2 If the inboard opening prescribed in 22.2.1 is situated below the freeboard deck of ships, the cover is to be watertight, and in addition an automatic non-return valve is to be fitted in the ash-shoot, rubbish-shoot, etc. at an easily accessible position above the deepest subdivision load line.

22.2.3 Two gate valves controlled from the working deck of the chute instead of the non-return valve with a positive means of closing from a positive above the freeboard deck which comply with the following requirements are acceptable:

(a) the lower gate valve is to be controlled from a position above the freeboard deck. An interlock system between the two valves is to be arranged;

(b) the inboard end is to be located above the waterline formed by an 8.5° heel to port or starboard at a draft corresponding to the assigned summer freeboard, but not less than 1,000 mm above the summer waterline. Where the inboard end exceeds 0.01L above the summer waterline, valve control from the freeboard deck is not required, provided the inboard gate valve is always accessible under service conditions; and

(c) Alternatively, the upper and lower gate valves may be replaced by a hinged weathertight cover at the inboard end of the chute together with a discharge flap. The cover and flap are to be arranged with an interlock so that the discharge flap cannot be operated until the hopper cover is closed.

22.2.4 The entire chute, including the cover, is to be constructed of material of substantial thickness. This implies that the entire chute is to be of at least equivalent strength as the hull it is penetrating.

22.2.5 The controls for the gate valves and/or hinged covers are to be clearly marked: "Keep closed when not in use".

22.2.6 Where the inboard end of the chute is below the equilibrium waterlines of a ship to which damage stability requirements apply, then:

(a) the inboard end hinged cover/valve is to be watertight;

(b) the valve is to be a screw-down non-return valve fitted in an easily accessible position above the deepest load line; and

(c) the screw-down non-return valve is to be controlled from a position above the bulkhead deck and provided with open/closed indicators. The valve control is to be clearly marked: “Keep closed when not in use”.

22.3 Materials for Valves and Pipes

22.3.1 All valves and shell fittings required by this Chapter are to be of steel, bronze or other approved ductile materials. Valves of ordinary cast iron or similar material are not acceptable.

22.3.2 All pipes to which this Chapter refers are to be of steel or other equivalent approved materials.

Table II 22-1
Acceptable Arrangements of Scupper, Inlets and Discharges

<table>
<tr><td colspan="6">Discharges coming from enclosed spaces below the freeboard deck
or on the freeboard deck</td></tr>
<tr><td colspan="2">General requirement (22.1.4) where inboard end ≦0.01L above SWL</td><td colspan="2">Discharges through machinery space</td><td colspan="2">Alternatives (22.1.4) where inboard end
＞0.01L above SWL</td></tr>
<tr><td colspan="2"> 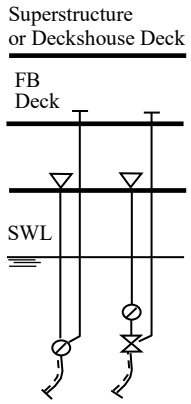
</td><td colspan="2"> 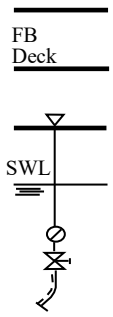
</td><td colspan="2"> 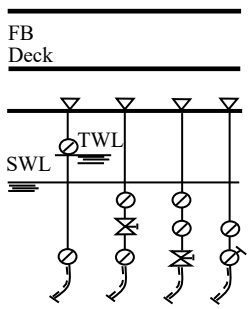
</td></tr>
<tr><td colspan="3">Discharges coming from enclosed spaces below the freeboard deck or on the freeboard deck</td><td colspan="3">Discharges coming from other spaces</td></tr>
<tr><td colspan="3">Alternatives (22.1.4) where inboard end
＞0.02L above SWL</td><td colspan="2">Outboard end＞450mm below FB deck or ≦ 600 mm above SWL(22.1.7)</td><td>Otherwise (22.1.5)</td></tr>
<tr><td colspan="3"> 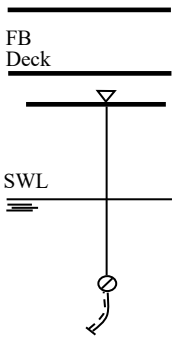
</td><td colspan="2"> 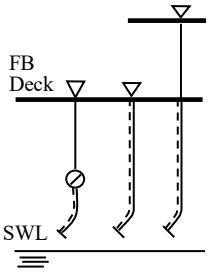
</td><td> 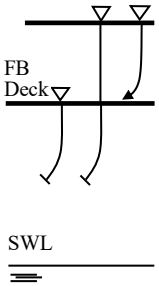
</td></tr>
<tr><td colspan="2">Symbols:</td><td>⊘</td><td>Non return valve without positive means of closing</td><td>┬</td><td>Remote control</td></tr>
<tr><td>▽</td><td>inboard end of pipes</td><td rowspan="2">⊘̸</td><td rowspan="2">Non return valve with positive means of closing controlled locally</td><td rowspan="2">|</td><td rowspan="2">Normal thickness</td></tr>
<tr><td>⌐</td><td>outboard end of pipes</td></tr>
<tr><td>↙</td><td>terminating on the open deck</td><td>⧖</td><td>Valve controlled locally</td><td>⦚</td><td>Substantial thickness</td></tr>
</table>

Chapter 23

Painting

23.1 Painting

23.1.1 Unless otherwise approved, all steel work is to be suitably coated with paint or equivalent except in side tanks intended for oil. Special requirements may be additionally made by the Society in accordance with the kind of ships, purpose of spaces, etc. However, where it is recognized by the Society that the spaces are effectively protected against corrosion of steel works by the means other than painting or due to quality of cargoes, etc., painting may be omitted. The surface of steel works is to be thoroughly cleaned and loose rust, oil and other injurious adhesives are to be removed before being painted. At least the outer surface of shell plating below the load line is to be sufficiently free from rust and mill scale before painting.

23.1.2 Steel work is to be suitably cleaned and cleared of mill scale. It is recommended that blast cleaning or other equally effective means be employed for this purpose.

23.1.3 When the mill scale is removed by methods less effective than shot blasting, it is desirable when several months elapse between launching and delivery, to dry-dock the ship immediately before entry into service.

23.1.4 All dedicated sea water ballast tanks in all types of ships of not less than 500 GT are to have protective coatings in compliance with the requirements of IMO Resolution MSC.215(82).

23.1.5 Tanks or holds for salt water ballast are to have a corrosion resistant hard type coating such as epoxy or zinc on all structural surfaces. Where a long retention of salt water ballast is expected due to the type of ship or unit, special consideration for the use of inhibitors or sacrificial anodes may be given.

23.2 Cementing

23.2.1 The bottom in ships with single bottoms, the bilges in all ships and the double bottoms in the boiler spaces of all ships are to be efficiently protected by Portland cement or other equivalent materials which cover the plates and frames as far as the upper turn of bilge. However, cement protection may be dispensed with in the bottom of the space solely used for carriage of oil.

23.2.2 Portland cement is to be mixed with fresh water and sand or other satisfactory substances, in the proportion of about one part of cement to two of sand.

23.2.3 The thickness of cement is not to be less than 20 mm at the edges.

23.2.4 The top plating of tanks, where ceiled directly, is to be covered with good tar put on hot and well sprinkled with cement powder, or with other equally effective coatings.

Chapter 24

Rudders

24.1 General

24.1.1 The following requirements generally apply to:

(a) The rudder constructed as a double-plated stream line section, an ordinary shape and not more than two pintles, as shown in Fig. II 24-1 and Fig. II 24-2 of this Chapter, designed with a moving angle not more than 35° on each side without any special arrangement for increasing the rudder force, such as fins, flaps, steering propellers, etc. Rudders not confirming with the ordinary types are to be approved under special consideration by the Society.

(b) High-lift rudders described in Table II 24-1 of this Chapter, the rudder operating angle of which might be exceeding 35° on each side at maximum design speed.

(c) Other steering equipment other than rudders identified in this Chapter.

24.1.2 Materials

(a) Rudder stocks, pintles, flanges, coupling bolts, keys and cast parts of rudders are to be made of rolled, forged steel or cast carbon manganese steel conforming to the requirements of Part XI.

(b) Welded part of rudders are to be made of approval rolled hull materials.

(c) Material factor K for normal and high tensile steel plating may be taken into account when specified in each individual rule requirement. The material factor K is to be taken as defined in 1.5.2(a) of this Part, unless otherwise specified.

(d) For rudder stocks, pintles, keys and bolts the minimum yield stress is not to be less than 200 N/mm^2. The requirements in this Chapter are based on a material's yield stress of 235 N/mm^2. If material is used having a yield stress differing from 235 N/mm^2, the material factor K is to be determined as specified in 1.5.2 (c) of this Part.

(e) Before significant reductions in rudder stock diameter due to the application of higher tensile steels are granted, the evaluation of the large rudder stock deformations is to be submitted for consideration in order to avoid excessive edge pressure in way of bearings.

24.1.3 Effective means are to be provided for preventing the rudder from jumping and for supporting the weight of the rudder without excessive bearing pressure. They are to be arranged to prevent accidental unshipping or undue movement of the rudder which may cause damage to the steering gear.

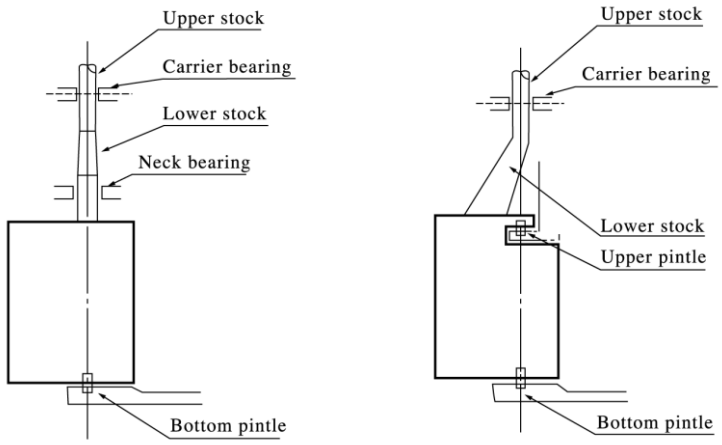

Fig. II 24-1
Shoe piece Supported Type Rudder

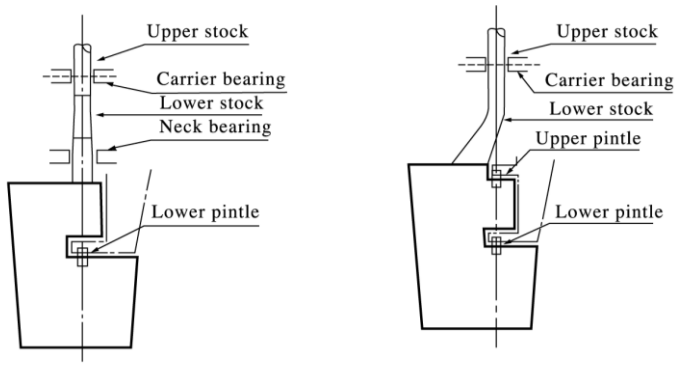

Fig. II 24-2
Horn Supported Type Rudder

24.1.4 Welding and design details

(a) Slot-welding is to be limited as far as possible. Slot welding is not to be used in areas with large in-plane stresses transversely to the slots or in way of cut-out areas of semi-spade rudders.

When slot welding is applied, the length of slots is to be minimum 75 mm with breadth of 2 t, where t is the rudder plate thickness, in mm. The distance between ends of slots is not to be more than 125 mm. The slots are to be fillet welded around the edges and filled with a suitable compound, e.g. epoxy putty. Slots are not to be filled with weld.

Continuous slot welds are to be used in lieu of slot welds. When continuous slot welding is applied, the root gap is to be between 6-10 mm. The bevel angle is to be at least 15°.

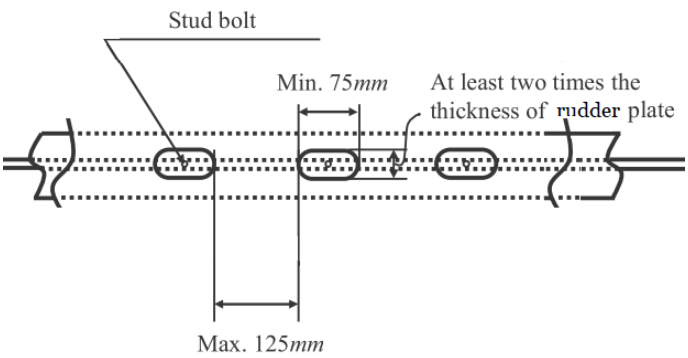

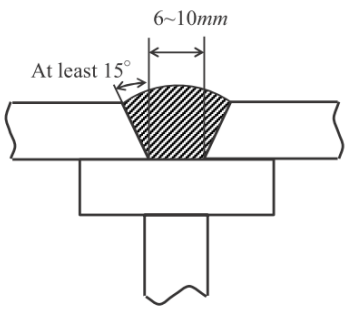

(b) In way of the rudder horn recess of semi-spade rudders, the radii in the rudder plating are not to be less than 5 times the plate thickness, but in no case less than 100 mm. Welding in side plate are is to be avoided in or at the end of the radii. Edges of side plate and weld adjacent to radii are to be ground smooth.

(c) Welds between plates and heavy pieces (solid parts in forged or cast steel or very thick plating) are to be made as full penetration welds. In way of highly stressed areas e.g. cut-out of semi-spade rudder and upper part of spade rudder, cast or welding on ribs is to be arranged. Two sided full penetration welding is normally to be arranged. Where back welding is impossible welding is to be performed against ceramic backing bars or equivalent. Steel backing bars may be used and are to be continuously welded on one side to the heavy piece.

(d) Requirements for welding and design details of rudder trunks are described in 24.10 of this Chapter.

(e) Requirements for welding and design details when the rudder stock is connected to the rudder by horizontal flange coupling are described in 24.5.1 of this Chapter.

(f) Requirements for welding and design details of rudder horns are described in 2.2.5 of this Part.

24.1.5 Equivalence

(a) The Society may accept alternatives to requirements given in this Chapter, provided they are deemed to be equivalent.

(b) Direct analyses adopted to justify an alternative design are to take into consideration all relevant modes of failure, on a case by case basis. These failure modes may include, amongst others: yielding, fatigue, buckling and fracture. Possible damages caused by cavitation are also to be considered.

(c) If deemed necessary by the Society, lab tests, or full scale tests may be requested to validate the alternative design approach.

24.2 Rudder Force and Rudder Torque

24.2.1 Rudder blades without cut-outs

(a) The rudder force upon which the rudder scantlings are to be based is to be determined from the following formula:

$$F = 132\, K_1\, K_2\, K_3\, A\, V^2 \qquad \text{N}$$

where:

F	=	Rudder force, in N.
A	=	Area of rudder blade, in m^2.
V	=	Maximum service speed of ship, in knots, with the ship on summer load waterline, when the service speed ≥ 10 knots.
	=	$\frac{1}{3}(V + 20)$ when the service speed < 10 knots.
	=	Maximum astern speed for astern condition, however in no case less than 50% of maximum service speed, in knots.
K_1	=	Factor depending on the aspect ratio λ of the rudder area.
	=	$\frac{1}{3}(\lambda + 2)$
λ	=	$\frac{h^2}{A_t} \leq 2$
h	=	Mean height of rudder area, in m, as shown in Fig. II 24-3 of this Chapter.
A_t	=	Sum of rudder blade area A and area of rudder post or rudder horn, if any, within the mean height h, in m^2.
K_2	=	Factor depending on the rudder profile as specified in Table II 24-1 of this Chapter.

K_3 = 0.8 for rudders outside the propeller jet.
= 1.15 for rudders behind a fixed propeller nozzle.
= 1.0 otherwise.

(b) The rudder torque is to be calculated for both the ahead and astern condition from the following formula:

$Q = F\,r$ N-m

where:

Q	=	Rudder torque, in N-m.
r	=	$b\,(\alpha - k)$,in m,
	≥	0.1 b for ahead condition, in m.
b	=	Mean breadth of rudder area, in m, see Fig. II 24-3 of this Chapter.
α	=	0.33 for ahead condition.
	=	0.66 for astern condition.
k	=	Balance factor.
	=	$\frac{A_f}{A}$
A_f	=	Portion of the rudder blade area situated ahead of the center line of the rudder stock, in m^2.
A	=	As specified in (a) above.

24.2.2 Rudder blades with cut-outs (semispade rudders)

(a) The rudder force of each part may be taken as:

$F_1 = F\frac{A_1}{A}$ N

$F_2 = F\frac{A_2}{A}$ N

where:

A	=	As specified in 24.2.1 (a) above.
	=	$A_1 + A_2$ see Fig. II 24-4 of this Chapter.

(b) The total resulting torque may be taken as:

$Q = Q_1 + Q_2$ N-m

where:

Q	=	Total torque, in N-m.
	≥	$0.1F\left(\frac{A_1 b_1 + A_2 b_2}{A}\right)$ for ahead condition
Q_1	=	$F_1\,r_1$ N-m
Q_2	=	$F_2\,r_2$ N-m
r_1	=	$b_1(\alpha - k_1)$ lever of A_1, in m.
r_2	=	$b_2(\alpha - k_2)$ lever of A_2, in m.
b_1 and b_2	=	Mean breadth of partial areas A_1 and A_2.
α	=	0.33 for ahead condition.
	=	0.66 for astern condition.
	=	0.25 or ahead condition with concerned rudder part behind a fixed structure such as rudder horn
	=	0.55 for astern condition with concerned rudder part behind a fixed structure such as rudder horn.
k_1	=	$\frac{A_{1f}}{A_1}$
k_2	=	$\frac{A_{2f}}{A_2}$

Table II 24-1
Factor of K_2

Profile type	K_2	
	Ahead condition	Astern condition
NACA-00 series Göttingen 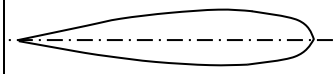	1.10	0.80
Flat side 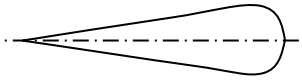	1.10	0.90
Hollow 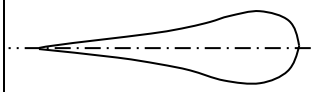	1.35	0.90
High lift rudders	1.70	to be specially considered; if not known: 1.30
Fish tail	1.40	0.80
Single plate	1.00	1.00
Mixed profiles (e.g. HSVA)	1.21	0.90

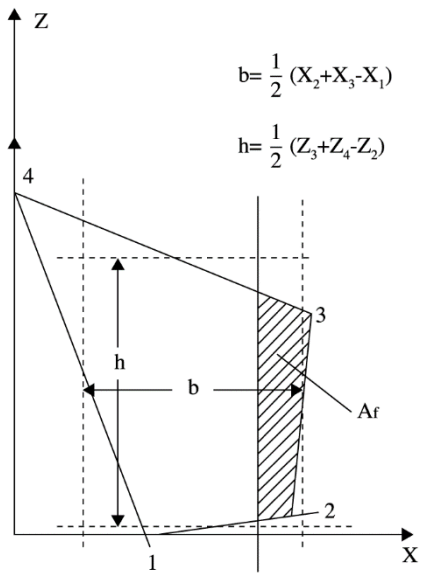

Fig. II 24-3
Rudder Blade without Cutout

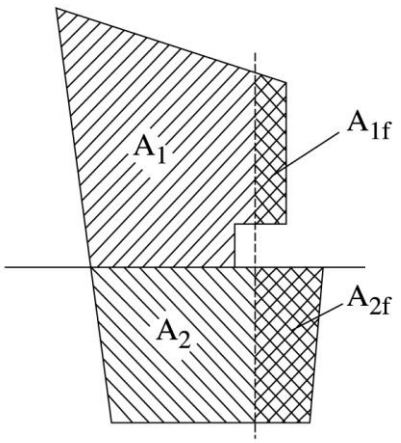

A_1 and A_2 include A_{1f} and A_{2f} respectively

Fig. II 24-4
Rudder Blade with Cutout

24.2.3 Rudder strength calculation

(a) The rudder strength is to be sufficient against the rudder force and rudder torque as given in 24.2.1 and 24.2.2 above. When the scantling of each part of a rudder is determined, the following moments and forces are to be considered:

For rudder body: bending moment and shear force

For rudder stock: bending moment and torque

For pintle bearing and rudder stock bearing: supporting force

For rudder horn and heel piece: bending moment shear force and torques.

(b) The bending moments, shear forces and supporting forces to be considered are to be determined by a direct calculation or by an approximate simplified method as deemed appropriate by the Society. For rudder supported by shoe pieces or rudder horns, these structures are to be included in the calculation model in order to account for the elastic support of the rudder body.

24.2.4 Rudder blades with twisted leading-edge

(a) This kind of rudder has the leading edge twisted horizontally on the top and bottom of the section that is an extension of the center of the propeller shaft. For the purpose of calculating design force, twisted rudders may be distinguished in four categories:

Category	Description
1	The projected leading edge of twisted upper and lower blades not lineup to each other
2	The projected leading edge of twisted upper and lower blades form a straight line
3	Rudder with twisted leading edge combined with tail edge flap or fins
4	The twisted leading edge has a smooth continuous wavy contour (no deflector) or the rudder has multiple section profile types

Design force for rudder with twisted leading edge is obtained according to the following criteria:

(i) For Category 1 rudders as indicated in the above table, design force over upper and lower rudder blades are obtained from the following equations respectively:

$F_1 = 132\ K_1\ K_2\ K_3\ A_1V^2$ N
$F_2 = 132\ K_1\ K_2\ K_3\ A_2V^2$ N
$F = F_1+F_2$ N

(ii) For Categories 2, 3, and 4, rudder design force indicated in 24.2.1(a) is applicable, that is:

$F = 132\ K_1\ K_2\ K_3\ AV^2$ N

where:

K_1, K_2, K_3, A, and V are as defined in 24.2.1(a), (for rudder has multiple section profile types, A is the whole projected areas).

A_1 and A_2 are the projected areas of upper and lower blades separated at the deflector cross section, respectively. Where the effective projected area of rudder bulb (if present) forward of rudder leading edge is significant and needs to be counted, the proportioned bulb effective areas are added to A_1 and A_2 accordingly.

Values of K_2 for ahead and astern conditions are determined from one of the methods below as applicable, if the type of basic rudder profile is not provided:

(i) K_2 is taken from Table II 24-1 of this Chapter for twisted rudders of Categories 1 & 2;

(ii) K_2 is taken from Table II 24-1 of this Chapter for twisted rudders of Category 3;

(iii) K_2 is subjected to special considerations for twisted rudders of Category 4;

(iv) Shipyard/rudder manufacturers' submitted K_2 obtained from testing data or calculations may be accepted subject to the Society's review of all the supporting documents;

(b) The rudder design torque, Q, for rudder scantling calculations, is to be in accordance with 24.2.1(a)or 24.2.2(b) of this Chapter as applicable.

24.3 Rudder Stock

24.3.1 The rudder stock diameter required for the transmission of the rudder torque is to be dimensioned such that the torsional stress will is not exceeding the following value:

$\tau_T = 68/K$ N/mm^2

The rudder stock diameter for the transmission of the rudder torque is therefore not to be less than:

$$d_t = 4.2\sqrt[3]{QK} \quad \text{mm}$$

where:

d_t	=	Rudder stock diameter for the transmission of the rudder torque in mm.
K	=	Material factor as specified in 1.5.2 (c) of this part.
Q	=	As specified in 24.2.1(b) and/or 24.2.2 above.

24.3.2 Rudder stock scantlings due to combined loads

If the rudder stock is subjected to combined torque and bending, the equivalent stress in the rudder stock is not to exceed 118/K, in N/mm^2.

The equivalent stress is to be determined by the formula:

$$\sigma_c = \sqrt{\sigma_b^2 + 3\tau_t^2} \quad \text{N/mm}^2$$

Bending stress:

$$\sigma_b = 10.2 \times 10^3 M / d_c^3 \quad \text{N/mm}^2$$

Torsional stress:

$$\tau_t = 5.1 \times 10^3 Q / d_c^3 \quad \text{N/mm}^2$$

The stock diameter is therefore not to be less than:

$$d_c = d_t \sqrt[6]{1 + \frac{4}{3}\left(\frac{M}{Q}\right)^2} \quad \text{mm}$$

where:

d_t	=	Rudder stock diameter for the transmission of the rudder torque, in mm, as given in 24.3.1 above.
M	=	Bending moment, at the section of the rudder stock considered, in N-m.
Q	=	As specified in 24.2.1(b) above.

24.3.3 Increase in Diameter of Rudder Stocks for Special Cases

(a) In ships which may be frequently steered at a large helm angle when sailing at their maximum speed, such as fishing ships, the diameters of rudder stocks and pintles, as well as the section modulus of mainpieces, are not to be less than 1.1 times those required in this Chapter.

(b) In ships which might require quick steering, the diameter of rudder stocks is to be properly increased beyond the requirements in this Chapter.

24.3.4 Before significant reductions in rudder stock diameter due to the application of steels with yield stresses exceeding 235 N/mm^2 are granted, the Society may require the evaluation of the rudder stock deformations. Large deformations of the rudder stock are to be avoided in order to avoid excessive edge pressures in way of bearings.

24.4 Rudder Plates, Rudder Webs and Rudder Main Pieces

24.4.1 Permissible stresses

The section modulus and the web area of a horizontal section of the rudder blade made of ordinary hull structural steel are to be such that the following stresses will not be exceeded:

(a) Rudder blades without cut-outs (Fig. II 24-3 of this Chapter)

(i)	bending stress: σ_b	110/K	N/mm^2
(ii)	shear stress: τ	50/K	N/mm^2
(iii)	equivalent stress: $\sigma_c = \sqrt{\sigma_b^2 + 3\tau^2}$	120/K	N/mm^2

K = Material factor for the rudder plating as given in 1.5.2(a) of this Chapter

(b) Rudder blades with cut-outs (e.g. semi-spade rudders. Fig. II 24-4 of this Chapter)

(i)	bending stress: σ_b	75	N/mm^2
(ii)	shear stress in way of cut-outs: τ	50	N/mm^2
(iii)	equivalent stress: $\sigma_c = \sqrt{\sigma_b^2 + 3\tau^2}$	100	N/mm^2

Note: The stresses in (b) apply equally to high tensile and ordinary steels.

24.4.2 The thickness of the rudder side, top and bottom plating made of ordinary hull structural steel is not to be less than the value obtained from the following formula:

$$t = 5.5\, s\beta\sqrt{K}\sqrt{d_f + F \times 10^{-4}/A} + 2.5 \qquad \text{mm}$$

where:

d_f	=	Summer loadline draught of the ship, in m.
F	=	Rudder force, in N.
A	=	Rudder area, in m^2.
β	=	$\sqrt{1.1 - 0.5\left(\frac{s}{b}\right)^2}$, max. 1.00 for $\frac{b}{s} \geq 2.5$
s	=	Smallest unsupported width of plating, in m.
b	=	Greatest unsupported width of plating, in m.
K	=	Material factor for the rudder plating as given in 1.5.2(a) of this Part.

24.4.3 The plating is to be suitably stiffened by vertical and horizontal webs. The thickness of web plates is not to be less than 70% of the rudder side plating, however, not less than 8 mm. For higher tensile steels the material factor according to 1.5.2(c) of this Part is to be used.

24.4.4 Mainpiece

(a) The thickness of the plating of the rudder with plate frames may require to be increased in way of vertical webs which replace the mainpiece.

(b) Horizontal webs and vertical webs not replacing the mainpiece are to have the same thickness as the rudder plating, but plates forming the top and the bottom of the rudder are to be of increased thickness.

(c) Vertical webs replacing the mainpiece may be required to be increased in thickness.

(d) The spacing of vertical webs are generally not to be larger than 1.5 times the horizontal web spacing.

24.4.5 Single plate rudder

(a) The mainpiece diameter is to be calculated according to 24.3.1 and 24.3.2 of this Chapter respectively. For spade rudders the lower third may taper down to 0.75 times stock diameter.

(b) The blade thickness, t_b, is not to be less than the value obtained from the following formula:

$t_b = 1.5sV\sqrt{K} + 2.5$ mm

where:

s	=	Spacing of stiffening arms, in m, not to exceed 1 m.
V	=	Speed, in knots, as specified in 24.2.1(a) of this Chapter.
K	=	Material factor for the rudder plating as given in 1.5.2(a) of this Part.

(c) The thickness of the arms, t_a, is not to be less than the blade thickness, t_b:

$t_a \geq t_b$

(d) The section modulus, Z, of each set of arms about the axis of the rudder stock is not to be less than the value obtained from the following formula:

$Z = 0.5\ s\ x^2\ V^2K$ cm^3

where

s	=	Spacing of stiffening arms, in m, not to exceed 1 m.
V	=	Speed, in knots, as specified in 24.2.1(a) of this Chapter.
x	=	Horizontal distance from the aft edge of the rudder to the centerline of the rudder stock, in m.
K	=	Material factor as given in 1.5.2(a) or 1.5.2(c) of this Part respectively

24.4.6 Rudder Frame

(a) The rudder body is to be stiffened by horizontal and vertical rudder frames enabling it to withstand bending like a girder.

(b) The standard spacing of horizontal rudder frames is to be obtained from the following formula:

$0.2(L/100) + 0.4$ m

(c) The standard distance from the vertical rudder frame forming the rudder main piece to the adjacent vertical frame is to be 1.5 times the spacing of horizontal rudder frames.

(d) The thickness of rudder frames is not to be less than 8 mm or 70% of the thickness of the rudder plates as given in 24.4.2 of this Chapter, whichever is greater.

24.4.7 Connections of rudder blade structure with solid parts

(a) Solid parts in forged or cast steel, which house the rudder stock or the pintle, are normally to be provided with protrusions.

These protrusions are not required when the web plate thickness is less than:

- 10 mm for web plates welded to the solid part on which the lower pintle of a semi-spade rudder is housed and for vertical web plates welded to the solid part of the rudder stock coupling of spade rudders.
- 20 mm for other web plates.

(b) The solid parts are in general to be connected to the rudder structure by means of two horizontal web plates and two vertical web plates.

(c) Minimum section modulus of the connection with the rudder stock housing.

The section modulus of the cross-section of the structure of the rudder blade, in cm^3, formed by vertical web plates and rudder plating, which is connected with the solid part where the rudder stock is housed is to be not less than:

$$W_s = C_s\, d_c^3 \left[\frac{H_E - H_x}{H_E}\right] \frac{K}{K_s}\, 10^{-4} \qquad cm^3$$

where:

C_s = Coefficient, to be taken equal to:

1.0: if there is no opening in the rudder plating or if such openings are closed by a full penetration welded plate

1.5: if there is an opening in the considered cross-section of the rudder

d_c = Rudder stock diameter, in [mm], according to 24.3.2 of this Chapter

H_E = Vertical distance between the lower edge of the rudder blade and the upper edge of the solid part, in m

H_x = Vertical distance between the considered cross-section and the upper edge of the solid part, in m

K = Material factor for the rudder blade plating as given in 1.5.2(a) of this Part

K_s = Material factor for the rudder stock as given in 1.5.2(c) of this Part

The actual section modulus of the cross-section of the structure of the rudder blade is to be calculated with respect to the symmetrical axis of the rudder. The breadth of the rudder plating, in m, to be considered for the calculation of section modulus is to be not greater than:

$b = s_v + 2H_x / 3$ m

where:

s_v = Spacing between the two vertical webs, in m (see Fig. II 24-5 of this Chapter)

Where openings for access to the rudder stock nut are not closed by a full penetration welded plate, they are to be deducted.

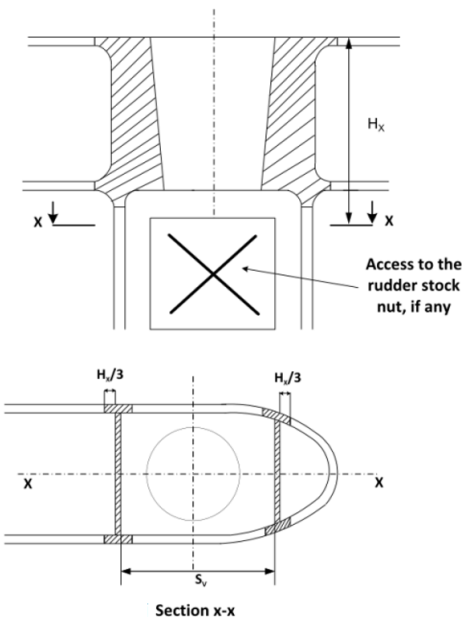

Fig. II 24-5
Cross-section of the Connection Between Rudder Blade Structure and Rudder Stock Housing

(d) The thickness of the horizontal web plates connected to the solid parts, in mm, as well as that of the rudder blade plating between these webs, is to be not less than the greater of the following values:

$t_H = 1.2\, t$ mm
$t_H = 0.045 d_s^2 / s_H$ mm

where:

t = Defined in 24.4.2 of this Chapter

d_s = Diameter, in mm, to be taken equal to:

d_c , as per 24.3.2 of this Chapter, for the solid part housing the rudder stock

d_p , as per 24.6.1 of this Chapter, for the solid part housing the pintle

s_H = Spacing between the two horizontal web plates, in mm

The increased thickness of the horizontal webs is to extend fore and aft of the solid part at least to the next vertical web.

(e) The thickness of the vertical web plates welded to the solid part where the rudder stock is housed as well as the thickness of the rudder side plating under this solid part is to be not less than the values obtained, in mm, from Table II 24-2 of this Chapter.

Table II 24-2
Thickness of Side Plating and Vertical Web Plates

Type of rudder	Thickness of vertical web plates (mm)		Thickness of rudder plating (mm)	
	Rudder blade without opening	Rudder blade with opening	Rudder blade without opening	Area with opening
Rudder supported by sole piece	1.2t	1.6t	1.2t	1.4t
Semi-spade and spade rudders	1.4t	2.0t	1.3t	1.6t
t = thickness of the rudder plating, in mm, as defined in 24.4.2.				

The increased thickness is to extend below the solid piece at least to the next horizontal web.

24.5 Rudder Stock Couplings

24.5.1 Horizontal flange couplings

(a) Coupling bolts are to be reamer bolts. The diameter of the coupling bolts is not to be less than the value obtained from the following formula:

$$d_b = 0.62\sqrt{\frac{d^3 K_b}{neK_s}} \qquad \text{mm}$$

where:

d = Stock diameter, in mm, the greater of the d_u or d_l as specified in 24.3.1 and 24.3.2 of this chapter.

n = Total number of reamer bolts, to be greater or equal to 6.

e = Mean distance of the bolt axes from the center of the bolt system, in mm.

K_b = Material factor for the bolt as specified in 1.5.2(c) of this Part.

K_s = Material factor for the stock as specified in 1.5.2(c) of this Part.

(b) The thickness of the coupling flanges is not to be less than the value obtained from the following formula:

$$t_f = d_b\sqrt{\frac{K_f}{K_b}} \qquad \text{mm}$$

where:

t_f	=	Thickness of coupling flanges, in mm. $\geq 0.9\ d_b$
d_b	=	Bolt diameter, in mm, for a number of bolts not exceeding 8.
K_b	=	Material factor for the bolt as specified in 1.5.2(c) of this Part.
K_f	=	Material factor for the flange as specified in 1.5.2(c) of this Part.

(c) The width of material outside the bolt holes is not to be less than $0.67\ d_b$.

(d) The welded joint between the rudder stock and the flange is to be made in accordance with Fig. II 24-6 of this Chapter or equivalent.

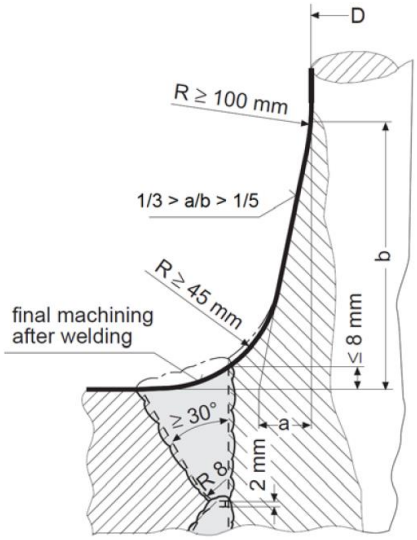

Fig. II 24-6
Welded Joint Between Rudder Stock and Coupling Flange

(e) Coupling bolts are to be fitted bolts and their nuts are to be locked effectively.

24.5.2 Cone couplings with key

(a) Cone couplings without hydraulic arrangements for mounting and dismounting the coupling should have a taper c on diameter of 1:8 - 1:12, where:

$c = (d_o - d_u) / l$ (see Fig. II 24-7 of this Chapter)

The cone coupling is to be secured by a slugging nut. The nut is to be secured, e.g. by a securing plate.

(b) The taper length, *l*, of rudder stocks fitted into the rudder blade and secured by a slugging nut is generally not be less than 1.5 times the rudder stock diameter, d_o, at the top of the rudder.

(c) For couplings between stock and rudder a suitable key is to be provided.

(d) The dimensions of the slugging nut are to be as follows:

External thread diameter: $d_g \geq 0.65\ d_o$

Height $h_n \geq 0.6\ d_g$

Outer diameter of nut: $d_n \geq 1.2\ d_u$ or $1.5\ d_g$ whichever is greater.

(e) Cone couplings with hydraulic arrangements for mounting and dismounting the coupling are to have a taper on diameter of 1:12 to 1:20.

(f) The data of the push-up oil pressure and the push-up length based on a calculation is to be submitted by the shipyard.

(g) The nuts fixing the rudder stocks are to be provided with efficient locking devices.

(h) Couplings of rudder stocks are to be properly protected from corrosion.

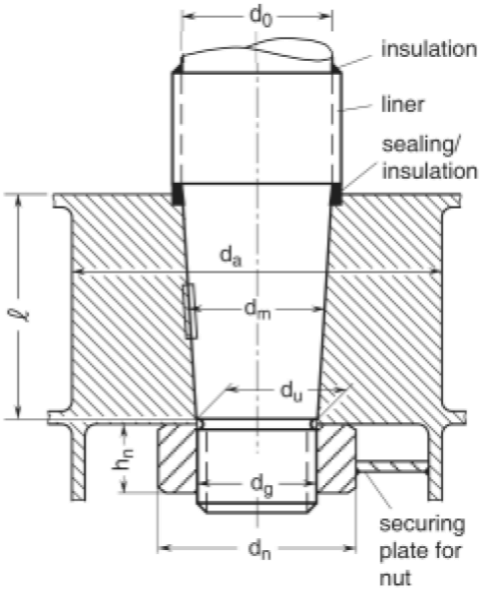

Fig. II 24-7
Cone Coupling with Key

(i) Dimensions of key

For couplings between stock and rudder a key is to be provided, the shear area of which, in cm^2, is not to be less than:

$$a_s = \frac{17.55Q_F}{d_k\sigma_{F1}}$$

where:

Q_F = design yield moment of rudder stock, in N·m
= $0.02664 \cdot d_t^3 / K$

Where the actual diameter d_{ta} is greater than the calculated diameter d_t , the diameter d_{ta} is to be used. However, d_{ta} applied to the above formula need not be taken greater than 1.145 d_t.

d_t = stock diameter, in mm, according to 24.3.1 of this Chapter
K = material factor for stock as given in 1.5.2(c) of this Part.
d_k = mean diameter of the conical part of the rudder stock, in mm, at the key
σ_{F1} = minimum yield stress of the key material, in N/mm^2

The effective surface area, in cm^2, of the key (without rounded edges) between key and rudder stock or cone coupling is not to be less than:

$$a_k = \frac{5Q_F}{d_k\sigma_{F2}}$$

where:

σ_{F2} = minimum yield stress of the key, stock or coupling material, in N/mm^2, whichever is less.

24.5.3 Vertical flange couplings

(a) Coupling bolts are to be reamer bolts and their diameters are not to be less than the value obtained from the following formula:

$$d_b = 0.81d\sqrt{\frac{K_b}{nK_s}} \qquad \text{mm}$$

where:

d	=	Stock diameter, in mm, as specified in 24.5.1 (a) of this Chapter.
n	=	Total number of bolts, which is not to be less than 8.
K_b	=	Material factor for the bolt as specified in 1.5.2 (c) of this Part.
K_s	=	Material factor for the stock as specified in 1.5.2 (c) of this Part.

(b) The first moment of area of the bolts about the center of the coupling, M, is to be not less than the value obtained from the following formula:

$$M = 0.00043\, d^3 \qquad \text{cm}^3$$

(c) The thickness of the coupling flanges must be at least equal to the bolt diameter, and the width of the flange material outside the bolt holes is not to be less than 0.67 d_b.

(d) Coupling bolts are to be fitted bolts and their nuts are to be locked effectively.

24.5.4 Cone couplings with special arrangements for mounting and dismounting the couplings

(a) Where the stock diameter exceeds 200 mm, the press fit is recommended to be effected by a hydraulic pressure connection. In such cases the cone is to be more slender, c ≈1:12 to ≈1:20.

In case of hydraulic pressure connections the nut is to be effectively secured against the rudder stock or the pintle.

For the safe transmission of the torsional moment by the coupling between rudder stock and rudder body the push-up pressure and the push-up length are to be determined according to 24.5.4(b) and 24.5.4(c) of this Chapter respectively.

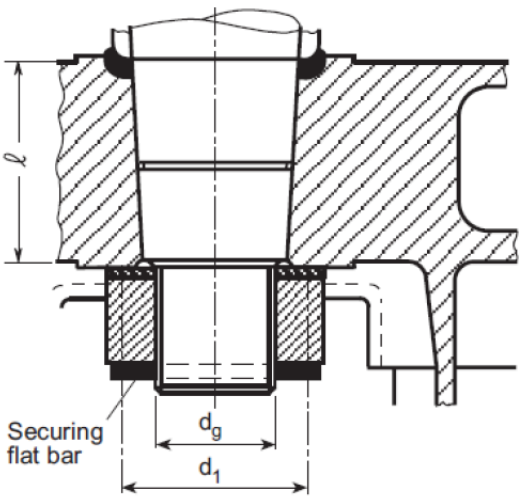

Fig. II 24-8
Cone Coupling without Key

(b) Push-up pressure

The push-up pressure, is not to be less than the greater of the two following values:

$$p_{req1} = \frac{2Q_F}{d_m^2 l \pi \mu_0} 10^3 \qquad \text{N/mm}^2$$

$$p_{req2} = \frac{6M_b}{l^2 d_m} 10^3 \qquad N/mm^2$$

where:

Q_F	=	design yield moment of rudder stock, as defined in 24.5.2(i) of this Chapter, in Nm
d_m	=	mean cone diameter in mm, see Fig. II 24-7 of this Chapter
l	=	cone length in mm
μ_0	=	frictional coefficient, equal to 0.15
M_b	=	bending moment in the cone coupling (e.g. in case of spade rudders), in Nm

It has to be proved by the designer that the push-up pressure does not exceed the permissible surface pressure in the cone. The permissible surface pressure, in N/mm², is to be determined by the following formula:

$$p_{perm} = \frac{0.8R_{eH}(1 - a^2)}{\sqrt{3 + a^4}} \qquad N/mm^2$$

where:

R_{eH}	=	minimum yield stress of the material of the gudgeon, in N/mm^2
a	=	d_m / d_a
d_m	=	diameter, in mm, see Fig. II 24-7 of this Chapter
d_a	=	outer diameter of the gudgeon to be not less than 1.5 d_m, see Fig. II 24-7 of this Chapter

(c) Push-up length

The push-up length Δl, in mm, Δl is to comply with the following formula:

$\Delta l_1 \leq \Delta l \leq \Delta l_2$

where:

$$\Delta l_1 = \frac{p_{req} d_m}{E\left(\frac{1 - a^2}{2}\right)c} + \frac{0.8R_{tm}}{c} \qquad mm$$

$$\Delta l_2 = \frac{1.6R_{eH} d_m}{Ec\sqrt{3 + a^4}} + \frac{0.8R_{tm}}{c} \qquad mm$$

R_{tm}	=	mean roughness, in mm taken equal to 0.01
c	=	taper on diameter according to 24.5.4(a) of this Chapter
E	=	Young's modulus of the material of the gudgeon, in N/mm^2 (kgf/mm^2)

d_m, R_{eH}, a, p_{req} = As specified in 24.5.4(b) above.

Notwithstanding the above, the push up length is not to be less than 2 mm.

Note: In case of hydraulic pressure connections the required push-up force P_e, in N, for the cone may be determined by the following formula:

$$P_e = p_{req} d_m \pi\, l \left(\frac{c}{2} + 0.02\right)$$

The value 0.02 is a reference for the friction coefficient using oil pressure. It varies and depends on the mechanical treatment and roughness of the details to be fixed. Where due to the fitting procedure a partial push-up effect caused by the rudder weight is given, this may be taken into account when fixing the required push-up length, subject to approval by the Society.

24.6 Pintles

24.6.1 The minimum pintle diameter is to be as follows:

$$d_p = 0.35\sqrt{BK_p} \qquad \text{mm}$$

where:
B = The reaction force in bearing, in N.
K_p = Material factor for the pintle as specified in 1.5.2(c) of this Part.

24.6.2 Pintles are to have a conical attachment to the cast part of rudder with a taper on diameter of:

1:8 to 1:12 for keyed and other manually assembled pintles applying locking by slugging nut.
1:12 to 1:20 for pintles mounted with oil injection and hydraulic nut.

24.6.3 The length of the taper is not to be less than the minimum pintle diameter d_p in 24.6.1 above.

24.6.4 The minimum dimensions of threads and nuts are to be determined according to 24.5.2(d) of this Chapter.

24.6.5 Push-up pressure for pintle bearings
The required push-up pressure p_{req} for pintle bearings, in N/mm², is to be determined by the following formula:

$$p_{req} = 0.4\frac{B_1 d_0}{d_m^2\, l}$$

where:
B_1 = Supporting force in the pintle bearing, in N
d_0 = Pintle diameter, in mm, see Fig. II 24-7 of this Chapter

The push up length is to be calculated similarly as in 24.5.4(c) of this Chapter, using required push-up pressure and properties for the pintle bearing.

24.7 Rudder Stock Bearings, Rudder Shaft Bearing and Pintle Bearings

24.7.1 Bearing surface

(a) The bearing surface, A_b, defined as the projected area: length x outside diameter of sleeve, is not to be less than the value obtained from the following formula:

$$A_b = \frac{B}{q_a} \qquad \text{mm}^2$$

where:
B = Reaction force, in N as specified in 24.6 above.
q_a = Allowable surface pressure as listed in Table II 24-3 of this Chapter.

(b) An adequate lubrication is to be ensured.

24.7.2 The length/diameter ratio of the bearing surface is not to be less than 1.0 or greater than 1.2, unless calculations are submitted and approved which show the clearance at both ends of the bearing is acceptable.

24.7.3 Metal bearings clearances are not to be less than $\frac{d_{bs}}{1000} + 1.0$ mm on the diameter. Where d_{bs}: Inter diameter of bush, in mm. If nonmetallic bearing material is applied, the bearing clearance is to be specially determined considering the materials swelling and thermal expansion properties. This clearance is not to be taken less than 1.5 mm on bearing

diameter unless a smaller clearance is supported by the manufacturer's recommendation and there is documented evidence of satisfactory service history with a reduced clearance.

24.7.4 Liners and bushes

(a) Rudder stock bearing

Liners and bushes are to be fitted in way of bearings. The minimum thickness of liners and bushes is to be equal to:

t_{min} = 8 mm for metallic materials and synthetic material
t_{min} = 22 mm for lignum material

(b) Pintle bearing

The thickness of any liner or bush, in mm, is neither to be less than:

$$t = 0.01\sqrt{B}$$

where:
B = Relevant bearing force, in N

nor than the minimum thickness defined in 24.7.4(a) of this Chapter.

Table II 24-3
Allowable Surface Pressure, q_a

Bearing material	q_a (N/mm^2)
Lignum-vitae	2.5
White metal, oil lubricated	4.5
Synthetic material with hardness between 60 and 70 Shore D(1)	5.5(2)
Steel(3) and bronze and hot-pressed bronze-graphite materials	7.0

Notes:
(1) Indentation hardness test at 23°C and 50% moisture, according to a recognized standard. Synthetic bearing materials are to be of an approved type.
(2) Surface pressures exceeding 5.5 N/mm^2 may be accepted in accordance with bearing manufacturer's specification and tests, but in no case more than 10 N/mm^2.
(3) Stainless and wear-resistant steel in an approved combination with stock liner. Higher values than given in the Table may be taken if they are verified by tests.

24.8 Rudder Carriers

Suitable rudder carriers are to be provided according to the form and the weight of the rudder, and care is to be taken to provide efficient lubrication at the support.

24.9 Prevention of Jumping

A suitable arrangement is to be provided to prevent the rudder from jumping due to wave shocks.

24.10 Rudder Trunk

24.10.1 Materials, welding and connection to hull

This requirement applies to both trunk configurations (extending or not below stern frame).

The steel used for the rudder trunk is to be of weldable quality, with a carbon content not exceeding 0.23% on ladle analysis and a carbon equivalent C_{EQ} not exceeding 0.41.

Plating materials for rudder trunks are in general not to be of lower grades than corresponding to class II as defined in 1.5 of this Part.

The weld at the connection between the rudder trunk and the shell or the bottom of the skeg is to be full penetration.

The fillet shoulder radius r, in mm (see Fig. II 24-9 of this Chapter) is to be as large as practicable and to comply with the following formulae:

$r = 60$	mm	when $\sigma \geq 40 / K$	N/mm^2
$r = 0.1\ d_l$ without being less than 30	mm	when $\sigma < 40 / K$	N/mm^2

where:

d_c = Rudder stock diameter axis defined in 24.3.2 of this Chapter.
σ = Bending stress in the rudder trunk, in N/mm^2.
K = Material factor as given in 1.5.2(a) or 1.5.2(c) of this Chapter respectively.

The radius may be obtained by grinding. If disk grinding is carried out, score marks are to be avoided in the direction of the weld. The radius is to be checked with a template for accuracy. Four profiles at least are to be checked. A report is to be submitted to the Surveyor.

Rudder trunks comprising of materials other than steel are to be specially considered by the Society.

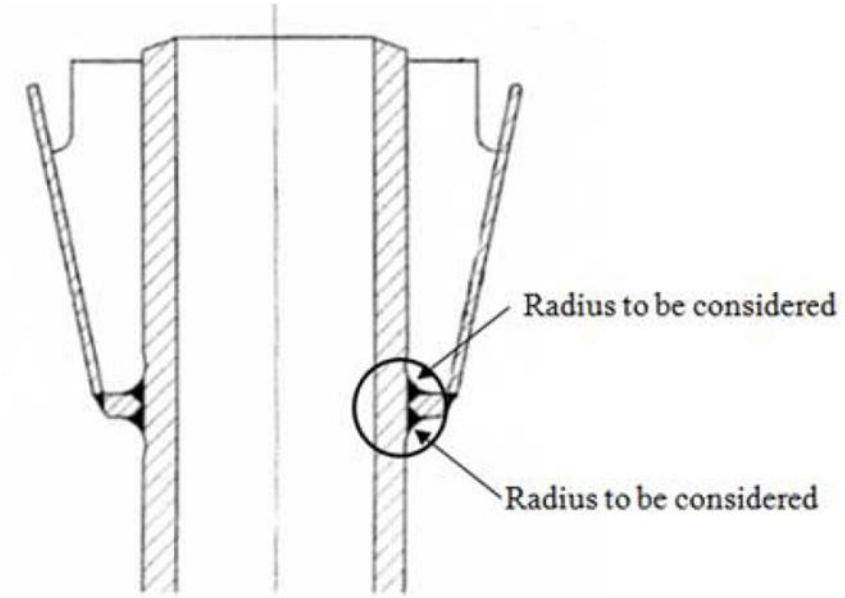

Fig. II 24-9
Fillet Shoulder Radius

24.10.2 Scantlings

Where the rudder stock is arranged in a trunk in such a way that the trunk is stressed by forces due to rudder action, the scantlings of the trunk are to be such that:

- the equivalent stress due to bending and shear does not exceed $0.35\ \sigma_F$,
- the bending stress on welded rudder trunk is to be in compliance with the following formula:

$$\sigma \leq \frac{80}{K} \quad N/mm^2$$

with:

σ = Bending stress in the rudder trunk, as defined in 24.10.1 of this Chapter
K = Material factor as given in 1.5.2(a) or 1.5.2(c) of this Chapter respectively, not to be taken less than 0.7
σ_F = Yield stress (N/mm^2) of material used

For calculation of bending stress, the span to be considered is the distance between the mid-height of the lower rudder stock bearing and the point where the trunk is clamped into the shell or the bottom of the skeg.

24.11 Guidelines for Calculating of Bending Moment and Shear Force Distribution

The evaluation of bending moments, shear forces and support forces for the system rudder–rudder stock may be carried out for some basic rudder types as outlined in IACS UR S10 Annex "Guidelines for calculation of bending moment and shear force distribution". Moments and forces on rudders of different types or shapes than those shown are to be calculated using alternative methods and will be considered based on submitted documents and calculations supporting the review.

Chapter 25
Equipment

25.1 General

25.1.1 All ships are to be provided with a complete equipment of the anchor, the chain, the towline and the mooring rope in accordance with the following requirements. The letter **E** will be placed after the symbol of classification of hull in the Register Book as **CR100 ✠ E**.

25.1.2 In the case of ships classed for a special or restricted service, if approved by the Society that requirements of the Rules are not necessary to apply, no equipment symbol is to be affixed.

25.1.3 The number and mass of anchors and the length and the size of the chain, the towline, and the mooring rope for a classed ship are to be determined from Table II 25-1. For ships having equipment numbers not more than 50 or more than 16,000, the number and mass of anchors, chain cables and mooring lines are to be determined by the Society.

25.1.4 Where 3 anchors are given in Table II 25-1, the third anchor is included as a spare bower anchor and is listed for guidance only, and is not required as a condition of classification.

25.1.5 The anchor, the chain, and the steel wire rope are to be tested and inspected in the presence of the Surveyor to the Society in accordance with the requirements of Part XI.

25.2 Equipment Number

25.2.1 The equipment given in Table II 25-1 is based on the "Equipment Number", EN, which is to be calculated as follows:

$$EN = \Delta^{\frac{2}{3}} + 2BH + 0.1A$$

Where:

Δ	=	Molded displacement to the summer load waterline, in ton.
B	=	Breadth of ship, in m, as specified in 1.2.2.
H	=	a + Σh, in m.
a	=	Vertical distance amidships from the summer load line to the top of uppermost continuous deck beam at side, in m.
Σh	=	Sum of the heights, in m, at centerline of superstructure and each tier of deck-houses having a breadth greater than 0.25B.
A	=	Sum of the profile area, in m^2, of the hull above summer load waterline, superstructures and deckhouses having a breadth greater than 0.25B, which are within the length of ship L.

(a) In calculation of H, sheer, camber and trim may be neglected. Where a deckhouse having a breadth greater than 0.25B is located above a deckhouse with a breadth of 0.25B or less, the wide deckhouse is to be included, but the narrow deckhouse ignored.

(b) Screens and bulwarks more than 1.5 m in height are to be regarded as parts of superstructure or deckhouse when calculating H and A. Where a screen or bulwark is of varying height, the portion exceeding 1.5 m in height is to be included.

25.2.2 Equipment for tug

For tugs, the term 2BH specified in 25.2.1 for calculating "Equipment Number", EN, is to be substituted by the following formula:

$$2\,(a\,B + \sum h\,b)$$

Where:

a	=	As specified 25.2.1 of this Chapter.
B	=	As specified 25.2.1 of this Chapter.
h	=	As specified 25.2.1 of this Chapter.
b	=	The breadth, in m, of the superstructure or deckhouse of each tier having a breadth greater than 0.25B.

25.2.3 For dredgers of unrestricted service having normal ship shape of underwater part of the hull, bucket ladders and gallows are not to be included in calculating for the "Equipment Number".

25.2.4 Equipment for Offshore Service Units

The requirements herein are intended for temporary mooring of a unit within a harbor or other areas of sheltered water. The "Equipment Number" equation is based on 2.5 m/s current, 25 m/s wind and a scope of 6 through 10, the scope being the ratio of length of chain paid out to the water depth. Anchors and chains are to be in accordance with Table II 25-1 and the numbers, mass and sizes of these are to be regulated by the equipment number (EN) obtained from the following equation:

$$\text{Equipment Number} = hk\left(\frac{\Delta}{h}\right)^{\frac{2}{3}} + m\sum qC_sC_hA_f + n\sum qC_sC_hA_p$$

Where:

k	=	1.0
m	=	2
n	=	0.1
h	=	Number of hulls or pontoons of the unit
Δ	=	Molded displacement of the unit in metric tons, excluding appendages, taken at the transit draft
$\sum qC_sC_hA_f$	=	Total frontal area exposed to the wind in m^2 at the transit draft
q	=	1.0 for hull, superstructure and deckhouses
	=	0.3 for other wind areas
C_s	=	Shape coefficient, as shown in Table III 13-1 of Part III of the Rules
C_h	=	Height coefficient as shown in Table III 13-2 of Part III of the Rules
A_f	=	Frontal projected area of each major element exposed to the wind, in m^2 , including columns, upper structure, deck members, superstructures and deck houses, trusses, large cranes, derrick substructure and drilling derrick as well as the portion of the hull above the transit waterline, as applicable to the type of unit. Wind shielding in accordance with acceptable methods may be considered.
$\sum qC_sC_hA_p$	=	Total profile area exposed to the wind in m^2 at the transit draft
A_p	=	Profile area of each major element exposed to the wind, in m^2, including columns, upper structure, deck members, superstructure and deck houses, trusses, large cranes, derrick substructure and drilling derrick as well as the portion of the hull above the transit waterline, as applicable to the type of unit. Wind shielding in accordance with acceptable methods may be considered.

In calculating the wind areas, the following conditions are to be considered:

(a) Tiers of superstructures or deck houses having a breadth at any point no greater than 0.25B, where B is the molded breadth of the unit, may be excluded, provided that their projected area is less than 1/100 of the total projected area of the unit.

(b) Screens and bulwarks more than 1.5 m in height are to be included.

(c) In the case of units with columns, the projected areas of all columns are to be included (i.e. no shielding allowance is to be taken). However, a shape coefficient of 0.5 may be used for the column's cylindrical surfaces.

(d) The block projected area of a clustering of deck houses may be used in lieu of calculating each individual area. In this case, the shape coefficient is to be taken as 1.1.

(e) Large isolated structures such as cranes and derricks are to be calculated individually using the appropriate shape coefficients from Table III 13-1 of Part III of the Rules.

(f) Small isolated structures with a projected area less than 1/100 of the total projected area of the unit may be excluded.

(g) Open truss work commonly used for derrick towers, booms and certain types of masts may be approximated by taking 30% of the projected block areas of both the front and back sides (i.e., 60% of the projected block area of one side for double sided truss work). The shape coefficient is to be taken in accordance with Table III 13-1 of Part III of the Rules.

Note: Lateral wind areas (larger side) of open truss work in dual derrick towers may be approximated by taking 25% of the projected block areas of both the front and back sides. In all open truss derrick towers, the wind areas in the V-door levels may be approximated by taking 20% of the projected block areas of both the front and back sides.

Alternatively, the effective wind areas may be calculated by using the results of wind tunnel tests or recognized computational fluid dynamics (CFD) software with a representative model of the unit or designated item, including all the elements that can contribute to the wind resistance, and subjected to the wind conditions equivalent to 25 m/s or over. Documentation and calculations demonstrating the effective wind areas by the alternative methodology are to be submitted for review.

Note: When the effective wind areas are obtained from the results of wind tests or CFD analysis and the percentage of wind area related to hull, superstructures and deckhouses cannot be estimated, a value not less than 75% (frontal) and 50% (profile) of the resulting effective wind areas may be used in the equipment numeral equation in lieu of the total frontal area and the total profile area, respectively.

For mobile offshore units where the temporary mooring system is arranged to face the wind in a direction other than the bow of the unit, special consideration will be made to adapt the calculation of the Equipment Number and the required anchors and chains to the specific mooring conditions.

Units with **DPS-II** or **DPS-III** notation intended for deep water operations may be provided with a single bower anchor installed onboard and half of the chain cable length given in Table II 25-1. When a unit with single bower anchor arrangement is anchored for periods longer than 21 days, additional means of anchoring or external assistance such as a stand-by towing ship will need to be provided and instructions in this regard are to be included in the Operating Manual.

Means are to be provided for stopping each cable as it is paid out, and the windlass should be capable of heaving in either cable.

The length of chain cable required by Table II 25-1 can be equally distributed between the two bower anchors connected and ready for use. Where the chain is arranged so that one anchor has a longer length for mooring it is to be verified that the windlass has sufficient capability for heaving in the longer length of chain.

Suitable arrangements are to be provided for securing the anchors and stowing the cables.

25.3 Anchors

25.3.1 Anchors are to be of stocked or stockless type of approved design and to be made in compliance with the requirements given in Chapter 12 of Part XI.

25.3.2 The mass of anchors given in Table II 25-1 is for the stockless type. Where the stocked anchor is used, the mass excluding the stock is to be 80% of the tabular mass for the stockless anchor.

25.3.3 The mass of each bower anchor given in Table II 25-1 is for anchors of equal mass. The mass of individual anchors may be ± 7% of the table mass provided that the total mass of all anchors is not less than that required for anchors of equal mass.

25.3.4 Where a special type of anchor with approved superior holding ability is used, the mass of the anchor less than the Table requirement, up to a maximum of 25% reduction for high holding power anchor and 50% for super high holding power anchors may be approved by the Society. However, supper high holding power anchor mass is not to exceed 1,500 kg.

25.3.5 For tugs with service restricted, when approved by the Society, the mass of bower anchor specified in Table II 25-1 may be reduced:

(a) to correspond to that required for equipment number 0.5EN for Protected Waters Service.

(b) to correspond to two Equipment numeral below that required for EN for other service restriction.

25.3.6 For ships with length less than 90 m and with service restricted, mass of one of the two anchors may be reduced to 85% of the mass required in Table II 25-1.

25.4 Anchor Cables

25.4.1 Bower anchor cables are to be stud link chains of Grades E1, E2 or E3 corresponding to the nominal diameter of the chain and equipment number given in Table II 25-1. In the case of superior holding ability anchor, the Grade E1 chain is not to be used.

25.4.2 Stream anchor cables

(a) Stream anchor cables are to be of stud link chains, short link chains or steel wire ropes. When the steel wire rope is used, its construction is not to be less than 72 wires made up into 6 strands.

(b) The breaking strength of stream anchor cables corresponding to the construction and nominal diameter of cables as specified in relation to Chapters of Part XI is not to be less than that given in Table II 25-1.

25.4.3 Chains and steel wire ropes for anchors are to be made in compliance with the requirements given in Chapters 13 and 14 of Part XI respectively.

25.4.4 For tugs with service restricted, when approved by the Society, the diameter of chain cable required in Table II 25-1 may be reduced:

(a) to correspond to that required for equipment number 0.5EN for Protected Waters Service.

(b) to correspond to two Equipment numeral below that required for EN for other service restriction.

25.4.5 For tugs with service restriction of Protected Waters Service, the length of chain cable may be reduced to 50% of the requirement for equipment number 0.5EN in Table II 25-1.

25.5 Towlines and Mooring Ropes

25.5.1 Material

(a) Towlines and mooring ropes may be of steel wires, natural fibre or synthetic fibre ropes. The breaking strength of the towline and the mooring rope is given in Table II 25-1.

(b) Irrespective of the breaking strength, the diameter of the fibre rope is not to be less than 20 mm.

(c) Where it is proposed to use the synthetic fibre rope, the size and construction are to be specially considered.

25.5.2 The length of the individual mooring rope may be reduced by 7% of the Table length, provided that the total length of the mooring rope is not less than that obtained from the Table.

25.5.3 Towlines are not be required as a condition of classification. The towlines listed in Table II 25-1 are intended as a guide.

25.5.4 Steel wire ropes used for the towline or mooring rope are to be of a flexible construction. Where wire ropes in construction of 6×12 and 6×24 are used, the diameter of the rope is not to be more than 25 mm and 33 mm respectively, however, the construction of 6×30 and 6×37, any diameter is permitted.

25.5.5 For ships having an A/EN ratio greater than 0.9, the number of mooring ropes given in Table II 25-1 is to be increased by the number given below:

A/EN Ratio	Increase No. of Mooring Rope
1.1 ≥ A/EN > 0.9	1
1.2 ≥ A/EN > 1.1	2
A/EN > 1.2	3

Where:
A = The profile area defined in 25.2 of this Chapter.
EN = Equipment number determined by 25.2 of this Chapter.

25.5.6 It is the responsibility of the owner to replace or make good towlines and mooring ropes as opportunity occurs.

25.6 Arrangements for Working and Stowing of Anchors and Cables

25.6.1 The windlass is to be of substantial construction and sufficient power suitable for the size of the chain and the mass of the anchor and the chain.

25.6.2 The windlass is to be securely bolted to a substantial bed on the deck which is to be reinforced and suitably supported to the Surveyor's satisfaction.

25.6.3 Care is to be taken to ensure an easy lead of the cable from the windlass to the anchor and the chain locker.

25.6.4 Hawse pipe

(a) The hawse pipe is to be of ample strength and suitable size to house the anchor.

(b) The hawse pipe is to have substantial chafing lips and the easiest possible lead for minimizing the nip on the cable.

(c) The hawse pipe for the stockless anchor is to be provided with ample clearances to satisfy the Surveyor that there is no risk of the anchor jamming in the hawse pipe, when the anchor is shipped and unshipped.

25.6.5 The shell plating and framing in way of the hawse pipe are to be properly strengthened.

25.6.6 The hawse pipe, when in position, is to be thoroughly tested for watertightness by means of a hose in which the water pressure is not to be less than 0.2 MPa.

25.6.7 Chain locker

(a) The chain locker is to be divided into two parts of sufficient capacity for separate stowage of the port and starboard chain cables.

(b) The chain locker is to provide an easy direct lead for the chain cable into the hawse pipe when the total length of the chain cable is stowed.

(c) The chain locker is to have provisions for securing the inboard ends of the cable to the structure.

(d) Chain locker and chain pipe are to be watertight up to the weather deck. Chain pipes through which anchor cables are led are to be provided with closing appliances to minimize water ingress, such as steel plates with cutouts to accommodate chain links or canvas hood with a lashing arrangement that maintains the cover in the secured position.

(e) Where a means of access to chain pipes or cable lockers is located below the weather deck, the access cover and its securing arrangements are to be in accordance with recognized standards or equivalent for watertight manhole covers. Butterfly nuts and/or hinged bolts are prohibited as the securing mechanism for the access cover.

25.7 Emergency Towing Procedures

25.7.1 Ships are to be provided with a ship-specific emergency towing procedure that describes the towing procedure to be used in emergency situation.

25.7.2 The procedure specified in 25.7.1 is to be based on existing arrangements and equipment available on board the ship and is to include the following information:

(a) drawings of fore and aft deck showing possible emergency towing arrangements;

(b) inventory of equipment on board that can be used for emergency towing;

(c) means and methods of communication; and

(d) sample procedures to facilitate the preparation for and conducting of emergency towing operations.

25.8 Towing and Mooring Fittings

25.8.1 General

(a) The requirements in this section apply to shipboard fittings used for normal towing and normal mooring and their supporting hull structures.

(b) Ships are to be adequately provided with towing and mooring fittings.

(c) The scantlings of supporting structures are to be built at least with the gross scantlings obtained by adding the corrosion addition specified in 25.8.2(e) and 25.8.3(e) to the net scantlings obtained by applying the criteria specified in this section.

(d) The scantlings of supporting structures are to be in accordance with the relevant chapters or sections in addition to this section.

25.8.2 Towing Fittings

(a) Arrangement of Towing Fittings

(i) Towing fittings are to be located on longitudinals, beams or girders, which are parts of the deck construction so as to facilitate efficient distribution of the towing load.

(ii) When towing fittings cannot be located as specified in (i), towing fittings are to be arranged on reinforced members.

(b) Design Load

Design load, see Fig. II 25-1, for towing fittings and their supporting structures are to be as specified in (i) to (vi) below:

(i) For normal towing operations (e.g. harbour / manoeuvring), the design load on the line (see Fig. II 25-1) is to be 1.25 times the intended maximum towing load.

(ii) For other types of towing (e.g. escort), the design load on the line is to be the breaking strength of the towing line specified in Table II 25-1 according to the equipment number determined in 25.2 of this Chapter.

(iii) The design load on fittings is to take into account all acting loads.

(iv) The point where the towing force acts on towing fittings is to be taken as the attachment point of the towing line.

(v) The design load on fittings is to take into account the total design load on the line specified in (i) and (ii), but need not exceed twice the design load on the line.

(vi) If the design load on fittings specified in (ii) to (v) is less than the intended towing load stipulated in the construction specifications for the towing fittings and their supporting structures used for towing operations specified in (ii), the design load on fittings is to be not less than the intended towing load.

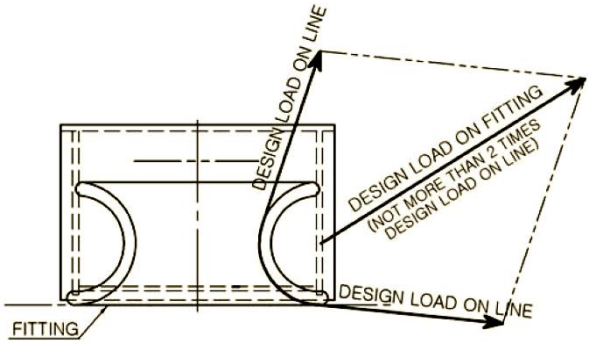

Fig. II 25-1
Design load

(c) Selection of Towing Fittings

Towing fittings are generally to be specified according to standards approved by the Society.

(d) Allowable stresses of supporting structures are not to be more than below:

(i) Normal stress: 100% of the specified yield point for the material used

(ii) Shearing stress: 60% of the specified yield point for the material used

(e) The corrosion addition of supporting structures is not to be less than the following values:

(i) IACS Common Structural Rules, if applicable.

(ii) The value will be considered by the Society, but is not to be less than 2 mm.

(f) Safe Working Load (SWL)

(i) For towing fittings and their supporting structures used for towing operations specified in (b)(i), the SWL is not to exceed 80% of the design load on fittings specified in (b)(i), (iii), (iv), and (v).

(ii) For towing fittings and their supporting structures used for towing operations specified in (b)(ii), the SWL is not to exceed the design load on fittings specified in (b)(ii) to (vi).

(iii) For towing fittings and their supporting structures used for towing operations specified in both (b)(i) and (b)(ii), the SWL is not to exceed the greater of the design loads.

(iv) The SWL of each fitting is to be marked by weld beads or equivalent on the fitting.

25.8.3 Mooring Fittings

(a) Arrangement of Mooring Fittings

(i) Mooring fittings are to be located on longitudinals, beams or girders, which are parts of the deck construction so as to facilitate efficient distribution of the mooring load.

(ii) When mooring fittings cannot be located as specified in (i), the mooring fittings are to be arranged on reinforced members.

(b) Design Load

Design load, see Fig. II 25-1, for mooring fittings and their supporting structures are to be as specified in (i) to (vii) below:

(i) The design load on the line (see Fig. II 25-1) is to be 1.25 times the breaking strength of the mooring line specified in Table II 25-1 according to the equipment number determined in 25.2.

(ii) The design load on fittings is to take into account all acting loads.

(iii) The point where the mooring force acts on mooring fittings is to be taken as the attachment point of the mooring line.

(iv) The design load on fittings is to take into account the total design load on the line specified in (i) (see Fig. II 25-1), but need not exceed twice the design load on the line.

(v) If the design load on fittings specified in (i) to (iv) is less than 1.25 times the intended mooring load stipulated in the construction specifications for the mooring fittings and their supporting structures used for mooring operations specified in (i), the design load on the fittings is to be at least 1.25 times the intended mooring load.

(vi) The design load applied to supporting hull structures for mooring winches is to be 1.25 times the intended maximum brake holding load.

(vii) The design load applied to supporting hull structures for capstans is to be 1.25 times the intended maximum hauling-in force.

(c) Selection of Mooring Fittings

Mooring fittings are generally to be specified according to standards approved by the Society.

(d) Allowable stresses of supporting structures are not to be more than below:

(i) Normal stress: 100% of the specified yield point for the material used

(ii) Shearing stress: 60% of the specified yield point for the material used

(e) The corrosion addition of supporting structures is not to be less than the following values:

(i) IACS Common Structural Rules, if applicable.

(ii) The value will be considered by the Society, but is not to be less than 2mm

(f) Safe Working Load (SWL)

(i) The SWL is not to exceed 80% of the design load on fittings specified in (b)(i) to (v) or the design load specified in (b)(vi) or (vii).

(ii) The SWL of each fitting, excluding mooring winches and capstan, is to be marked by weld beads or equivalent on the fitting.

25.9 Towing and Mooring Arrangements Plan

25.9.1 The SWL for the intended use for each shipboard fitting should be noted in the towing and mooring arrangements plan available on board for the guidance of the Master.

25.9.2 Information provided on the plan should include in respect of each shipboard fitting:

(a) location on the ship

(b) fitting type

(c) SWL

(d) purpose (mooring/harbour towing/escort towing)

(e) method of applying load of towing or mooring line including limiting fleet angles.

Table II 25-1
Anchor, Chain Cable and Ropes

Equipment number		Equipment numeral	Bower anchor		Stream anchor		Stud link chain cable for bower anchors				Wire rope or chain for stream anchor		Tow line (1 length per ship)		Mooring ropes		
			Number	Mass per anchor	Number	Mass per anchor	Total length	Nominal diameter (mm)			Length	Breaking strength	Length	Breaking Strength	Number	Length of each rope	Breaking strength
Over	Up to			kg		kg	m	Grade E1	Grade E2	Grade E3	m	kN	m	KN		m	kN
50	70	E51	2	180	1	60	220	14	12.5		80	65	180	98	3	80	34
70	90	E52	2	240	1	80	220	16	14		85	74	180	98	3	100	37
90	110	E53	2	300	1	100	247.5	17.5	16		85	81	180	98	3	110	39
110	130	E54	2	360	1	120	247.5	19	17.5		90	89	180	98	3	110	44
130	150	E55	2	420	1	140	275	20.5	17.5		90	98	180	98	3	120	49
150	175	E56	2	480	1	165	275	22	19		90	108	180	98	3	120	54
175	205	E57	2	570	1	190	302.5	24	20.5		90	118	180	112	3	120	59
205	240	E58	2	660			302.5	26	22	20.5			180	129	4	120	64
240	280	E59	2	780			330	28	24	22			180	150	4	120	69
280	320	E60	2	900			357.5	30	26	24			180	174	4	140	74
320	360	E61	2	1020			357.5	32	28	24			180	207	4	140	78
360	400	E62	2	1140			385	34	30	26			180	224	4	140	88
400	450	E63	2	1290			385	36	32	28			180	250	4	140	98
450	500	E64	2	1440			412.5	38	34	30			180	277	4	140	108
500	550	E65	2	1590			412.5	40	34	30			190	306	4	160	123
550	600	E66	2	1740			440	42	36	32			190	338	4	160	133
600	660	E67	2	1920			440	44	38	34			190	371	4	160	147
660	720	E68	2	2100			440	46	40	36			190	406	4	160	157
720	780	E69	2	2280			467.5	48	42	36			190	441	4	170	172
780	840	E70	2	2460			467.5	50	44	38			190	480	4	170	186
840	910	E71	2	2640			467.5	52	46	40			190	518	4	170	201
910	980	E72	2	2850			495	54	48	42			190	559	4	170	216
980	1060	E73	2	3060			495	56	50	44			200	603	4	180	230
1060	1140	E74	2	3300			495	58	50	46			200	647	4	180	250
1140	1220	E75	2	3540			522.5	60	52	46			200	691	4	180	270
1220	1300	E76	2	3780			522.5	62	54	48			200	738	4	180	284
1300	1390	E77	2	4050			522.5	64	56	50			200	786	4	180	309
1390	1480	E78	2	4320			550	66	58	50			200	836	4	180	324
1480	1570	E79	2	4590			550	68	60	52			220	888	5	190	324
1570	1670	E80	2	4890			550	70	62	54			220	941	5	190	333
1670	1790	E81	2	5250			577.5	73	64	56			220	1024	5	190	353
1790	1930	E82	2	5610			577.5	76	66	58			220	1109	5	190	378
1930	2080	E83	2	6000			577.5	78	68	60			220	1168	5	190	402
2080	2230	E84	2	6450			605	81	70	62			240	1259	5	200	422

Table II 25-1
Anchor, Chain Cable and Ropes (continued)

Equipment number		Equipment numeral	Bower anchor		Stream anchor		Stud link chain cable for bower anchors				Wire rope or chain for stream anchor		Tow line (1 length per ship)		Mooring ropes		
			Number	Mass per anchor	Number	Mass per anchor	Total length	Nominal diameter (mm)			Length	Breaking strength	Length	Breaking strength	Number	Length of each rope	Breaking strength
Over	Up to			kg		kg	m	Grade E1	Grade E2	Grade E3	m	kN	m	kN		m	kN
2230	2380	E85	2	6900			605	84	73	64			240	1356	5	200	451
2380	2530	E86	2	7350			605	87	76	66			240	1453	5	200	480
2530	2700	E87	2	7800			632.5	90	78	68			260	1471	6	200	480
2700	2870	E88	2	8300			632.5	92	81	70			260	1471	6	200	490
2870	3040	E89	2	8700			632.5	95	84	73			260	1471	6	200	500
3040	3210	E90	2	9300			660	97	84	76			280	1471	6	200	520
3210	3400	E91	2	9900			660	100	87	78			280	1471	6	200	554
3400	3600	E92	2	10500			660	102	90	78			280	1471	6	200	588
3600	3800	E93	2	11100			687.5	105	92	81			300	1471	6	200	618
3800	4000	E94	2	11700			687.5	107	95	84			300	1471	6	200	647
4000	4200	E95	2	12300			687.5	111	97	87			300	1471	7	200	647
4200	4400	E96	2	12900			715	114	100	87			300	1471	7	200	657
4400	4600	E97	2	13500			715	117	102	90			300	1471	7	200	667
4600	4800	E98	2	14100			715	120	105	92			300	1471	7	200	677
4800	5000	E99	2	14700			742.5	122	107	95			300	1471	7	200	686
5000	5200	E100	2	15400			742.5	124	111	97			300	1471	8	200	686
5200	5500	E101	2	16100			742.5	127	111	97			300	1471	8	200	696
5500	5800	E102	2	16900			742.5	130	114	100			300	1471	8	200	706
5800	6100	E103	2	17800			742.5	132	117	102			300	1471	9	200	706
6100	6500	E104	2	18800			742.5		120	107					9	200	716
6500	6900	E105	2	20000			770		124	111					9	200	726
6900	7400	E106	2	21500			770		127	114					10	200	726
7400	7900	E107	2	23000			770		132	117					11	200	726
7900	8400	E108	2	24500			770		137	122					11	200	735
8400	8900	E109	2	26000			770		142	127					12	200	735
8900	9400	E110	2	27500			770		147	132					13	200	735
9400	10000	E111	2	29000			770		152	132					14	200	735
10000	10700	E112	2	31000			770			137					15	200	735
10700	11500	E113	2	33000			770			142					16	200	735
11500	12400	E114	2	35500			770			147					17	200	735
12400	13400	E115	2	38500			770			152					18	200	735
13400	14600	E116	2	42000			770			157					19	200	735
14600	16000	E117	2	46000			770			162					21	200	735

Chapter 26

Navigation Bridge Visibility

26.1 General

The requirements in this Chapter apply to ships of not less than 55 m in length overall (L_{OA}).

26.2 View of the Sea Surface

The view of the sea surface from the conning position shall not be obscured by more than two ship length overall or 500 m, whichever is less, forward of the bow to 10° on either side under all conditions of the ship's draught, trim and deck cargo.

26.3 Blind Sectors

Each blind sector caused by cargo, cargo gear or other obstructions outside of the wheelhouse forward of the beam obstructing the view of the sea surface as seen from the conning position is not to exceed 10°. The total arc of blind sectors shall not exceed 20 degrees. The clear sectors between blind sectors shall be at least 5 degrees. However, in the view described in 26.2, each individual blind sector shall not exceed 5 degrees.

26.4 Horizontal Field of Vision

26.4.1 The horizontal field of vision from the conning position is to extend over an arc of not less than 225°, that is from more than 22.5° abaft the beam on one side, through forward, to more than 22.5° abaft the beam on the other side.

26.4.2 From each bridge wing the horizontal field of vision is to extend over an arc from at least 45° on the opposite bow through right ahead and then aft to 180° from dead ahead.

26.4.3 From main steering position the horizontal filed of vision is to extend over an arc from right ahead to at least 60°on each side.

26.5 Ship's Side

The ship's side is to be visible from the bridge wing. The arrangement of bridge may refer to IMO MSC.1/Circ. 1350.

26.6 Bridge Front Windows

26.6.1 The height of the lower edge of bridge front windows above the deck is to kept as low as possible.

26.6.2 The upper edge of the bridge front windows is to allow a forward view of the horizon when the ship is pitching in heavy seas for a person with an eye height of 1800 mm above bridge deck at the conning position. The Society, if satisfied that a 1800 mm height of eye is unreasonable and impractical, may allow reduction of the height of eye but not to less than 1600 mm.

26.6.3 To help avoid reflections, the bridge front windows are to be inclined from the vertical plane top out, at an angle of not less than 10° and not more than 25°.

26.6.4 At all times, regardless of weather conditions, at least two of the bridge front windows are to provide a clear view and, depending on the bridge layout, an additional number of clear view windows are to be provided.

26.7 Windows

26.7.1 Framing between bridge windows is to be kept to minimum and is not to be installed immediately forward of any workstation.

26.7.2 Polarized and tinted windows are not to be fitted.

26.8 Ships of Unconventional Design

26.8.1 With ships of unconventional design which, in the opinion of the society, the arrangements are to be provided to achieve a level of visibility that is as near as practical to those prescribed in this Chapter.

26.9 Navigation Bridge Visibility during Ballast Water Exchange

26.9.1 During the intermediate stages of ballast water exchange, navigation bridge visibility need not comply with 26.2 and 26.4.

Chapter 27

Strength and Securing of Small Hatches, Fore Deck Fittings and Equipment on the Exposed Fore Deck

27.1 General

27.1.1 This Chapter provides strength requirements to resist green sea forces for the small hatches and securing devices fitted on the exposed fore deck, air pipes, ventilator pipes and their closing devices, and the securing of windlasses located within the forward quarter length.

27.1.2 Small hatches in these requirements are hatches designed for access to spaces below the deck and are capable of being closed weather-tight or watertight, as applicable. Their opening is normally 2.5 square meters or less.

27.1.3 Hatches designed for use of emergency escape are to comply with these requirements, except 27.4.2(a)(i) and (ii), 27.4.3(c) and 27.4.4.

27.1.4 For windlasses, these requirements are additional to those appertaining to the anchor and chain performance criteria of the Society.

27.1.5 Where mooring winches are integral with the anchor windlass, they are to be considered as part of the windlass.

27.2 Application

27.2.1 For ships that are contracted for construction on or after 1 January 2004 on the exposed deck over the forward 0.25L, applicable to:

All ship types of sea going service of length 80 m or more, where the height of the exposed deck in way of the item is less than 0.1L or 22 m above the summer load waterline, whichever is the lesser.

ship27.2.2The ship length L is as defined in 1.2.1.

27.3 Implementation

27.3.1 Ships that are described in 27.2.1 that are contracted for construction on or after 1 January 2004 are to comply by the time of delivery.

27.4 Small Hatches

27.4.1 Strength

(a) For small rectangular steel hatch covers, the plate thickness, stiffener arrangement and scantlings are to be in accordance with Table II 27-1, and Fig. II 27-1. Stiffeners, where fitted, are to be aligned with the metal-to-metal contact points, required in 27.4.3(a), see Fig. II 27-1. Primary stiffeners are to be continuous. All stiffeners are to be welded to the inner edge stiffener, see Fig. II 27-2.

(b) The upper edge of the hatchway coamings is to be suitably reinforced by a horizontal section, normally not more than 170 to 190 mm from the upper edge of the coamings.

(c) For small hatch covers of circular or similar shape, the cover plate thickness and reinforcement is to provide strength and stiffness equivalent to the requirements for small rectangular hatches specified in 27.4.

(d) For small hatch covers constructed of materials other than steel, the required scantlings are to provide equivalent strength.

27.4.2 Primary securing devices

(a) Small hatches located on exposed fore deck subject to the application of these requirements are to be fitted with primary securing devices such that their hatch covers can be secured in place and weather-tight by means of a mechanism employing any one of the following methods:

(i) Butterfly nuts tightening onto forks (clamps),

(ii) Quick acting cleats, or

(iii) Central locking device.

(b) Dogs (twist tightening handles) with wedges are not acceptable.

27.4.3 Requirements for primary securing

(a) The hatch cover is to be fitted with a gasket of elastic material. This is to be designed to allow a metal to metal contact at a designed compression and to prevent over compression of the gasket by green sea forces that may cause the securing devices to be loosened or dislodged. The metal-to-metal contacts are to be arranged close to each securing device in accordance with Fig. II 27-1, and of sufficient capacity to withstand the bearing force.

(b) The primary securing method is to be designed and manufactured such that the designed compression pressure is achieved by one person without the need of any tools.

(c) For a primary securing method using butterfly nuts, the forks (clamps) are to be of robust design. They are to be designed to minimize the risk of butterfly nuts being dislodged while in use; by means of curving the forks upward, a raised surface on the free end, or a similar method. The plate thickness of unstiffened steel forks is not to be less than 16 mm. An example arrangement is shown in Fig. II 27-2.

(d) For small hatch covers located on the exposed deck forward of the fore-most cargo hatch, the hinges are to be fitted such that the predominant direction of green sea will cause the cover to close, which means that the hinges are normally to be located on the fore edge.

(e) On small hatches located between the main hatches, for example between Nos. 1 and 2, the hinges are to be placed on the fore edge or outboard edge, whichever is practicable for protection from green water in beam sea and bow quartering conditions.

27.4.4 Secondary securing device

Small hatches on the fore deck are to be fitted with an independent secondary securing device e.g. by means of a sliding bolt, a hasp or a backing bar of slack fit, which is capable of keeping the hatch cover in place, even in the event that the primary securing device became loosened or dislodged. It is to be fitted on the side opposite to the hatch cover hinges.

Table II 27-1
Scantlings for Small Steel Hatch Covers on the Fore Deck

Nominal size (mm x mm)	Cover plate thickness (mm)	Primary stiffeners	Secondary stiffeners
		Flat Bar(mm x mm); number	

630 x 630	8	-	-
630 x 830	8	100 x 8 ; 1	-
830 x 630	8	100 x 8 ; 1	-
830 x 830	8	100 x 10 ; 1	-
1030 x 1030	8	120 x 12 ; 1	80 x 8 ; 2
1330 x 1330	8	150 x 12 ; 2	100 x 10 ; 2

27.5 Fore Deck Fittings and Equipment

27.5.1 Applied loading

(a) Air pipes, ventilator pipes and their closing devices

(i) The pressures p, in kN/m^2 acting on air pipes, ventilator pipes and their closing devices may be calculated from:

$$p = 0.5\rho V^2 C_d C_s C_p$$

where:

ρ	=	Density of sea water (1.025 t/m^3).
V	=	Velocity of water over the fore deck (13.5 m/sec).
C_d	=	Shape coefficient,
	=	0.5 for pipes,
	=	1.3 for air pipe or ventilator heads in general,
	=	0.8 for an air pipe or ventilator head of cylindrical form with its axis in the vertical direction.
C_s	=	Slamming coefficient (3.2).
C_p	=	Protection coefficient,
	=	0.7 for pipes and ventilator heads located immediately behind a breakwater or forecastle,
	=	1.0 elsewhere and immediately behind a bulwark.

(ii) Forces acting in the horizontal direction on the pipe and its closing device may be calculated from 27.5.1(a)(i) using the largest projected area of each component.

(b) Windlasses

(i) The following pressures and associated areas are to be applied (see Fig. II 27-3):

(1) 200 kN/m^2 normal to the shaft axis and away from the forward perpendicular, over the projected area in this direction,

(2) 150 kN/m^2 parallel to the shaft axis and acting both inboard and outboard separately, over the multiple of f times the projected area in this direction, where f is defined as:

f = 1+ B/H , but not greater than 2.5.

where:

B	=	Width of windlass measured parallel to the shaft axis.
H	=	Overall height of windlass.

(ii) Forces in the bolts, chocks and stoppers securing the windlass to the deck are to be calculated. The windlass is supported by N bolt groups, each containing one or more bolts, see Fig. II 27-4.

(iii) The axial force R_i in bolt group (or bolt) i, positive in tension, may be calculated from:

$$R_{xi} = \frac{P_x h x_i A_i}{I_x}$$

$$R_{yi} = \frac{P_y h y_i A_i}{I_y}$$
$$R_i = R_{xi} + R_{yi} - R_{si}$$

where:

P_x	=	Force (kN) acting normal to the shaft axis,
P_y	=	Force (kN) acting parallel to the shaft axis, either inboard or outboard whichever gives the greater force in bolt group i,
h	=	Shaft height (cm) above the windlass mounting,
x_i, y_i	=	x and y coordinates of bolt group i from the centroid of all N bolt groups, positive in the direction opposite to that of the applied force (cm),
A_i	=	Cross sectional area (cm^2) of all bolts in group i,
I_x	=	$\Sigma A_i x_i^2$ for N bolt groups,
I_y	=	$\Sigma A_i y_i^2$ for N bolt groups,
R_{si}	=	Static reaction at bolt group i, due to weight of windlass.

(iv) Shear forces F_{xi}, F_{yi} applied to the bolt group i, and the resultant combined force F_i may be calculated from:

$$F_{xi} = \frac{P_x - \alpha g M}{N}$$
$$F_{yi} = \frac{P_y - \alpha g M}{N} \text{ and}$$
$$F_i = \left(F_{xi}^2 + F_{yi}^2\right)^{0.5}$$

where:

α	=	Coefficient of friction (0.5),
M	=	Mass of windlass (t),
g	=	Gravity acceleration (9.81 m/sec^2),
N	=	Number of bolt groups.

(v) Axial tensile and compressive forces in 27.5.1(b)(iii) and lateral forces in 27.5.1(b)(iv) are also to be considered in the design of the supporting structure.

27.5.2 Strength requirements

(a) Air pipes, ventilator pipes and their closing devices

(i) Bending moments and stresses in air and ventilator pipes are to be calculated at critical positions: at penetration pieces, at weld or flange connections, at toes of supporting brackets. Bending stresses in the net section are not to exceed 0.8 σ_y, where σ_y is the specified minimum yield stress or 0.2% proof stress of the steel at room temperature. Irrespective of corrosion protection, a corrosion addition to the net section of 2.0 mm is then to be applied.

(ii) For standard air pipes of 760 mm height closed by heads of not more than the tabulated projected area, pipe thicknesses and bracket heights are specified in Table II 27-2. Where brackets are required, three or more radial brackets are to be fitted. Brackets are to be of gross thickness 8 mm or more, of minimum length 100 mm, and height according to Table II 27-2 but need not extend over the joint flange for the head. Bracket toes at the deck are to be suitably supported.

(iii) For other configurations, loads according to 27.5.1(a) are to be applied, and means of support determined in order to comply with the requirements of 27.5.2(a)(i). Brackets, where fitted, are to be of suitable thickness and length according to their height. Pipe thickness is not to be taken less than as required in 21.1.

(iv) For standard ventilators of 900 mm height closed by heads of not more than the tabulated projected area, pipe thicknesses and bracket heights are specified in Table II 27-3. Brackets, where required are to be as specified in 27.5.2(a)(ii).

(v) For ventilators of height greater than 900 mm, brackets or alternative means of support are to be fitted according to the requirements of 27.5.2(a)(i) above. Brackets, where fitted, whose thickness and length are to be suitable for their height. Pipe thickness is not to be taken less than as required in 21.1.

(vi) All component parts and connections of the air pipe or ventilator are to be capable of withstanding the loads defined in 27.5.1(a).

(vii) Rotating type mushroom ventilator heads are unsuitable for application in the areas defined in 27.2.

(b) Windlass mounts

(i) Tensile axial stresses in the individual bolts in each bolt group i are to be calculated. The horizontal forces F_{xi} and F_{yi} are normally to be reacted by shear chocks. Where "fitted" bolts are designed to support these shear forces in one or both directions, the von Mises equivalent stresses in the individual bolts are to be calculated, and compared to the stress under proof load. Where pourable resins are incorporated in the holding down arrangements, due account is to be taken in the calculations. The safety factor against bolt proof strength is to be not less than 2.0.

(ii) The stresses of above deck framing and hull structure supporting the windlass and its securing bolt loads are not to exceed the following values:

Bending stress: 85% of the yield strength of the material.
Shearing stress: 60% of the yield strength of the material.

Table II 27-2
760 mm Air Pipe Thickness and Bracket Standards

Nominal pipe diameter (mm)	Minimum fitted gross thickness, (mm)	Maximum projected area of head (cm^2)	Height(1) of brackets (mm)
40A(3)	6.0	-	520
50A(3)	6.0	-	520
65A	6.0	-	480
80A	6.3	-	460
100A	7.0	-	380
125A	7.8	-	300
150A	8.5	-	300
175A	8.5	-	300
200A	8.5(2)	1900	300(2)
250A	8.5(2)	2500	300(2)
300A	8.5(2)	3200	300(2)
350A	8.5(2)	3800	300(2)
400A	8.5(2)	4500	300(2)

(1) (see 27.5.2(a)(ii)) need not extend over the joint flange for the head.

(2) Brackets are required where the as fitted (gross) thickness is less than 10.5 mm, or where the tabulated projected head area is exceeded.

(3) Not permitted for new ships.

Note: For other air pipe heights, the relevant requirements of 27.5.2 are to be applied.

Table II 27-3
900 mm Ventilator Pipe Thickness and Bracket Standards

Nominal pipe diameter (mm)	Minimum fitted gross thickness, (mm)	Maximum projected area of head (cm^2)	Height of brackets (mm)
80A	6.3	-	460
100A	7.0	-	380
150A	8.5	-	300
200A	8.5	550	-
250A	8.5	880	-
300A	8.5	1200	-
350A	8.5	2000	-
400A	8.5	2700	-
450A	8.5	3300	-
500A	8.5	4000	-

Note: For other ventilator heights, the relevant requirements of 27.5.2 are to be applied.

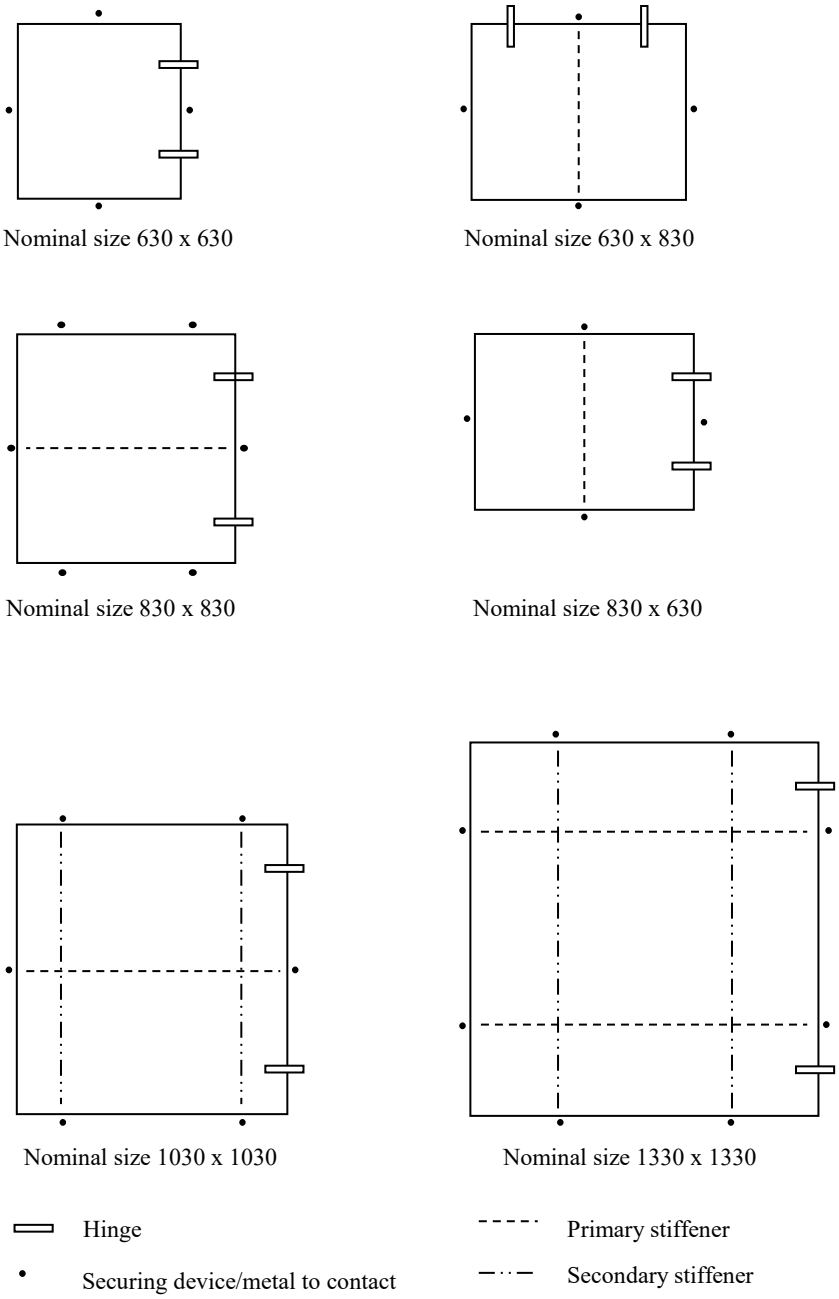

Fig. II 27-1
Arrangement of Stiffeners

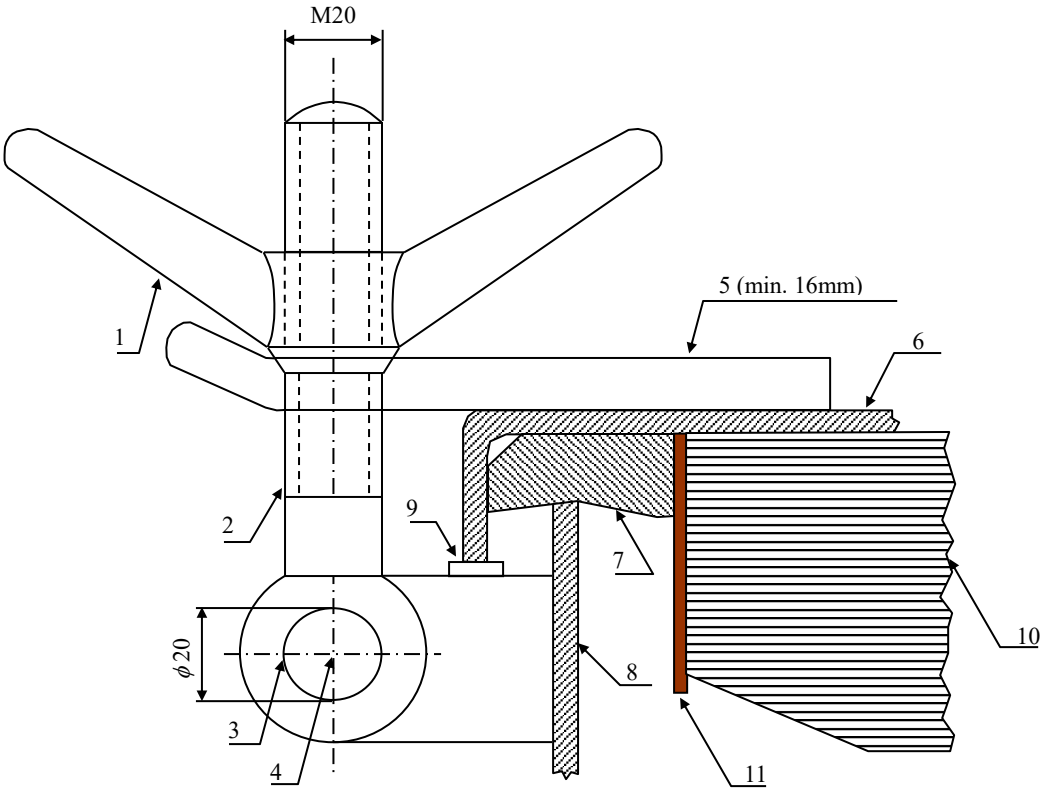

(Note: Dimensions in millimeters)

1: butterfly nut
2: bolt
3: pin
4: center of pin
5: fork (clamp) plate
6: hatch cover
7: gasket
8: hatch coaming
9: bearing pad welded on the bracket of a toggle bolt for metal to metal contact
10: stiffener
11: inner edge stiffener

Fig. II 27-2
Example of a Primary Securing Method

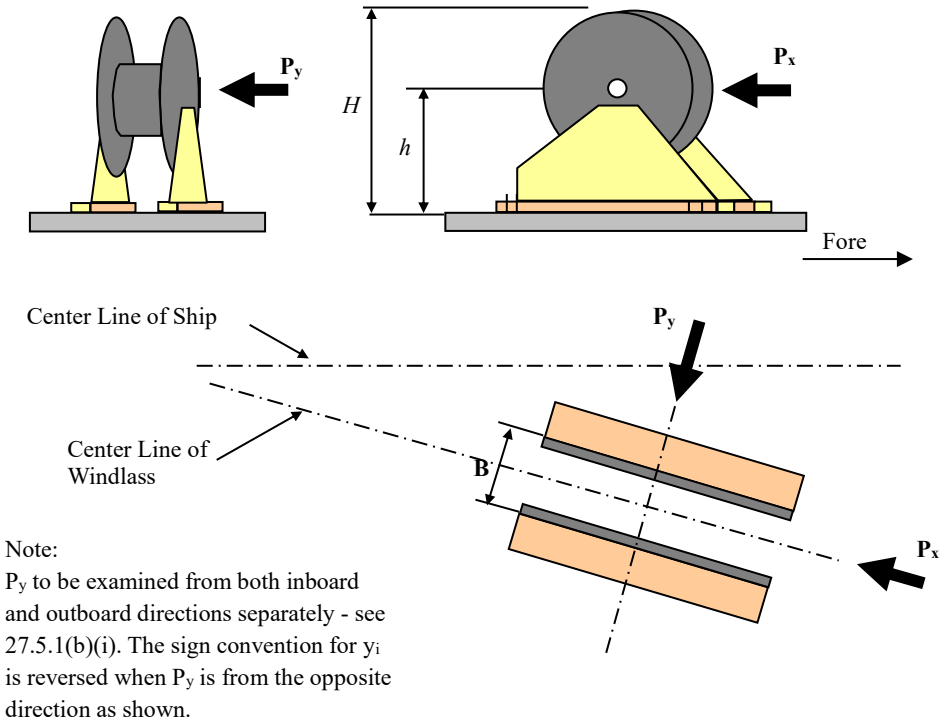

Fig. II 27-3
Direction of Forces and Weight

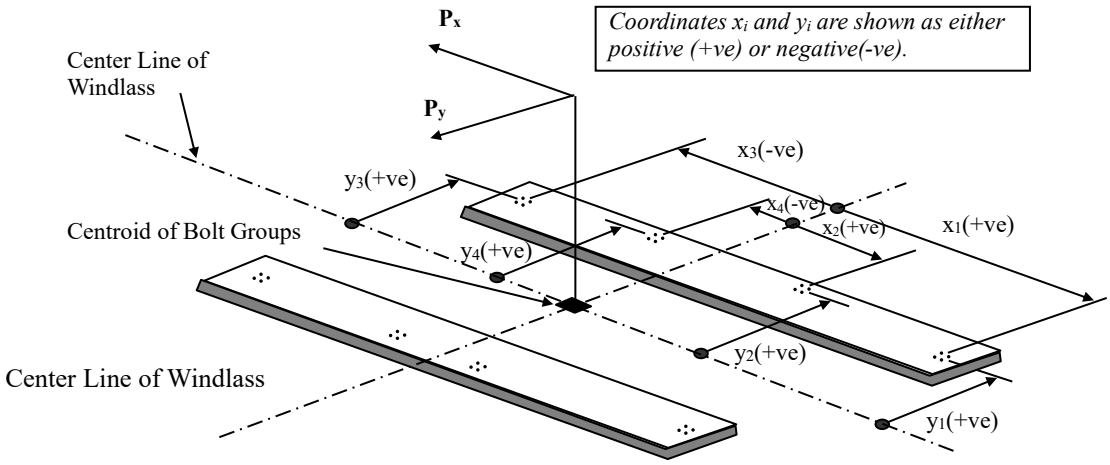

Fig. II 27-4
Sign Convention

Chapter 28

Means of Access

28.1 General Rules

28.1.1 General

(a) Peak tanks, deep tanks, cofferdams, cargo holds with relative high bilge hopper tanks and other similar enclosed spaces are to be provided with means of access, i.e., stages, ladders, steps or other similar facilities for internal examinations in safety. However, such means are not required in aft peak tanks and deep tanks which are exclusively loaded fuel oil or lubrication oil.

28.1.2 Means of Access to Spaces

(a) Safe access to peak tanks, deep tanks, cofferdams, cargo holds and other similar enclosed spaces is to be, in general, direct from the open deck and served by at least one access hatchway of manhole and ladder.

(b) Notwithstanding the above (a), safe access to lower spaces of spaces divided in vertically, may be from other spaces, subject to consideration of ventilation aspects.

(c) Notwithstanding the above (a), for each space of ships of less than 300 gross tonnage and space which is not greater than 1.5 m in height from the bottom to the top of the open deck, the provision of fixed ladders is not required.

28.1.3 Means of Access within Spaces

(a) Peak tanks, deep tanks, cofferdams, cargo holds and other similar enclosed spaces are to be provided with means of access to hull structures for examination.

(b) Where it is unavoidable to go over obstructions such as hull structural members of 600 mm or more in height for the access to hull structures within the space, appropriate facilities such as ladders, steps, etc. are to be fitted.

28.1.4 Specifications of Means of Access and Ladders

(a) Means of access are to ensure safety in use.

(b) Permanent means of access are to be of robust construction.

28.1.5 Plans for Means of Access

Plans showing arrangement for means of access to peak tanks, deep tanks, cofferdams, cargo holds with relative high bilge hopper tanks and other similar enclosed spaces are to be kept on board.

Chapter 29

Damage Control for Ships

29.1 Application

29.1.1 The requirements in this chapter are applied to the ships of 500 gross tonnage and over which are engaged in international voyage.

29.2 Damage Control

29.2.1 Watertight Doors

(a) Watertight doors in watertight bulkhead, except those permanently closed at sea, are to be provided with position indicators showing whether the doors are open or closed on the bridge and at all operating positions.

(b) Electrical installations for watertight doors specified in (a) except waterproof type approved by the Society are not to be provided with under freeboard deck.

29.2.2 Hold Ports and Other Similar Openings

For bow door, stern door or shell door required to be watertight, indicators which indicate whether the doors are opened or closed are to be provided on the navigation bridge. However, in case where it is to be deemed as appropriate by the Society, this requirement may be dispensed with.

29.3 Booklet and Plan for Damage Control

29.3.1 Booklet

(a) Booklet is to contain the information shown in the damage control plan.

(b) Booklet is to be provided at a suitable place which is made available to the officers of ships.

(c) The Booklet is recommended to be prepared in the working language of the ship. Where the language used in preparation of the Booklet is not English, a translation into English is to be included.

29.3.2 Damage Control Plan

(a) Damage control plan approved by the Society is to be permanently exhibited or readily available on the navigating bridge, for the guidance of the officer in charge of the ship.

(b) The damage control plan is to show clearly for the each deck and hold the boundaries of the watertight compartments, the openings therein with means of closure (including the position of any controls thereof), and the arrangements for the correction of any list due to flooding.

(c) The damage control plan is recommended to be prepared in the working language of the ship. Where the language used in preparation of the plan is not English, a translation into English is to be included.

29.3.3 Damage Stability Information

Ships subject to Chapter 30A of this Part are to be provided with damage stability information deemed appropriate by the Society.

Chapter 30

Intact Stability

30.1 Application

30.1.1 The requirements on intact stability (hereinafter referred to as "stability" in this chapter) in this chapter apply to ships which are 24 meters in length for freeboard and over. However, fishing ships, mobile offshore drilling units and dynamically supported craft may be excepted.

30.1.2 Special consideration may be given to the ships registered for a restricted service.

30.1.3 In case of the ships considered inadequate to be fully and/or directly applied the requirements in this chapter because of some special reasons (e.g. novel design features, unusual form of ships), stability will be individually determined by the Society.

30.1.4 "Down flooding angle" refers to the angle of heel at which openings in the hull, superstructures or deckhouses which cannot be closed weathertight immerse.

30.1.5 The Society may make special requirements as instructed by the flag governments of ships or the governments of the sovereign nations in which ships navigate.

30.2 Stability Information

30.2.1 Stability Information Booklet

Ships are to be provided with a stability information booklet approved by the Society, to ensure the enough stability of the ship under varying conditions of service. Such booklet is to include principal particulars regarding the ship's stability, the results of stability experiments and information as necessary by the master to verify the ship's stability.

30.2.2 Stability Computer

Where a computer for stability calculation is on board the ship as a supplement to the stability information booklet, such computer is to be approved by the Society. The computer is to be provided with an operation manual.

30.2.3 Draft Marks

Every ship is to have scales of drafts marked clearly at the bow and stern. In the case where the draft marks are not located where they are easily readable, or operational constraints for a particular trade make it difficult to read the draft marks, then the ship is also to be fitted with a reliable draft indicating system by which the bow and stern drafts can be determined.

30.3 Stability Requirement

30.3.1 Stability curves and heeling moment curves are to be prepared by the method deemed appropriate by the Society for all designed loading conditions and they are to be verified to comply with the requirements in 30.5 and 30.6.

30.3.2 Excessive stability is to be avoided, since it may produce a greater acceleration which may have adverse effects in hull structures, cargoes, etc.

30.3.3 For the ships navigating in the areas where icing is expected to occur, it is to be considered that the projected area against wind is increased and the position of centre of gravity is heightened due to icing on the structures.

30.3.4 In cases where anti-rolling devices are installed in a ship, the requirements given in 30.5 and 30.6 are to be satisfied when such devices are in operation and when there is either a failure of power supply to the devices or a failure of the devices.

30.3.5 Provisions are to be made for a safe margin of stability at all stages of the voyage, regard being given to additions of weight, such as those due to the absorption of water and icing as well as to losses of weight such as those due to the consumption of fuel and stores.

30.3.6 Curves or tables of minimum operational metacentric height (GM) or maximum centre of gravity (VCG) are to extend over the full range of operational trims.

30.4 Calculation on Stability

Stability is to be calculated under the following conditions:

30.4.1 In preparing stability curves, the position center of gravity is to be determined on the basis of the data obtained at inclining test required in 1.16 of Part I.

30.4.2 Free surface effects of liquid in tanks are to be of what the stability during navigation under the relevant design loading condition is most severely affected.

30.4.3 Where anti-rolling devices are installed in a ship, the requirements in 30.5 are to be satisfied whether the devices are in operation or not.

30.5 General Stability Criteria

30.5.1 For ships without timber deck cargoes, the stability curves are to comply with the following requirements in Fig. II 30-1.

(a) A_1 is not to be less than 0.055 m · rad.

(b) A_2 is not to be less than 0.03 m · rad.

(c) $(A_1 + A_2)$ is not to be less than 0.09 m · rad.

(d) GZ is to be at least 0.20 m at an angle of heel equal to or greater than 30°.

(e) θ_{max} is not to be less than 25°.

(f) G_0M is not to be less than 0.15 m.

30.6 Stability Criteria in Wind and Waves

30.6.1 Stability curves and wind-heeling moment lever curves of ships are to comply with the following requirements in Fig. II 30-2.

(a) Heeling angle caused by steady wind is to be less than 16° or an angle corresponding to 80% of immersing angle of deck edge, whichever is less.

(b) Area "b" is not to be less than area "a".

where:

l_{w1} = Heeling moment lever caused by steady wind (m) given by the following formula:

$= \frac{0.0514AZ}{W}$

A = Projected lateral area of hull and cargoes on deck above waterline (m^2).

Z = Vertical distance between the centre of "A" and the centre of underwater projected lateral area of hull (m). In general, the centre of underwater projected lateral area may be approximated to locate at half the draught.

W = Displacement (ton).

l_{w2} = Heeling moment lever caused by gust (m) given by the following formula:

$= 1.5l_{w1}$

a = Area encircled by stability curve, l_{w2} and θ_r (m · rad).

b = Area encircled by stability curve, l_{w2} and θ_2 (m · rad).

θ_r = Angle of rolling stop motion (degree). In general, it may be given by the formula $(\theta_0 - \theta_1)$.

θ_c = Heeling angle at the second intersection between heeling moment lever (l_{w2}) and stability curve (degree).

θ_2 = Heeling angle (degree) to be taken of whichever is the least, down flooding angle, θ_c or 50°.

θ_0 = Angle of heel under action of steady wind (degree).

θ_1 = Angle of roll to windward due to wave action (degree) given by the following formula :

$= 109x_1x_2k\sqrt{rs}$

x_1 = Values obtained from Table II 30-1 according to the value of B/d. In case the value of B/d becomes intermediate, values are to be determined by interpolation.

x_2 = Values obtained from Table II 30-2 according to the value of C_b. In case the value of $C_b$becomes intermediate, values are to be determined by interpolation.

C_b = Block coefficient given by the following formula :

$= \frac{W}{1.025LBd}$

L = Length of the ship at waterline (m)

k = Values determined as follows;

= 1.0 for round-bilged ships having neither bilge keels nor bar keels,

= 0.7 for ships with sharp bilges,

For ships with bilge keel and/or bar keels: Values obtained from Table II 30-3 according to the value of $\frac{100A_k}{LB}$.

In case $\frac{100A_k}{LB}$ becomes intermediate, values are to be determined by interpolation.

A_k = Total area of bilge keels, projected lateral area of bar keels or sum of those areas (m^2).

r = Values obtained from the following formula.

However, the value of r need not be taken over 1.0.

$= 0.73 + 0.6\frac{OG}{d}$

OG = Distance between the centre of gravity and the waterline (m), and is taken as positive when the centre of gravity is above waterline.

s = Values obtained from Table II 30-4 according to the value of T. In case T becomes intermediate, values are to be determined by interpolation.

T = Rolling period (seconds) obtained from the following formula,

$= \frac{2B}{\sqrt{G_0M}}\left(0.373 + 0.023\frac{B}{d} - 0.043\frac{L}{100}\right)$

G_0M = As specified in 30.5.

30.6.2 Where the requirements specified in 30.6.1 apply to the ships registered as restricted service, the values of l_{w1} and s may be modified by the Society.

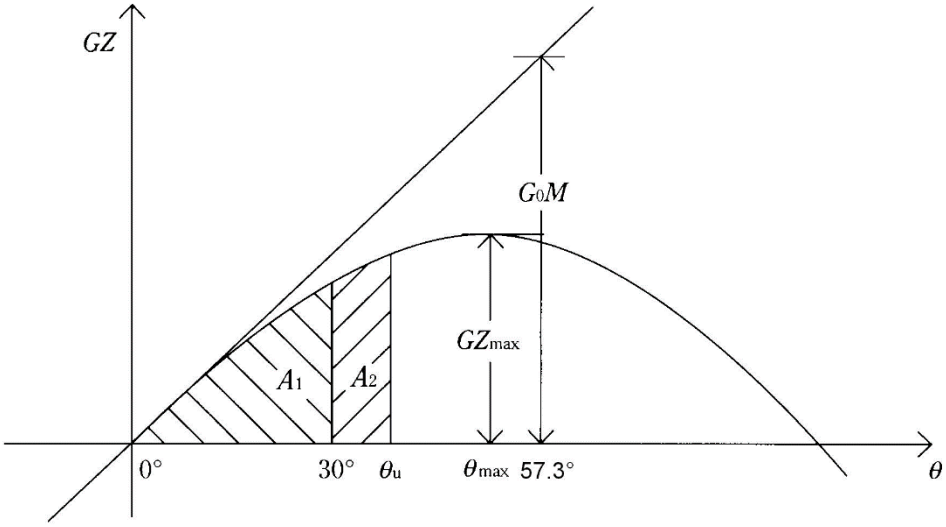

Fig. II 30-1
Stability Curve (General Stability Criteria)

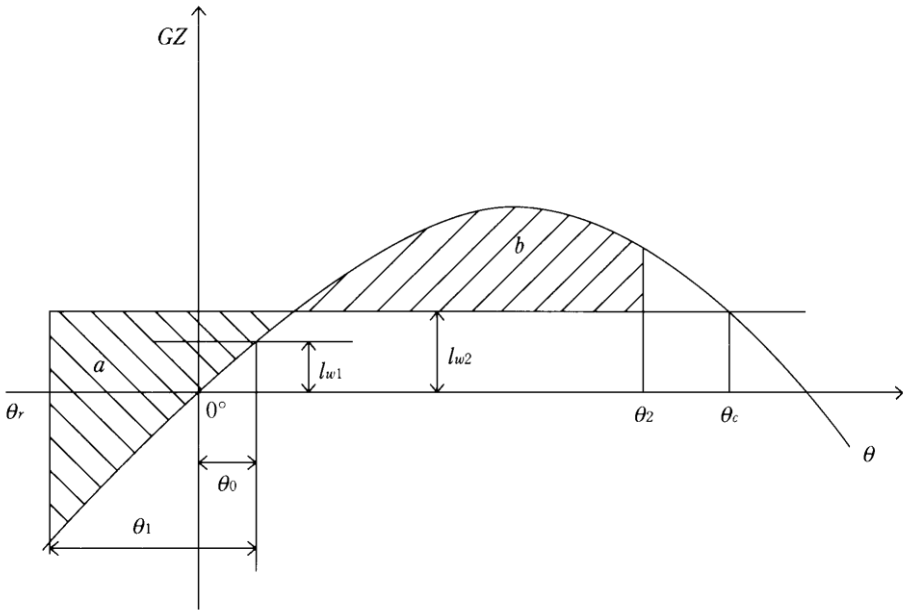

Fig. II 30-2
Stability and Wind-heeling Moment Lever Curve (Stability Criteria in Wind and Waves)

Table II 30-1
Value of x_1

B/d	≤ 2.4	2.5	2.6	2.7	2.8	2.9	3.0	3.1	3.2	3.3	3.4	≥ 3.5
x_1	1.0	0.98	0.96	0.95	0.93	0.91	0.90	0.88	0.86	0.84	0.82	0.80

Table II 30-2
Value of x_2

C_b	≤ 0.45	0.50	0.55	0.60	0.65	≥ 0.70
x_2	0.75	0.82	0.89	0.95	0.97	1.0

Table II 30-3
Value of k

$100A_k / (LB)$	0	1.0	1.5	2.0	2.5	3.0	3.5	≥ 4.0
k	1.0	0.98	0.95	0.88	0.79	0.74	0.72	0.70

Table II 30-4
Value of s

T	≤ 6	7	8	12	14	16	18	≥ 20
s	0.100	0.098	0.093	0.065	0.053	0.044	0.038	0.035

Chapter 30A

Subdivision and Damage Stability

30A.1 General

30A.1.1 Ships of applicable size, type and service are to have subdivision and damage stability as required by the SOLAS Regulation II-1/4 to 7-3.

Chapter 31
Ship Recycling

31.1 General

31.1.1 Application

The requirement in this chapter is applicable to new and existing ships for which the optional Ship Recycling notation **SRE** and/or **SRE-EU** has been requested. Obtaining this notation will assist in complying with regulation 5 of the Hong Kong International Convention for the Safe and Environmentally Sound Recycling of Ship, 2009 (SR/CONF/45) and/or Article 5 of EU 1257/2013. Furthermore, to achieve the goal of safe and environmentally sound recycling of ship, the ship recycling facility selected is to be the one authorized by the Competent Authority, taking into consideration the certification of ISO 30000 series standards.

31.1.2 Notation

Ships which have had the ship details and Part 1 of the Inventory of their "Statement on Inventory of Hazardous Materials" (hereinafter referred to as the Statement, refer to 31.2.1 of this chapter) prepared and certified to the requirements of this chapter to the satisfaction of the Surveyors to the Society will be eligible to receive the notation **SRE** and/or **SRE-EU** (Ship Recycling).

31.1.3 Definitions

(a) Inventory – an itemized listing, specifying the type, location and approximate quantity of hazardous materials used in the ship's construction and equipment.

(b) Hazardous Materials(Hazmat) – materials or substances that are known to have the potential to harm human health and/or the environment.

(c) New Ship – means a ship for which either:
   - (i) the building contract is placed on or after the date of application of this Hong Kong Convention / EU Regulation;
   - (ii) in the absence of a building contract, the keel is laid or the ship is at a similar stage of construction six months after the date of application of this Hong Kong Convention / EU Regulation or thereafter; or
   - (iii) the delivery takes place thirty months after the date of application of this Hong Kong Convention / EU Regulation or thereafter;

(d) Existing Ship – means a ship not complying with the above definition of a new ship.

(e) Shipowner – means the person or persons or company registered as the Owner of the ship or, in the absence of registration, the person or persons or company owning the ship. However, in the case of a ship owned by a State and operated by a company which in the State is registered as the ship's operator, "Owner" shall mean such company.

(f) Supplier – vendors which provide products, in support of the ship's construction and outfitting. This group includes equipment manufacturers and material providers.

(g) Threshold Level – is defined as the concentration value in homogeneous materials.

(h) Homogeneous Material – means a material of uniform composition throughout that cannot be mechanically dis-jointed into different materials, meaning that the materials cannot, in principle, be separated by mechanical action such as unscrewing, cutting, crushing, grinding, and abrasive processes.

31.2 Statement on Inventory of Hazardous Materials (the Statement)

The Statement for ships comply with Hong Kong Convention / EU Regulation is comprised of two components as follows.

(a) Ship Details

The first component of the Statement is referred to as the "Ship Details", and includes the following:

(i) Name of ship

(ii) Distinctive number or letters

(iii) Port of registry

(iv) Gross tonnage

(v) IMO number

(vi) Name and address of Shipowner

(vii) IMO registered Owner identification number

(viii) IMO company identification number

(ix) Date of construction

Refer to 31.5.5 of this chapter for an acceptable equivalent to the above.

(b) Inventory of Hazardous Materials (IHM)

The second component of the Statement is the actual inventory of the hazardous materials, containing the loca-tion, the approximate quantity/volume of each identified material on board the ship. This inventory is divided into the following parts.

(i) Part 1: Hazardous or potentially hazardous materials/substances utilized in the ship's structure and equip-ment/systems.

(ii) Part 2: Operationally generated waste

(iii) Part 3: Stores

Preparation of Part 1 is to be based on the listing of those materials/substances considered to be hazardous or potentially hazardous as found in Sections A and B of Table II 31-2. Refer to 31.3.3 and 31.4.2 of this chapter. Part 2 and Part 3 are to be prepared by the Shipowner prior to or during the final voyage to the recycling facility and are out-side the scope of the class notation.

Table II 31-5 of this chapter is a representative format for the inventory component of the Statement.

31.3 Requirement for New Ships

31.3.1 General

Throughout a ship's design and construction, designers and builders are to exercise environmental judgment in the selection of all materials and substances to be incorporated into the ship's structure and equipment.

31.3.2 Prohibited or Restricted Materials

Substances known to be hazardous which are prohibited or restricted by national regulation and various interna-tional agreements and conventions are not to be used in the construction. Examples of these substances and the cor-responding statutory instruments are detailed in Table II 31-1.

31.3.3 Part 1 of the Inventory of Hazardous Materials

Upon completion of the material selection process, Part 1 of the IHM is to be prepared by the shipbuilder. Where the substances listed in Sections A and B of Table II 31-2 have been added to the ship above the threshold levels specified in Table II 31-4, their identity, location and quantity are to be incorporated into Part 1 of the Inventory.

Documentation in the form of drawings or tables noting the use of hazardous materials, quantity, and location are to be submitted to the Society for review. At the ship builders option each drawing submitted is to be annotated in such a manner as to detail the use of hazardous or potentially hazardous materials thereon.

31.3.4 Vendor Supplied Equipment and Materials

Shipbuilders are to work closely with all their suppliers such that all equipment provided is environmentally safe or specifically itemized on the inventory. These suppliers are to confirm and declare whether or not the substances identified in Tables II 31-2 and 31-3 of this Chapter are present above the threshold level specified in Table II 31-4 of this Chapter, using the "supplier's declaration" approach established by the IMO Guidelines.

The approach consists of two declarations, as follows:

(a) Material Declaration (MD)

A declaration prepared by the suppliers, including the upstream suppliers in the equipment/system supply chain, detailing the specific substances including the system/item, the substance, and amount of substance. For detailed ex-planation and information requirements for the form, refer to MEPC.269(68) Section 6 and Appendix 3.

(b) Supplier's Declaration of Conformity (SDoC)

A declaration by the supplier to confirm conformity of the delivered product and related Material Declaration to the law and compliance with appropriate management/control requirements on the chemical substance contained in the product. Refer to MEPC.269(68) Section 7.

Shipbuilders are to request their suppliers to submit the above declaration forms for the products at the time of purchase. This collection of information, particularly the materials declarations, is to be used to prepare Part 1 of the Inventory.

31.4 Requirement for Existing Ships

31.4.1 General

Many materials and substances which were previously assumed to be non hazardous and selected for installation onboard ships, are no longer being utilized, or have since been identified as being hazardous. To assist in safeguarding the ship's crew, and workers involved in ship recycling, as well as the marine environment, documenting the location and approximate volume/quantity of materials currently classified as hazardous or potentially hazardous is to be achieved to the greatest degree possible.

It is recognized that it is often not possible to accurately define, identify, or locate specific hazardous or potentially hazardous materials onboard existing ships due to their concealment or unknown locations.

31.4.2 Part 1 of the Inventory of Hazardous Materials

Development of Part 1 of the IHM for an exiting ship is the responsibility of the Shipowner.

The development of the IHM is to be prepared in accordance with Regulation 5.2 of Hong Kong Convention and/or Article 5.2 of EU 1257/2013, taking into account the development guidelines given in MEPC.269(68) Section 4.2 and Appendix 5.

It is required to identify the prohibited materials listed in Section A of Table II 31-2 of this Chapter contained in the ship's structure and equipment, their identity, location, and approximate quantity in the Inventory. Hazardous materials listed in Section B of Table II 31-2 of this Chapter and contained in the ship's structure and equipment are to be identified as far as practical.

The determination of hazardous materials present onboard existing ships is, as far as practical, to be conducted as prescribed for new ships. Alternative procedure for hazardous materials determination through a visual/sampling check process as prescribed in MEPC.269(68) Section 4.2 can be applied. But this procedure is not to be used for any new installation resulting from the conversion or repair of existing ships after the initial preparation of the Inventory.

This alternative procedure consists of the following steps:

(a) Collection of Necessary Information (Step 1)

The information collection process is to be made taking into account the guidance in MEPC.269(68) Subsection 4.2.5 and Appendix 5 Section 2.

Often the ship's crew can provide assistance as to the location of hazardous or potentially hazardous materials onboard as a result of their in depth ship-specific knowledge developed from carrying out or witnessing repairs and maintenance. Additionally the crew may provide valuable information associated with equipment replacement or modifications. Thus, shipowners may want to consider interviewing the ship's crew for information.

(b) Assessment of Collected Information (Step 2)

The information collected in Step 1 is to be assessed with the purpose of determining the existence of hazardous materials in the ship's structure, equipment, and systems by classifying each item as "contained", "not contained", "unknown" or "potentially containing hazmat" and to work out a suitable scope of the hazmat investigation by visu-al/sampling checks. Guidance for this step can be found in MEPC.269(68) Subsection 4.2.6 and Appendix 5 Section 3. The assessment and investigation are to cover all materials listed in Section A of Table II 31-2 of this Chapter. The substances in Section B of Table II 31-2 of this Chapter are to be identified and listed as far as practical.

(c) Preparation of Visual/Sampling Check Plan (Step 3)

Based on the assessment results of the previous step, a detailed survey and sampling check plan is to be developed. The goal of the survey and sampling is to assist in confirming if hazardous or potentially hazardous materials are present and where they are located.

Specific guidelines on how to decide on when to apply visual check or sample check are given in MEPC.269(68) Subsection 4.2.7 and Appendix 5 section 4.

A copy of the visual/sampling check plan is to be submitted to the Society for review before conducting the on-board survey and sampling checks.

(d) Onboard Visual/Sampling Check (Step 4)

The onboard visual/sample check is to be carried out in accordance with the visual/sampling check plan. Guid-ance on the conduct of the visual survey and sampling checks is given in MEPC.269(68) Subsection 4.2.8 and Ap-pendix 5 Section 5.

When a sampling check is carried out, the sample is to be forwarded to a recognized laboratory for testing and the records of the sample taken, the sampling point marked on the ship plan, and the laboratory test results are to be retained for record and reference.

An external specialist having specific knowledge in the means of how to take material samples and preventative measures to be taken to avoid cross contamination may be retained by the shipowner.

(e) Preparation of Part 1 of the Inventory and related documentation (Step 5)

Development of Part 1 of the IHM for existing ships is to be made by the shipowner, based on results of the Owner's evaluation/analysis of available hazmat information, results of visual surveys and any hazmat/substance testing reports. For any equipment, system, and/or area that is classed as either "containing hazardous material" (CHM) or "potentially containing hazardous material" (PCHM), their identity and location together with the hazmat identity and approximate quantity are to be listed in Part 1 of the Inventory.

Any limitations regarding the scope of laboratory reports or prepared inventory are to be stated or noted in the "Remarks" column of the Inventory.

Development of a location diagram of the hazardous materials identified and listed in the inventory is recom-mended in order to help the ship's crew gain a visual understanding of the Inventory and the onboard auditing survey by an CR Surveyor.

Expert assistance is required for the performance of the procedural steps of collecting and assessing the necessary hazardous materials information, preparing a visual/sample check plan, and performing the visual

and sampling checks. The shipowner may consider employing a qualified and experienced hazardous material expert for the hazmat review and sampling, and contracting an accredited test laboratory for chemical analysis of samples.

31.4.3 New Installations

New installations containing hazardous materials listed in Section A of Table II 31-2 are prohibited, as for those containing hydrochloroflurorocarbons(HCFCs), which are permitted until January 1, 2020, except ships flying the flag of EU Member States or apply **SRE-EU** notation of the Society.

In relation to the IHM, any installation of materials and changes in ship structure and equipment resulting from the conversion or repair of existing ships after the initial approval are to be documented in a similar procedure as prescribed for new ships, based on MDs and SDoCs. Refer to 31.3.3 and 31.3.4 of this chapter for applicable requirements. The alternative procedure as prescribed in 31.4.2 above is not applicable for new installations.

Part 1 of the Inventory is to be properly updated reflecting the new installations containing hazardous materials listed in Table II 31-2 and relevant changes in ship's structure and equipment.

31.5 Certification, Maintenance and Survey

31.5.1 Introduction

The inventory of hazardous and potentially hazardous materials for ships of new constriction and existing ships, are to be developed by the shipyard or shipowner respectively, and submitted to the Society for review.

The hazardous or potentially hazardous materials/substances are to be suitably marked on board the ship to alert all parties of their presence and to facilitate random verification of the submitted documentation by an CR Surveyor.

31.5.2 Certification

Upon completion of the verification surveys, the Statement is issued and the **SRE** and/or **SRE-EU** notation is then assigned to the ship.

31.5.3 Survey

(a) Initial Survey

Once an inventory for a shipship has been developed, an onboard auditing survey by an CR Surveyor is to be carried out to generally verify that the locations and the approximate quantity/volume of hazardous material detailed on the inventory reflect those found on the shipship.

Upon successful completion of the initial survey, the Statement will be issued for a period not exceed five years.

(b) Annual Survey

An annual survey is also to be conducted to confirm that the Inventory reflects any modifications, repairs, or changes to the shipship that involve the removal or addition of hazardous materials.

Upon successful completion of the annual survey, the Statement will be endorsed.

(c) Renewal Survey

A renewal survey is to be carried out at intervals not exceeding five years. This survey is to verify that Part I of the IHM is properly maintained and updated to reflect changes in ship structure and equipment.

A new Statement is to be issued by the Society after successful completion of the renewal survey.

(d) Additional Survey

An additional survey, either general or partial, according to the circumstances, may be made at the request of the shipowner after a change, replacement, or significant repair of the structure, equipment, systems, fittings, arrangements and material. The survey is to ensure that any such change, replacement, or significant

repair has been made in the way that the ship continues to comply with the requirements of this chapter, and that Part I of the Inventory is amended as necessary.

Upon successful completion of the additional survey, the Statement will be endorsed.

31.5.4 Maintenance of the Statement

Part 1 of the IHM is to be maintained throughout the ship's life and placed on board the ship. The removal, re-placement, or repair of existing equipment or substances previously detailed in Part 1 or the addition of relevant new equipment or substances is to be carefully tracked and is to be specified in the Inventory and suitably marked on board. Any changes to Part 1 of the Inventory are to be recorded so as to provide the current information together with a history of the changes.

An annual verification survey is to be carried out in the course of completing other periodical surveys. Any changes to the materials in the IHM is to be noted by the ship's crew and verified by the attending Surveyor. Upon satisfactory review and verification, the Statement will be endorsed.

31.5.5 Retention of Statement

The Statement is to be retained on board the ship and is to be presented to each subsequent Owner, including those instances where the flag, or type of service changes. Any changes relating to the ship details are to be recorded and updated accordingly. The Continuous Synopsis Record, as detailed in SOLAS Reg. XI-1/5, when combined with the Certificate of Build, as produced by the ship builder are considered as equivalent to the ship details section of the Statement, provided a copy is attached to the Inventory.

Table II 31-1
List of Materials Prohibited or Restricted on New Ships or New Installation

Substances	Agreement/Convention
Asbestos	1974 SOLAS – 2009 Amendments (Reg. II-1/3-5)
Organotin Compounds which act as biocides in antifouling systems (tributyltins (TBT's), Triphenyltins (TET's) and tributyltins Oxide (TBTO's))	International Convention on the Control of Harmful Anti-Fouling Systems on Ships 2001
Ozone Depleting Substances, Chlorofluorocarbons (CFC's)	MARPOL Annex VI Reg. 12 & Montreal Protocol
Polychlorinated biphenyls (PCB's)	Stockholm Convention on Persistent Organic Pollutants (POP's) (Part II)
Perfluorooctane sulfonic acid (PFOS) and its derivatives *	EU 1257/2013
Brominated Flame Retardant (HBCDD) *	EU 1257/2013

* Only apply to ships flying the flag of EU Member States or apply **SRE-EU** notation of the Society.

Table II 31-2
List of Hazardous Wastes and Substances that are Relevant to Ship Recycling

No.	*Materials*		*Inventory*		
			Part 1	*Part 2*	*Part 3*
A. Obligatory for New and Existing Ships					
1	Asbestos		X		
2	Polychlorinated Biphenyls (PCBs)		X		
3	Ozone Depleting Substances	CFCs	X		
		Halons	X		
		Other fully halogenated CFCs	X		
		Carbon Tetrachloride	X		
		1,1,1-Trichloroethane (Methyl Chloroform)	X		
		Hydrochlorofluorocarbons	X		
		Hydrobromofluorocarbons	X		
		Methyl Bromide	X		
		Bromochloromethane	X		
4	Organotin Compounds	Tributyl Tins	X		
		Triphenyl Tins	X		
		Tributyl Tin Oxide (TBTO)	X		
5	Perfluorooctane sulfonic acid (PFOS) and its derivatives *		X		
B. Obligatory for New Ships and New Installations; Voluntary for Existing Ships					
1	Cadmium and Cadmium Compounds		X		
2	Hexavalent Chromium and Hexavalent Chromium Compounds		X		
3	Lead and Lead Compounds		X		
4	Mercury and Mercury Compounds		X		
5	Polybrominated Biphenyl (PBBs)		X		
6	Polybrominated Dephenyl Ethers (PBDEs)		X		
7	Polychloronaphthalanes (more than 3 chlorine atoms)		X		
8	Radioactive Substances		X		
9	Certain Shortchain Chlorinated Paraffins (Alkanes, C10-C13, chloro)		X		
10	Brominated Flame Retardant (HBCDD) *		X		
C. Regular Consumable Goods					
1	Household appliances	Refrigerators, Freezers, Microwaves, Toasters, Fryers, Coffee machines, Other appliances used for cooking including Cutlery, Pans, Chinaware, Cups and Glasses, Washing machines, Clothes dryers, Dish washing machines, Irons, Vacuum cleaners, hairdryers			X
2	IT and telecommunications equipment	Personal computers, Notebook computers, Typewriters, Printers, Copying equipment, Pocket and desk calculators, Facsimile, Telephones, Remote controls			X
3	Consumer equipment	Radio sets, Television sets, Video cameras, Video recorders, Musical instruments, Gambling Machines			X
4	Lighting equipment	Fluorescent lamps, Filament bulbs, lamps			X
5	Electrical and electronic tools	Drills, Saws, Sewing machines			X
6	Leisure and sports equipment	Video games, Karaoke machine, Sports equipment			X
7	Non ship-specific furniture, Interior and similar equipment	Chairs, Sofas, Tables, Beds, Curtains, Carpets, Garbage bins, Bedlinen, Pillows, Towels, Mattresses, Storage racks, Decoration, Bathroom installations, Toys, not structurally relevant or integrated artwork			X

* Only apply to ships flying the flag of EU Member States or apply **SRE-EU** notation of the Society.

Table II 31-3
Potentially Hazardous Materials which may be Onboard Ships Delivered to Recycling Facilities

No.	*Properties*		*Goods*	*Inventory*		
				Part 1	*Part 2*	*Part 3*
1	Liquid	Oiliness	Kerosene			X
2			White Spirit			X
3			Lubricating Oil			X
4			Hydraulic Oil			X
5			Anti-seize Compounds			X
6			Fuel Additives			X
7			Engine Coolant Additives			X
8			Antifreeze Fluids			X
9			Boiler and Feed Water Treatment and Test Re-agents			X
10			De-ionizer Regenerating Chemicals			X
11			Evaporator Dosing and Descaling Acids			X
12			Paint Stabilizers/Rust Stabilizers			X
13			Solvents/Thinners			X
14			Paints			X
15			Chemical Refrigerants			X
16			Battery Electrolyte			X
17			Alcohol, Methylated Spirits			X
18	Gas	Explosives/ Inflammables	Acetylene			X
19			Propane			X
20			Butane			X
21			Oxygen			X
22		Greenhouse Gases	CO_2			X
23			Perfluorocarbons (PFCs)			X
24			Methane			X
25			Hydrofluorocarbon (HFCs)			X
26			Nitrous Oxide (N_2O)			X
27			Sulfur Hexafluoride (SF_6)			X
28	Liquid	Oiliness	Bunkers: Fuel Oil			X
29			Grease			X
30			Waste Oil (Sludge)		X	
31			Bilge		X	
32			Oily Liquid Cargo Tank Residues		X	
33			Ballast Water		X	
34			Raw Sewage		X	
35			Treated Sewage		X	
36			Non-oily Liquid Cargo Residues		X	
37	Gas	Explosibility/ Inflammability	Fuel Gas			X

Table II 31-3
Potentially Hazardous Materials which may be Onboard Ships Delivered to Recycling Facilities (continued)

No.	*Properties*	*Goods*	*Inventory*		
			Part 1	*Part 2*	*Part 3*
38	Solid	Dry Cargo Residues		X	
39		Medical Waste/Infectious Waste		X	
40		Incinerator Ash(1)		X	
41		Garbage(1)		X	
42		Fuel Tank Residues		X	
43		Oily Solid Cargo Tank Residues		X	
44		Oily/Contaminated Rags		X	
45		Batteries (incl. Lead Acid Batteries)			X
46		Pesticides/Insecticide Sprays			X
47		Extinguishant			X
48		Chemical Cleaner (incl. Electrical Equipment Cleaner, Carbon Remover)			X
49		Detergent/Bleach (could be a liquid)			X
50		Miscellaneous Medicines			X
51		Fire Fighting Clothing, Equipment			X
52		Dry Tank Residues		X	
53		Cargo Residues		X	
54		Spare parts which contain materials listed in Table II 31-2: A or B			X

Note:

(1) Definition of "Garbage" is identical with that of MARPOL Annex V. However, "Incinerator Ash" is classified separately because it may include hazardous substances or heavy metals.

Table II 31-4
Threshold Levels of Chemical Substances to be Listed in the Inventory

No.	*Materials*		*Threshold Level*
A. Obligatory for New and Existing Ships			
1	Asbestos		0.1%(1)
2	Polychlorinated Biphenyls (PCBs)		50 mg/kg(2)
3	Ozone Depleting Substances	CFCs	No threshold level(3)
		Halons	
		Other fully halogenated CFCs	
		Carbon Tetrachloride	
		1,1,1-Trichloroethane (Methyl Chloroform)	
		Hydrochlorofluorocarbons	
		Hydrobromofluorocarbons	
		Methyl Bromide	
		Bromochloromethane	
4	Organotin Compounds	Tributyl Tins	2500 mg/kg(4)
		Triphenyl Tins	
		Tributyl Tin Oxide (TBTO)	
5	Perfluorooctane sulfonic acid (PFOS) and its derivatives(5)		10 mg/kg (0.001% m/m)(6)
B. Obligatory for New Ships and New Installations; Voluntary for Existing Ships			
1	Cadmium and Cadmium Compounds		100 mg/kg(7)
2	Hexavalent Chromium and Hexavalent Chromium Compounds		1000 mg/kg(7)
3	Lead and Lead Compounds		1000 mg/kg(7)
4	Mercury and Mercury Compounds		1000 mg/kg(7)
5	Polybrominated Biphenyl (PBBs)		50 mg/kg(8)
6	Polybrominated Dephenyl Ethers (PBDEs)		1000 mg/kg(7)
7	Polychloronaphthalanes (more than 3 chlorine atoms)		50 mg/kg(9)
8	Radioactive Substances		No threshold level(10)
9	Certain Shortchain Chlorinated Paraffins (Alkanes, C10-C13, chloro)		1%(11)
10	Brominated Flame Retardant (HBCDD)(5)		100 mg/kg

Note:

(1) In accordance with regulation 4 of the Convention, for all ships, new installation of materials which contain asbestos are to be prohibited. According to the UN recommendation "Globally Harmonized System of Classification and Labelling of Chemicals (GHS)" adopted by the United Nations Economic and Social Council's Sub-Committee of Experts on the Globally Harmonized System of Classification and Labelling of Chemicals (UNSCEGHS), the UN's Sub-Committee of Experts, in 2002 (published in 2003), carcinogenic mixtures classified as Category 1A (including asbestos mixtures) under the GHS are required to be labelled as carcinogenic if the ratio is more than 0.1%. However, if 1% is applied, this threshold value should be recorded in the Inventory and, if available, the Material Declaration and can be applied not later than five years after the entry into force of the Convention. The threshold value of 0.1% need not be retroactively applied to those Inventories and Material Declarations.

(2) In accordance with regulation 4 of the Convention, for all ships, new installation of materials which contain PCBs are to be prohibited. The Organization set 50 mg/kg as the threshold value referring to the concentration level at which wastes, substances and articles containing, consisting of or contaminated with PCB are characterized as hazardous under the Basel Convention.

(3) "No threshold value" is in accordance with the Montreal Protocol for reporting ODS. Unintentional trace contaminants should not be listed in the Material Declarations and in the Inventory.

(4) This threshold value is based on the Guidelines for brief sampling of anti-fouling systems on ships (resolution MEPC.104(49)).

(5) Only apply to ships flying the flag of EU Member States or ships assigned **SRE-EU** notation by the Soecity.

(6) Concentrations of PFOS above 10 mg/kg (0.001% by weight) when it occurs in substances or in preparations or concentrations of PFOS in semi-finished products or articles, or parts thereof equal to or above than 0.1% by weight calculated with reference to the mass of structurally or micro-structurally distinct parts that contain PFOS or for textiles or other coated materials, if the amount of PFOS is equal to or above than 1 μg/m² of the coated material.

(7) The Organization set this as the threshold value referring to the Restriction of Hazardous Substances (RoHS Directive 2011/65/EU, Annex II).

(8) The Organization set 50 mg/kg as the threshold value referring to the concentration level at which wastes, substances and articles containing, consisting of or contaminated with PBB are characterized as hazardous under the Basel Convention.

(9) The Organization set 50 mg/kg as the threshold value referring to the concentration level at which wastes, substances and articles containing, consisting of or contaminated with PCN are characterized as hazardous under the Basel Convention.

(10) All radioactive sources should be included in the Material Declaration and in the Inventory. Radioactive source means radioactive material permanently sealed in a capsule or closely bonded and in a solid form that is used as a source of radiation. This includes consumer products and industrial gauges with radioactive materials. Examples are listed in MEPC.269(68) appendix 10.

(11) The Organization set 1% as the threshold value referring to the EU legislation that restricts Chlorinated Paraffins from being placed on the market for use as substances or as constituents of other substances or preparations in concentrations higher than 1% (EU Regulation 1907/2006, Annex XVII Entry 42 and Regulation 519/2012).

Table II 31-5
Standard Format of the Inventory of Hazardous Materials

Part 1 Hazardous materials contained in the ship's structure and equipment

1.1 Paints and coating systems containing materials listed in A and B of Table II 31-2

No.	*Application of Paint*	*Name of Paint*	*Location*	*Materials*	*Approx. Quantity*	*Remarks*
1	Anti-drumming compound	Primer, xx Co., xx Primer #300	Hull part	Lead	30 kg	
2	Antifouling	xx Co. xx coat #100	Underwater parts	TBT	20 kg	

1.2 Equipment and machinery containing materials listed in A and B of Table II 31-2

No.	*Name of Equipment and Machinery*	*Location*	*Materials*	*Parts of Use*	*Approx. Quantity*	*Remarks*
1	Switchboard	Engine Control Room	Lead	Solder and electric contact	200 mg	
			Mercury	Heat gauge	10 mg	
~~2~~	~~Diesel Engine, xx Co., xx #150~~	~~Engine Room~~	~~Lead Cadmium~~	~~Bearing Starter for blower~~	~~50 mg~~	
3	Diesel Engine, xx Co., xx #200	Engine Room	Lead	Starter for blower	10 mg	Revised by XXX on Oct. XX, 2008 (revoking No. 2)
4	Diesel generator (x 3)	Engine Room	Lead	Ingredient of copper compounds	0.01 kg	
5	Radioactive level gauge	No. 1 Cargo tank	Radioactive substances	Gauge	5 Ci (1.8E+11) (Bq)	Radionuclides: ^{60}Co

1.3 Structure and hull containing materials listed in A and B of Table II 31-2

No.	*Name of Structural Element*	*Location*	*Materials*	*Parts of Use*	*Approx. Quantity*	*Remarks*
1	Wall Panel	Accommodation	Asbestos	Insulation	2 t	
2	Wall Insulation	Engine Control Room	Lead	Perforated plate	200 mg	Cover of insulation material
			Asbestos	Fire protection	25 kg	Under lead containing plates

Part 2 Operationally generated waste

No.	*Location*(1)	*Name of Item and Detail (if any) of the Item*	*Approx. Quantity*	*Remarks*
1	Garbage Locker	Garbage (FOOD Waste)	30 kg	
2	Bilge Tank	Bilge Water	10 m^3	
3	No. 1 Cargo Hold	Dry Cargo Residues (Iron ore)	100 kg	
4	No. 2 Cargo Hold	Waste Oil (Sludge) (Crude)	100 kg	
5	No. 1 Ballast Tank	Ballast Water	100 m^3	
		Sediments	200 kg	

Table II 31-5
Standard Format of the Inventory of Hazardous Materials (continued)

Part 3 Stores						
3.1 Stores						
No.	***Location(1)***	***Name of Item***	***Unit Quantity***	***Figure***	***Approx. Quantity***	***Remarks(2)***
1	No. 1 Fuel Oil Tank	Fuel Oil (Heavy Fuel Oil)	---	---	100 m^3	
2	CO_2 Room	CO_2	100 kg	50 pcs	5000 kg	
3	Workshop	Propane	20 kg	10 pcs	200 kg	
4	Medicine Locker	Miscellaneous Medicines	---	---	---	Details are shown in the attached list
5	Paint Stores	Paint, xx Co., #600	20 kg	5 pcs	100 kg	Cadmium containing
3.2 Liquids sealed in ship's machinery and equipment						
No.	***Type of Liquids***	***Name of Machinery or Equipment***	***Location(1)***		***Approx. Quantity***	***Remarks***
1	Hydraulic Oil	Deck crane hydraulic oil system	Upper Deck		100 ltr	
		Deck machinery hydraulic oil system	Upper Deck and Bosun Store		2000 ltr	
		Steering gear hydraulic oil system	Steering Gear Room		500 ltr	
2	Lubricating Oil	Main engine system	Engine Room		50 ltr	
3	Boiler Water Treatment	Boiler	Engine Room		10 ltr	
3.3 Gases sealed in ship's machinery and equipment						
No.	***Type of Gases***	***Name of Machinery or Equipment***	***Location***		***Approx. Quantity***	***Remarks***
1	HFC	AC system	AC Room		100 kg	
		Refrigerated provision chamber machine	AC Room		50 kg	
3.4 Regular consumable goods						
No.	***Location(1)***	***Name of Item***	***Manufacturer***		***Quantity***	***Remarks***
1	Accommodation	Refrigerators	xx Co.		1	
2	Accommodation	Personal computers	xxx Co.		2	
3	Accommodation	Vacuum cleaners	xxxx Co.		1	
4	Accommodation	Office chairs	xxxxx Co.		1	

Notes:

(1) About Locations of Part 2 and Part 3, each item should be entered in order based on its location from a lower level to an upper level and from a fore part to an aft part for respective subparts. The location of Part 1 items is recommended to be described similarly, as far as practicable.

(2) About Remarks of Part 3, if hazardous materials are integrated in products, the approximate amount of the contents should be shown as far as possible.

Chapter 32

Pollution Prevention Notations For ShipShips

32.1 General

32.1.1 Application

Additional class notations **PP** ,**BWM** and **EEDI** may be assigned to ships so designed and equipped as to control and limit the emission of polluting substances in the sea and the air, in accordance with the requirements given in this chapter.

32.1.2 Certificates

The certificates to be submitted prior to the delivery of the additional class notations **PP** ,**BWM** and **EEDI** are listed in Table II 32-1.

32.2 PP Notation

32.2.1 Control of discharges into the sea

This section addresses requirements aimed towards the prevention of pollution to the sea environment discharged from shipships.

(a) Oil discharges

This subsection aimed at reducing the potential adverse effects on the sea environment by oil discharges from shipships.

(i) Machinery spaces

ShipShips are to hold and maintain a valid IOPP Certificate with Form A in accordance with the requirements of MARPOL Annex I, Regulations for the Prevention of Pollution by Oil.

(ii) Cargo area

ShipShips designed or adapted to carry a cargo of oil and/or oil product in bulk are to hold and maintain a valid IOPP Certificate with Form B in accordance with the requirements of MARPOL Annex I.

(b) Noxious liquid substances

This subsection aimed towards the prevention of pollution to the sea environment by noxious liquid substances (NLS) from shipships.

ShipShips designed or adapted to carry a cargo of NLS in bulk are to hold and maintain a valid NLS Certificate in accordance with the requirements of MARPOL Annex II, Regulations for the Control of Pollution by Noxious Liquid Substances in Bulk.

(c) Sewage

This subsection aimed at reducing the potential adverse effects on the sea environment by sewage from ships.

Ships are to comply with the requirements of MARPOL Annex IV, Regulations for the Prevention of Pollution by Sewage from Ships.

(d) Garbage

This subsection aimed towards the prevention of pollution to the sea environment by garbage discharges from ships.

Ships are to comply with the requirements of MARPOL Annex V, Regulations for the Prevention of Pollution by Garbage from Ships.

(e) Anti-fouling systems

This subsection aimed at reducing the potential adverse effects of introducing organotin compounds to the sea environment by anti-fouling systems of ships. Ships of 400 gross tons and above are to hold and maintain a valid IAFS Certificate in accordance with the requirements of the AFS Convention. Ships of 24 meters or more in length, but less than 400 gross tons, are to hold and maintain a valid Declaration on Anti-Fouling System in accordance with the requirements of the AFS Convention.

32.2.2 Control of discharges into the Air

This section addresses requirements aimed towards the prevention of pollution to the air environment discharged from ships.

(a) Nitrogen Oxides (NOx) emission

This subsection aimed towards the prevention of pollution to the air environment by nitrogen oxides from ships.

Ships are to comply with the requirements of Regulation 13 of MARPOL Annex VI, Regulations for the Prevention of Air Pollution from Ships, and the NOx Technical Code, 2008.

(b) Sulfur Oxides (SOx) emission

This subsection aimed towards the prevention of pollution to the air environment by sulfur oxides from ships.

Ships are to comply with the requirements of Regulation 14 and 18 of MARPOL Annex VI.

(c) Incinerators

This subsection aimed towards the prevention of pollution to the air environment from ships by incinerators.

Where installed onboard, incinerators are to be type-approved in accordance with IMO Resolution MEPC.244(66), Standard Specification for Shipboard Incinerators.

Onboard incineration is to conform to Regulation 16 of MARPOL Annex VI.

Incineration of any garbage, as defined by Annex V, excluding those contain more than traces of heavy metals, is to be recorded in the Garbage Record Book in accordance with MARPOL Annex V.

(d) Ozone depleting substances (ODS)

This subsection aimed towards the prevention of pollution to the air environment by ozone depleting substances from ships.

Ships are to comply with the requirements of Regulation 12 of MARPOL Annex VI.

(i) Refrigerant Systems

The requirements of this subsection are applicable to refrigerant systems onboard ships, excluding permanently sealed equipment, where there are no refrigerant charging connections or potentially removable components containing ozone depleting substances. Refrigerant systems are to be provided with environmentally friendly refrigerants in accordance with the requirements of Regulation 12 of MARPOL Annex VI. Furthermore, the use of refrigerants with global warming potential (GWP) greater than 3000 are prohibited. Annual refrigerant leakage is to be not more than 10% of the total refrigerant charge of each system. An appropriate leak detection system is to be provided to continuously monitor spaces into which the refrigerant could leak. Further, an alarm is to be given in a manned location when the refrigerant concentration exceeds a predetermined limit (for example, 25 ppm for ammonia or 300 ppm for halogenated fluorocarbons).

(ii) Fire-fighting Systems

This subsection addresses requirements aimed at reducing the potential adverse effects on the air environment by fire-fighting systems onboard ships. The use of Halons or perfluorocarbon mediums is not permitted in fixed fire extinguishing systems or portable fire extinguishers. Alternative mediums to Halons or perfluorocarbons may be acceptable, provided they contain no ozone depleting substances or have a GWP less than 4000.

32.3 BWM Notation

This subsection aimed towards the prevention of transporting harmful aquatic organisms and pathogens via water ballast from ships. Ships are to comply with the relevant requirements of International Convention for the Control and Management of Ships Ballast Water and Sediments, 2004.

32.4 EEDI and SEEMP Notations

This subsection aimed towards the prevention of pollution to the air environment by excessive carbon dioxide from ships. Ships are to comply with the requirements of Regulation 19 to 22 of MARPOL Annex VI.

Table II 32-1
Required Certificates

Certificates	**In accordance with:**	**PP ,BWM, EEDI and SEEMP notations**
IOPP certificate	Annex I of MARPOL 73/78	R
Certificates of type approval for: •15 ppm bilge separator •15 ppm bilge alarm	IMO Resolution MEPC.107(49): •Appendix 1 •Appendix 2	 R R
NLS certificate	Annex II of MARPOL 73/78	R, where applicable
ISPP certificate	Annex IV of MARPOL 73/78	R
Type approval certificate of the sewage system	IMO Resolution MEPC.227(64)	R
Incinerator type approval certificate	IMO Resolution MEPC.244(66) as amended by resolution MEPC.93(45) Annex VI of MARPOL 73/78	R(1)
IAPP certificate	Annex VI of MARPOL 73/78	R
EIAPP certificate	NOx Technical Code, 2008	R
IAFS certificate or Declaration on AFS	International Convention on the control of harmful anti-fouling systems on ships, 2001	R
International Energy Efficiency (IEE) Certificate	Annex VI of MARPOL 73/78	R
BWM certificate	International Convention for the Control and Management of Ships Ballast Water and Sediments, 2004	R

Note:
"R" means that a certificate is required.
(1) Shipboard incinerator is not required. However, when fitted onboard, it is to be type-approved.

Chapter 33
Sloshing

33.1 General

33.1.1 This Chapter applies to all liquid cargo, ballast tanks and other tanks with volume exceeding 100 m^3.

33.1.2 The sections 33.2 to 33.5 in this Chapter apply to steel hull structures for ships with length 100 meters and above. The section 33.6 applies to steel hull structures for ships with length less than 100 meters.

33.1.3 Sloshing is the phenomenon occurring in the partially filled tank due to liquid motion in the tank. The phenomenon may cause impulsive local load and cause critical damage on tank structure.

33.2 Design Loads for Sloshing

33.2.1 The sloshing pressures given in 33.2.2, 33.2.3 and 33.2.6 are to be considered together with the general structural strength formulae given in 33.3, 33.4 and 33.5. The impact pressures p_i given in 33.2.4 to 33.2.7 are to be used together with impact structural strength formulae given in 33.5.6.

33.2.2 General

(a) Tanks for crude oil or bunkers are normally to be designed for liquids of density equal to that of sea water, taken as $\rho = 1.025$ t/m^3. Tanks for heavier liquids may be approved after special consideration.

(b) The minimum sloshing pressure on web frames and girder panels in cargo and ballast tanks, except ballast tanks in double side and double bottom, is to be taken as 20 kN/m^2. In double side and double bottom ballast tanks, the minimum sloshing pressure is to be taken as 12 kN/m^2. In long or wide tanks with many web frames or girders, the sloshing pressure on the frames or girders located within $0.25l_s$ ($0.25b_s$) from the wash or end bulkheads is to be taken as:

$$p = p_{bhd-lng}\left(1 - \frac{s}{l_s}\right)^2 \quad \mathrm{kN/m^2} \quad \text{for web frames}$$

$$p = p_{bhd-t}\left(1 - \frac{s}{b_s}\right)^2 \quad \mathrm{kN/m^2} \quad \text{for longitudinal girders}$$

where:

$p_{bhd-lng}, p_{bhd-t}$	=	Longitudinal and transverse sloshing pressure on wash or end bulkheads as given in 33.2.3
s	=	Distance, in m, from bulkhead to web frame or girder considered.
l_s	=	As given in 33.2.3.
b_s	=	As given in 33.2.3.

(c) Tanks with free sloshing breadth $b_s > 0.56B$ will be subject to specified restrictions on maximum GM. In addition such tanks and/or tanks with a sloshing length such that $0.13L < l_s < 0.16L$ may be designed for specified restrictions in filling height. where b_s and l_s are as given in 33.2.3.

33.2.3 Sloshing pressure on bulkheads

The sloshing pressure in way of transverse bulkheads including wash bulkheads due to longitudinal liquid motion, $p_{bhd-lng}$, in kN/m^2, for a particular filling level, is to be taken as: (including top of tank located within $0.25l_s$ from the wash or end bulkheads) (see Fig. II 33-3)

$$p_{bhd-lng} = \rho g_0 l_s k_f \left[0.4 - \left(0.39 - \frac{1.7 l_s}{L}\right)\frac{L}{350}\right] \qquad kN/m^2$$

The sloshing pressure in way of longitudinal bulkheads including wash bulkheads due to transverse liquid motion, p_{bhd-t}, in kN/m^2, for a particular filling level, is to be taken as: (including top of tank located within $0.25b_s$ from the wash or end bulkheads) (see Fig. II 33-3)

$$p_{bhd-t} = 7\rho g_0 k_f \left(\frac{b_s}{B} - 0.3\right) GM^{0.75} \qquad kN/m^2$$

where:

g_0	=	9.81 m/s^2, standard acceleration of gravity
k_f	=	$1 - 2\left(0.7 - \frac{h}{H}\right)^2$, maximum $= 1$, and $\left(\frac{h}{H}\right)_{max} = 1$
h	=	Filling height, in m
H	=	Tank height. in m, within 0.15 l_s or 0.15 b_s
GM	=	Maximum GM including correction for free surface effect. $GM_{minimum}$ = 0.12 B (m)
l_s	=	Effective sloshing length, in m, given as:
	=	$\frac{(1+n_t\alpha_t)(1+\beta_t n_2)l}{(1+n_t)(1+n_2)}$ for end bulkheads
	=	$\frac{[1+\alpha_t(n_t-1)](1+\beta_t n_2)l}{(1+n_t)(1+n_2)}$ for wash bulkheads
b_s	=	Effective sloshing breadth, in m, given as:
	=	$\frac{(1+n_1\alpha_1)(1+\beta_1 n_4)b}{(1+n_1)(1+n_4)}$ for tank sides
	=	$\frac{[1+\alpha_1(n_1-1)](1+\beta_1 n_4)b}{(1+n_1)(1+n_4)}$ for wash bulkhead
l	=	Tank length, in m
b	=	Tank breadth, in m
n_t	=	Number of transverse wash bulkheads in the tank with $\alpha_t < 0.5$
α_t	=	Ratio between openings in transverse wash bulkhead and total transverse area in the tank below considered filling height, see Fig. II 33-1. If no restriction to filling height, h is taken as 0.7 H.

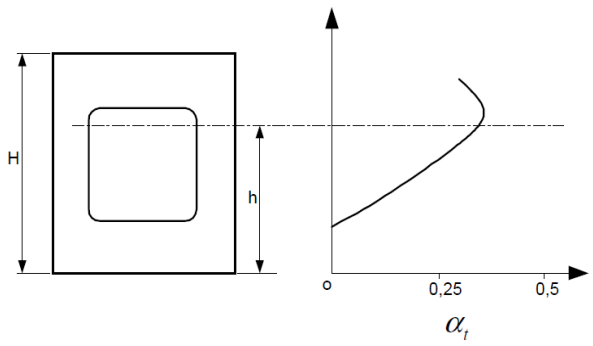

Fig. II 33-1
Wash Bulkhead Coefficient

n_2	=	$\frac{l}{1+n_t}$, number of transverse web-ring frames in the tank over the length.
β_t	=	Ratio between openings in web-ring frames and total transverse area in the tank below considered filling height, see Fig. II 33-2. If no restriction to filling height, h is taken as 0.7 H.
n_l	=	Number of longitudinal wash bulkheads in the tank with $\alpha_l < 0.5$
α_l	=	Similar to α_t but taken for longitudinal wash bulkhead.
n_4	=	$\frac{b}{1+n_l}$, number of longitudinal ring-girders in the tank between the breadth.
β_l	=	Similar to β_t taken for longitudinal ring-girders.

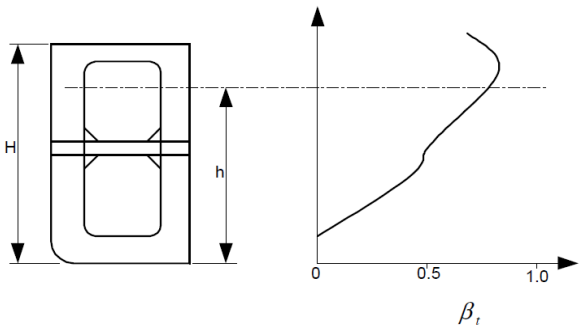

Fig. II 33-2
Webframe Coefficient

33.2.4 Impact pressure in upper part of tanks

Tanks with free sloshing length $0.13L < l_s < 0.16L$ or with free sloshing breadth $b_s > 0.56B$ will generate an impact pressure on horizontal and inclined surfaces adjacent to vertical surfaces in upper part of the tank due to high liquid velocities meeting these surfaces. For horizontal or inclined panels (deck, horizontal stringers etc.), the impact pressure on upper parts of the tank may be taken as:

Within $0.15l_s$ from transverse wash or end bulkheads:

$$p_i = \rho g_0 k_f \left(\frac{220 l_s}{L} - 7.5\right) \sin^2\gamma \qquad \text{kN/m}^2 \qquad \text{for } \frac{l_s}{L} \le \frac{350+L}{3550}$$

$$p_i = \rho g_0 k_f \left(25 + \frac{L}{13}\right)\left(0.5 + \frac{l_s}{L}\right) \sin^2\gamma \qquad \text{kN/m}^2 \qquad \text{for } \frac{l_s}{L} > \frac{350+L}{3550}$$

Within 0.15 b_s from longitudinal wash bulkheads and tank sides:

$$p_i = \frac{240 \rho g_0 k_f}{B}\left(\frac{b_s}{B} - 0.3\right) GM^{1.5} \sin^2\gamma \qquad \text{kN/m}^2$$

Outside $0.15l_s$ and $0.15b_s$ the pressure may be reduced to zero at $0.3l_s$ and $0.3b_s$, respectively, see Fig. II 33-3. In tank corners within 0.15 l_s and 0.15 b_s the impact pressure is not to be taken smaller than p_i (transversely) or p_i (longitudinally) + 0.4 p_i (transversely).

The reflected impact pressure on vertical surfaces adjacent to horizontal or inclined surfaces above will have an impact pressure linearly reduced to 50% of the pressure above, 0.1 l_s or 0.1 b_s (m) below. l_s, b_s and GM are as given in 33.2.3.

k_f	=	$1 - 4\left(0.6 - \frac{h}{H}\right)^2$, maximum = 1, and $\left(\frac{h}{H}\right)_{max} = 1$
h	=	Maximum allowable filling height, in m
H	=	Tank height, in m, within 0.15 l_s or 0.15 b_s
γ	=	Angle between considered panel and the vertical.

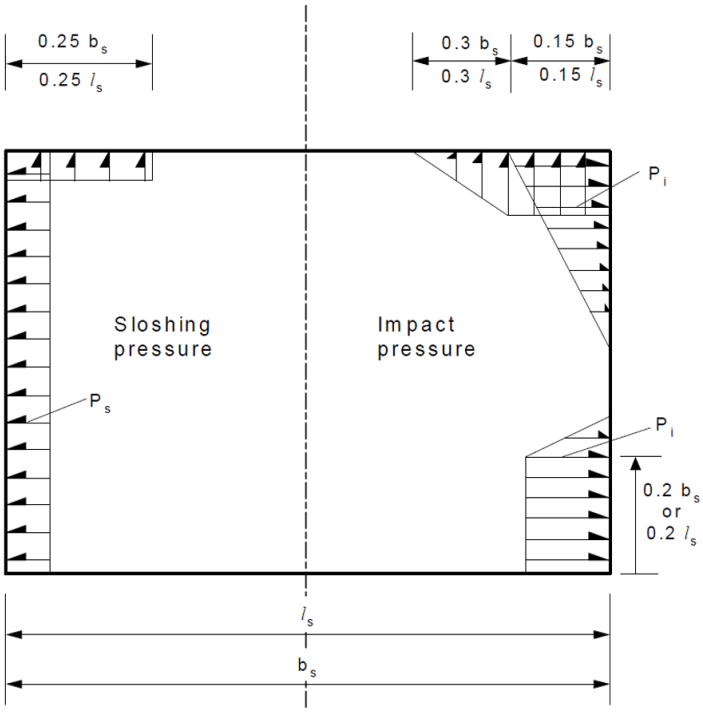

Fig. II 33-3
Pressure Distribution

33.2.5 Impact pressure in lower part of smooth tanks

In larger tanks (l_s > 0.13 L or b_s > 0.56 B) with double bottom and which have no internal transverse or longitudinal girders restraining the liquid movement at low minimum filling heights (2 < h < 0.2 l_s or 2 < h < 0.2 b_s) the impact pressure on vertical and inclined tank surfaces is not to be taken less than:

$p_i = 1.42\rho g_0 k l_s \sin^2\delta$ kN/m² on transverse bulkheads up to a height of $0.2 l_s$
$p_i = 1.5\rho g_0 b_s \sin^2\delta$ kN/m² on longitudinal bulkheads up to a height of $0.2 b_s$

The impact pressure may be reduced to zero 1 meter above the heights given, see Fig. II 33-3.

In tank corners at outermost side of transverse bulkheads the impact pressure within 0.15 b_s is not to be taken smaller than:

$p_i(\text{longitudinally}) + 0.4 p_i(\text{transversely})$

If the tank is arranged with a horizontal stringer within the height h < 0.2 l_s or h < 0.2 b_s a reflected impact pressure of the same magnitude as on adjacent transverse or longitudinal bulkhead is to be used on the under side of the stringer panel.

l_s and b_s are free sloshing length and breadth, in m, at height considered, as given in 33.2.3.

k	=	1	for L < 200
	=	1.4 – 0.002L	for L > 200
δ	=	Angle between the lower boundary panel and the horizontal.	

33.2.6 For tanks with upper panels higher than L/20 m above lowest seagoing waterline the sloshing and impact pressures given in 33.2.3 and 33.2.4 are to be multiplied by the following magnification factors:

1 + 6 z_e/L for longitudinal sloshing
1 + 7.5 z_e GM/B² for transverse sloshing

$1 + 18\ z_e/L$ for longitudinal impact
$1 + 17.5\ z_e\ GM/B^2$ for transverse impact

where:

z_e	=	$z_t - T_s - L/20$ m
z_t	=	Distance from baseline to panel consider, in m
T_s	=	Lowest seagoing draught, in m, $T_s = 0.50$ T may normally be used.
T	=	Mean moulded summer draught ,in m.

33.2.7 For tanks with smooth boundaries (no internal structural members) with tank bottom higher than the D/2, the low filling impact pressure as given in 33.2.5 is to be multiplied by the following magnification factor:

$$\left(1 + \frac{2z_i\theta}{l_s}\right)^2 \quad \text{in longitudinal direction}$$

$$\left(1 + \frac{2z_i\phi}{b_s}\right)^2 \quad \text{in transverse direction}$$

z_i	=	Distance from panel considered to D/2, in m
D	=	Moulded depth defined as the vertical distance in m from baseline to moulded deckline at the uppermost continuous deck measured amidships.
θ	=	Pitch angle in radian.
ϕ	=	Rolling angle in radian.

The roll angle (single amplitude) is given by:

$$\phi = \frac{50c}{B + 75} \quad \text{rad}$$

where:

c	=	$(1.25 - 0.025\ T_R)\ k$	
	=	1.2	for ships without bilge keel
k		1.0	for ships with bilge keel
		0.8	for ships with active roll damping facilities
T_R	=	The period of roll, not to be taken greater than 30	
k_r	=	Roll radius of gyration, in m	
GM	=	Metacentric height, in m	
T_R	=	$\frac{2k_r}{\sqrt{GM}}$ sec	

The values of k_r and GM to be used are to give the minimum realistic value of T_R for the load considered.
In case k_r and GM have not been calculated for such condition, the following approximate design values may be used:

k_r	=	0.39 B	for ships with even transverse distribution of mass
GM	=	0.07 B	in general

The pitch angle is given by:

$$\theta = 0.25\frac{a_0}{C_b} \quad \text{rad}$$

where:

a_0	=	A common acceleration parameter is given by:	
	=	$\frac{3C_1}{L} + C_V C_{V1}$	
C_1	=	0.0792 L	for $L \leq 90$, Coefficient of ship length as specified in 3.2.2 of this Part.

$C_V = \frac{\sqrt{L}}{50}$, maximum 0.2

$C_{V1} = \frac{V}{\sqrt{L}}$, minimum 0.8

33.3 Side Structures Subjected to Sloshing

33.3.1 Design Load for Sloshing

The design load of side structures for sloshing is not to be less than that obtained from the formula as given in 33.2.3.The sloshing pressure defined in 33.2.3 is to be taken as a constant value over the full tank depth and is to be taken as the greater of the sloshing pressures calculated for filling levels from 0.05 H_{max} to 0.95 H_{max}, in 0.05 H_{max} increments.

For tanks with free breadth b_s > 0.56B, the design pressure will be specially considered according to 33.2.2(c).

33.3.2 Side plating

The thickness requirement corresponding to lateral pressure is given by:

$$t = \frac{15.8 k_a s \sqrt{p}}{\sqrt{\sigma}} + t_c \qquad \text{mm}$$

where:

p	=	Design load for sloshing as given in 33.3.1
t_c	=	Corrosion addition, plates, stiffeners and girders in tanks for water ballast and or cargo oil is to be given a corrosion addition t_c as stated in Table 33-1.
k_a	=	Correction factor for aspect ratio of plate field
	=	$(1.1 – 0.25\ s/\ l)^2$
	=	maximum 1.0 for s/ *l* = 0.4
	=	minimum 0.72 for s/ *l* = 1.0
l	=	Stiffener span, in m
s	=	Stiffener spacing, in m, measured along the plating
σ	=	140/K for longitudinally stiffened side plating at neutral axis, within 0.4 L amidship
		120/K for transversely stiffened side plating at neutral axis, within 0.4 L amidship.
		Above and below the neutral axis, the σ-values are to be reduced linearly to the values for the deck and bottom plating, assuming the same stiffening direction and material factor K as for the plating considered.
		160/K within 0.05 L from F.P. and 0.1 L from A.P.
K	=	The material factor K as specified in 1.5.2(a) of this Part.

Between specified regions the σ-value may be varied linearly.

33.3.3 Longitudinals

The section modulus requirement is given by:

$$Z = \frac{83 l s p w_k}{\sigma} \qquad \text{cm}^3, \text{minimum } 15\ \text{cm}^3$$

where:

p	=	Design load for sloshing as given in 33.2.2(b)
l	=	Stiffener span, in m
s	=	Stiffener spacing, in m, measured along the plating
w_k	=	Section modulus corrosion factor in tanks

For stiffeners where formulae are given in the rules with the w_k increase in section modulus for compensation of the corrosion addition (t_c).

For rolled sections the section modulus requirement may be multiplied by a corrosion factor w_k, given by the following approximation:

w_k = Section modulus corrosion factor in tanks
= $1 + 0.05(t_{kw} + t_{kf})$ for flanged sections
= $1 + 0.06t_{kw}$ for bulbs
t_{kw} = Corrosion addition t_c as given in 33.3.2 with respect to the profile web
t_{kf} = Corrosion addition t_c as given in 33.3.2 with respect to the profile flange.

For flat bars the corrosion addition t_c may be added directly to the thickness.

σ = Allowable stress within 0.4 L amidships is given by:
= $\frac{225}{K} - 130f_2\frac{z_n - z_a}{z_n}$, maximum $\frac{160}{K}$
= $160/K$ for others

Between specified regions the σ-value may be varied linearly.

z_n = Vertical distance, in m, from the baseline or deck line to the neutral axis of the hull girder, whichever is relevant.
z_a = Vertical distance, in m, from the baseline or deck line to the point in question below or above the neutral axis, respectively.
f_2 = Stress factor f_{2b}, below the neutral axis of the hull girder, depending on surplus in midship section modulus and maximum value of the actual still water bending moments:
f_{2b} = $\frac{5.7(M_S + M_W)}{Z_B}$
f_2 = Stress factor f_{2d}, above the neutral axis of the hull girder, depending on surplus in midship section modulus and maximum value of the actual still water moments:
f_{2d} = $\frac{5.7(M_S + M_W)}{Z_D}$
Z_B = Midship section modulus, in cm^3, at bottom as built
Z_D = Midship section modulus, in cm^3, at deck as built
M_S = Normally to be taken as the largest design still water bending moment, in kNm.
M_W = Rule wave bending moment, in kNm, is given in 3.2.2 of this Part.

33.3.4 Main frames

(a) Main frames are frames located outside the peak tanks, connected to the floors, double bottom or hopper tanks and extended to the lowest deck, stringer or top wing tank on the ship side.

(b) The section modulus requirement is given by:

$$Z = KCl^2spw_k \qquad cm^3$$

where:

p = Design load for sloshing as given in 33.2.2(b)
C = 0.43
l = Corresponding to full length of frame including brackets, in m
s = Stiffener spacing, in m, measured along the plating

(c) The requirement given in (b) is based on the assumption that effective brackets are fitted at both ends. The length of brackets is not to be less than:

0.12 l for the lower bracket.
0.07 l for the upper bracket.

The section modulus of frame, including bracket, at frame ends is not to be less than as given in 33.3.4(b) with *l* equal to total span of frame including brackets and applying C-factors as given below.

Upper end:
C = 0.64 when internal pressure (p) is used.
Lower end:
C = 0.86 when internal pressure (p) is used.

When the length of the free edge of the bracket is more than 40 times the plate thickness, a flange is to be fitted, the width being at least 1/15 of the length of the free edge.

For single deck ships e.g. gas carriers, the end connection of main frames may alternatively be based on a direct calculation where the rotation of upper and lower ends are taken into account.

33.3.5 Tween deck frames and vertical peak frames

(a) Tween deck frames are frames between the lowest deck or the lowest stringer on the ship's side and the uppermost superstructure deck between the collision bulkhead and the after peak bulkhead.

(b) The section modulus is not to be less than the greater of:

$$Z = 0.55Kl^2 spw_k \quad cm^3$$
$$= \frac{k}{\sqrt{KL}} \quad cm^3$$

Where:
k = 6.5 for peak frames
= 4.0 for tween deck frames
p = Design load for sloshing as given in 33.2.2(b)
w_k = Section modulus corrosion factor in tanks as given in 33.3.3

33.3.6 Girders

The section modulus requirement is given by:

$$Z = \frac{100S^2 bpw_k}{\sigma} \quad cm^3$$

where:
p = Design load for sloshing as given in 33.2.2(b)
b = Loading breadth, in m
$\sigma = \frac{190}{K} - 130f_2\frac{z_n - z_a}{z_n}$, maximum $\frac{160}{K}$ for continuous longitudinal girders within 0.4L amidships
= 160/K for other girders.

Between specified regions the σ-value may be varied linearly.

f_2 = Stress factor f_{2b} as given in 33.3.3
= Stress factor f_{2d} as given in 33.3.3

The above requirement applies about an axis parallel to the ship's side.
z_a , z_n and w_k = As given in 33.3.3

33.3.7 Strengthening against liquid impact pressure in larger tanks

If the ship side forms boundary of larger ballast or cargo tanks with free sloshing length l_s > 0.13 L and or breadth b_s > 0.56 B, the side structure is to have scantlings according to 33.5.6 for impact loads referred to in 33.2.1.

33.4 Deck Structures Subjected to Sloshing

33.4.1 Design Load for Sloshing

When Deck as tank boundary in tanks and located less than 0.25 b_s away from tank sides ,the design load of deck structures for sloshing is not to be less than that obtained from the formula as given in 33.2.3.

For tanks with free breadth (no longitudinal wash bulkheads) b_s > 0.56B, the design pressure will be specially considered according to 33.2.2(c).

When Deck as tank boundary in tanks and located less than 0.25 l_s away from tank ends ,the design load of deck structures for sloshing is not to be less than that obtained from the formula as given in 33.2.3.

For tanks with free length (no transverse wash bulkheads or transverse web frames in narrow tanks) l_s > 0.13L, the design pressure will be specially considered according to 33.2.2(c).

The sloshing pressure defined in 33.2.3 is to be taken as a constant value over the full tank depth and is to be taken as the greater of the sloshing pressures calculated for filling levels from 0.05 H_{max} to 0.95 H_{max}, in 0.05 H_{max} increments.

33.4.2 Strength deck plating

The thickness requirement corresponding to lateral pressure is given by:

$$t = \frac{15.8 k_a s \sqrt{p}}{\sqrt{\sigma}} + t_c \qquad \text{mm}$$

where:

p	=	Design load for sloshing as given in 33.4.1
σ	=	Allowable stress within 0.4 L, given by:
	=	$\frac{175}{K} - 120 f_{2d}$, maximum $\frac{120}{K}$ for transversely − stiffened
	=	120/K for longitudinally-stiffened
	=	160/K within 0.1 L from the perpendiculars and within line of large deck openings. Between specified regions the σ-value may be varied linearly.
K	=	The material factor K as specified in 1.5.2(a) of this Part.
f_{2d}	=	Stress factor above the neutral axis as given in 33.3.3

33.4.3 Longitudinals

The section modulus requirement is given by:

$$Z = \frac{83 l^2 s p w_k}{\sigma} \qquad \text{cm}^3, \text{minimum } 15 \text{ cm}^3$$

where:

p	=	Design load for sloshing as given in 33.2.2(b)
w_k	=	Section modulus corrosion factor in tanks as given in 33.3.3
σ	=	Allowable stress, within 0.4 L midship given in Table 33-2
	=	160/K for continuous decks within 0.1L from the perpendiculars and for other deck longitudinals in general. Between specified regions the σ-value is to be varied linearly.

33.4.4 Transverse beams

The section modulus requirement is given by:

$$Z = 0.63Kl^2spw_k \quad cm^3, \text{minimum } 15\ cm^3$$

where:

p	=	Design load for sloshing as given in 33.2.2(b)
s	=	Stiffener spacing, in m, measured along the plating
l	=	Stiffener span in m, measured along the topflange of the member. For definition of span point, see 1.9.2 of this Part. For curved stiffeners l may be taken as the cord length
K	=	The material factor K as specified in 1.5.2(a) of this Part
w_k	=	Section modulus corrosion factor in tanks as given in 33.3.3

33.4.5 Girders

(a) The section modulus requirement for simple girders is given by:

$$Z = \frac{100S^2bpw_k}{\sigma} \quad cm^3$$

where:

p	=	Design load for sloshing as given in 33.2.2(b)
b	=	Loading breadth, in m
σ	=	$\frac{190}{K} - 130f_{2d}\frac{z_n - z_a}{z_n}$, maximum $\frac{160}{K}$, for continuous longitudinal girders within 0.4L amidships
	=	160/K or transverse girders and longitudinal girders Between specified regions the σ-value may be varied linearly

(b) The web area requirement (after deduction of cut-outs) at the girder ends is given by:

$$A = 0.07KSbp + 10ht_k \quad cm^2$$

where:

p	=	As given in 33.4.5(a)
b	=	As given in 33.4.5(a)
h	=	Girder height, in m.

The web area at the middle of the span is not to be less than 0.5A.

33.4.6 Strengthening against liquid impact pressure in larger tanks

If the deck forms boundary of larger ballast or cargo tanks with free sloshing length l_s > 0.13 L and or breadth b_s > 0.56 B, the deck structure is to have scantlings according to 33.5.5 for impact loads referred to in 33.2.1.

33.5 Bulkhead Structures Subjected to Sloshing

33.5.1 Design Load for Sloshing

(a) When Longitudinal bulkheads as well as transverse bulkheads at sides in wide tanks and be located less than 0.25 b_s away from tank sides, the sloshing load pressure of bulkhead structures is not to be less than that obtained from the formula as given in 33.2.3.

For tanks with free breadth (no longitudinal wash bulkheads) b_s > 0.56B, the design pressure will be specially considered according to 33.2.2(c).

The sloshing pressure defined in 33.2.3 is to be taken as a constant value over the full tank depth and is to be taken as the greater of the sloshing pressures calculated for filling levels from 0.05 H_{max} to 0.95 H_{max}, in 0.05 H_{max} increments.

(b) When Transverse bulkheads and longitudinal bulkheads at ends in long tanks and be located less than 0.25 l_s away from tank ends, the sloshing load pressure of bulkhead structures is not to be less than that obtained from the formula as given in 33.2.3.

For tanks with free length (no transverse wash bulkheads or transverse web frames in narrow tanks) l_s > 0.13L, the design pressure will be specially considered according to 33.2.2(c).

The sloshing pressure defined in 33.2.3 is to be taken as a constant value over the full tank depth and is to be taken as the greater of the sloshing pressures calculated for filling levels from 0.05 H_{max} to 0.95 H_{max}, in 0.05 H_{max} increments.

33.5.2 Bulkhead plating

(a) The thickness requirement corresponding to lateral pressure is given by:

$$t = \frac{15.8 k_a s \sqrt{p}}{\sqrt{\sigma}} + t_c \qquad \text{mm}$$

where:

p = Design load for sloshing as given in 33.5.1

σ = 160/K, for longitudinally stiffened longitudinal bulkhead plating at neutral axis irrespective of ship length.

= 140/K for transversely stiffened longitudinal bulkhead plating at neutral axis, within 0.4 L amidships, may however be taken as 160/K.
Above and below the neutral axis the σ-values is to be reduced linearly to the values for the deck and bottom plating, assuming the same stiffening direction and material factor as for the plating considered.

= 160/K for longitudinal bulkheads outside 0.05 L from F.P. and 0.1 L from A.P. and for transverse bulkheads in general.
Between specified regions the σ-value may be varied linearly.

K = The material factor K as specified in 1.5.2(a) of this Part.

(b) In corrugated bulkheads formed by welded plate strips, the thickness in flange and web plates may be differing. The thickness requirement then is given by the following modified formula:

$$t = \sqrt{\frac{500 s^2 p}{\sigma} - t_n^2} + t_c \qquad \text{mm}$$

where:

t_n = Thickness, in mm, of neighboring plate (flange or web), not to be taken greater than t as given in (a).

33.5.3 Longitudinals

The section modulus requirement for stiffeners and corrugations is given by:

$$Z = \frac{83 l^2 s p w_k}{\sigma} \qquad \text{cm}^3, \text{minimum } 15 \text{ cm}^3$$

where:

p	=	Design load for sloshing as given in 33.2.2(b)
w_k	=	Section modulus corrosion factor in tanks as given in 33.3.3
σ	=	$\frac{225}{K} - 130f_2\frac{z_n - z_a}{z_n}$, maximum $\frac{160}{K}$, within 0.4L amidships
	=	160/K within 0.1 L from perpendiculars. Between specified regions the σ-value is to be varied linearly.
f_2	=	Stress factor f_{2b} as given in 33.3.3
	=	Stress factor f_{2d} as given in 33.3.3

33.5.4 Vertical and transverse stiffeners on tank, wash, collision and watertight bulkheads

(a) Transverse bulkheads for ballast tanks are normally built with strength members only in the vertical direction (corrugations or double plane bulkheads), having unsupported spans from deck to inner bottom.

(b) The section modulus requirement for simple stiffeners and corrugations is given by:

$$Z = \frac{1000l^2 spw_k}{m\sigma} \quad cm^3$$

where:

p	=	Design load for sloshing as given in 33.2.2(b)
σ	=	160/K for tank, cargo and collision bulkheads
	=	220/K for watertight bulkheads
m	=	7.5 for vertical stiffeners simply supported at one or both ends
	=	10 for transverse stiffeners and vertical stiffeners which may be considered fixed at both ends
	=	10 for horizontal corrugations fixed at ends
	=	13 for vertical corrugation, upper end if fixed
	=	20 for vertical corrugation, upper end if flexible
	=	m_s for vertical corrugation, lower end to stool
	=	$\frac{8m_s}{m_s - 4}$ for vertical corrugation at middle of span, m(max.) = 13
m_s	=	$7.5\left[1 + \frac{4b_c\left(H_s + \frac{h_{db}}{2}\right)}{b_s l_{db}}\right]$
b_c	=	Breadth of stool, in m, where corrugation is welded in
b_s	=	Breadth of stool, in m, at inner bottom
H_s	=	Height of stool, in m
h_{db}	=	Height of double bottom, in m
l_{db}	=	Length of cargo hold double bottom between stools, in m, not to be taken larger than $6H_s$ or $6h_{db}$ if no stool.

33.5.5 Girders

(a) The section modulus requirement for simple girders is given by:

$$Z = \frac{100S^2 bpw_k}{\sigma} \quad cm^3$$

where:

p	=	Design load for sloshing as given in 33.2.2(b)

b = Loading breadth, in m

σ = $\frac{190}{K} - 130 f_2 \frac{z_n - z_a}{z_n}$, maximum $\frac{160}{K}$, for continuous longitudinal girders within 0.4L amidships

= 160/K for other girders.
Between specified regions the σ-value may be varied linearly.

= 160/K, for longitudinals girders in any case

f_2 = Stress factor f_{2b} as given in 33.3.3

= Stress factor f_{2d} as given in 33.3.3

(b) The web area requirement (after deduction of cut-outs) at the girder ends is given by:

$$A = ckSbpK + 10ht_k \quad cm^2$$

where:

p = Design load for sloshing as given in 33.2.2(b)

k = 0.06 for stringers and upper end of vertical girders

= 0.08 for lower end of vertical girders

c = 1.0

b = Loading breadth, in m

h = Girder height, in m.

The web area at the middle of the span is not to be less than 0.5 A.

33.5.6 Strengthening against liquid impact pressure in larger tanks

(a) For tanks with free sloshing length l_s > 0.13 L and/or breadth b_s > 0.56 B, structures are to be strengthened for the impact pressure as given in 33.2.1 using following formulae.

(b) Plating subjected to impact pressure p_i. The thickness is not to be less than:

$$t = 0.9k_a s\sqrt{p_i K} + t_c \quad mm$$

(c) Stiffeners supporting plating subjected to impact pressure p_i. The section modulus is not to be taken less than:

$$Z = 0.5 l l_p s p_i k_p w_k K \quad cm^3$$

The shear area at each end is not to be less than:

$$A_s = \frac{0.5 l (l_p - s) s p_i k_p K}{l_p} + 10ht_k \quad cm^2$$

where:

l_p = Loaded length of stiffener, maximum l, but need not be taken greater than 0.1 l_s or 0.1 b_s, respectively, for longitudinal or transverse impact pressure

k_p = Correction factor for resulting impact pressure

= $1.1 - 10\frac{l}{l'_s}$, minimum 0.35

l'_s = l_s or b_s as defined in 33.2.3

h = Height of stiffener, in m.

If the impact pressure is acting on the stiffener side, the stiffener web thickness is not to be less than:

$$t = 5 + \frac{sp_iK}{100} + t_c \qquad \text{mm}$$

The leg length of continuous fillet welding of the stiffener to the plating when impact pressure is acting on the stiffener side is not be less than:

$$t = \sqrt{2}\left(\frac{sp_i}{120} + \frac{t_c}{2}\right) \qquad \text{mm}$$

The net connection area of continuous stiffeners at girders is to satisfy the following expression:

$$2A_s = 1.7A_F + A_W \qquad \text{cm}^2$$

where:

A_F	=	Connection area at flange, in cm^2
A_W	=	Connection area at web, in cm^2

(d) Girders supporting stiffeners subjected to impact pressure p_i:

The section modulus is not to be less than:

$$Z = 0.5SS_pbp_ik_pw_kK \qquad \text{cm}^3$$

The shear area at each end is not to be taken less than:

$$A_s = 0.05Sbp_ik_pK + 10ht_k \qquad \text{cm}^2$$

where:

S_p	=	Loaded length of girder, maximum S, but need not be taken greater than 0.1 l_s or 0.1 b_s, respectively, for longitudinal or transverse impact pressure.
S	=	Girder span, in m. For definition of span point, see 1.9.2 of this Part.
k_p	=	Correction factor for impact pressure.
	=	$1.1 - 10\frac{b}{l'_s}$, minimum 0.25 for horizontals
	=	$1.1 - 10\frac{S_p}{l'_s}$, minimum 0.25 for verticals
l'_s	=	l_s or b_s as defined in 33.2.3.
h	=	Height of girder web, in m.
b	=	Loading breadth of girder, in m.

The web thickness is not to be less than:

$$t = 6.5 + 0.2\sqrt{p_iK} + t_c \qquad \text{mm}$$

The throat thickness of continuous fillet welding of girder webs to the plating subjected to impact pressure acting on the girder web side is not to be less than:

$$t = \sqrt{2}\left(\frac{sp_i}{120} + \frac{t_c}{2}\right) \qquad \text{mm}$$

The spacing of stiffeners on the web plate for girders in the tank where impact pressure occurs is not to be taken greater than:

$$s = \frac{1.2(t - t_c)}{\sqrt{p_i}} \qquad \text{m}$$

where:

p_i = Impact pressure at panel near girder.

33.6 Design Sloshing Load for Ships with Length less than 100 Meters

33.6.1 Design Load for Sloshing

Side, deck structures and transverse bulkheads at ends in tanks with $10 < l_s < 0.13$ L and located less than 0.25 l_s away from tank ends, the sloshing load pressure is to be considered and not to be less than that obtained from the formula as given in 33.2.3.

When $l_s > 0.13$ L, the design pressure will be specially considered according to 33.2.2(c).

The sloshing pressure defined in 33.2.3 is to be taken as a constant value over the full tank depth and is to be taken as the greater of the sloshing pressures calculated for filling levels from 0.05 H_{max} to 0.95 H_{max}, in 0.05 H_{max} increments.

33.6.2 Side Structures Subjected to Sloshing

(a) Side plating, general

The thickness requirement corresponding to lateral pressure is given by:

$$t = \frac{15.8 k_a s \sqrt{p}}{\sqrt{\sigma}} + t_c \qquad \text{mm}$$

where:

p	=	Design load for sloshing as given in 33.6.1
t_c	=	Corrosion addition, as stated in Table II 33-1.
σ	=	As given in Table II 33-3.

(b) Longitudinals

The section modulus requirement is given by:

$$Z = \frac{83 l^2 s p w_k}{\sigma} \qquad \text{cm}^3, \text{minimum 15 cm}^3$$

where:

p	=	Design load for sloshing as given in 33.2.2(b)
w_k	=	Section modulus corrosion factor in tanks as given in 33.3.3
σ	=	95 at deck or bottom within 0.4 L when $Z_A = Z_R$
	=	160 at deck or bottom within 0.4 L when $Z_A \geq 2 Z_R$
	=	160 within 0.25 D above and below the neutral axis
	=	160 within 0.1 L from the perpendiculars.
		Between specified regions the σ-value may be varied linearly.
Z_A	=	Midship section modulus, in cm^3, as built at deck or bottom respectively.
Z_R	=	Rule midship section modulus, in cm^3, as given in 3.2.2 of this Part.

(c) Main frames

(i) Main frames are frames located outside the peak tanks, connected to the floors or the double bottom and extending to the lowest deck or stringer on the ship's side.

(ii) The section modulus requirement is given by the greater of:

$Z = 0.5l^2 spw_k \quad cm^3$
$= 6.5\sqrt{L} \quad cm^3$
p = Design load for sloshing as given in 33.2.2(b)
l = Corresponding to full length of frame including brackets, in m.

(iii) The requirement given in (b) is based on the assumption that effective brackets are fitted at both ends. The length of brackets is not to be less than:

0.12 *l* for the lower bracket.
0.07 *l* for the upper bracket.

The section modulus of frame including bracket is not to be less than:

2 Z at lower end
1.7 Z at upper end

Z = As given in 33.6.2(c)(ii)

When the length of the free edge of the bracket is more than 40 times the plate thickness, a flange is to be fitted, the width being at least 1/15 of the length of the free edge.

(d) Tween deck frames and vertical peak frames

(i) Tween deck frames are frames between the lowest deck or the lowest stringer on the ship's side and the uppermost superstructure deck between the collision bulkhead and the after peak bulkhead.

(ii) The section modulus is not to be less than the greater of:

$Z = 0.55l^2 spw_k \quad cm^3$
$= k\sqrt{L} \quad cm^3$
k = 6.5 for peak frames
= 4.0 for tween deck frames
p = Design load for sloshing as given in 33.2.2(b)

(e) Girders

(i) The section modulus requirement is given by:

$$Z = \frac{100S^2 bpw_k}{\sigma} \quad cm^3$$

where:
p = Design load for sloshing as given in 33.2.2(b)
b = Loading breadth, in m
σ = As given in 33.6.2(b) for continuous longitudinal girders
= 160/K for other girders.

The above requirement apply about an axis parallel to the ship's side.

(ii) The web area requirement (after deduction of cut-outs) at the girder ends is given by:

$$A = kSbp + 10ht_k \quad cm^2$$

where:

k	=	0.06 for continuous horizontal girders and upper end of vertical girders
	=	0.08 for lower end of vertical girders
b	=	As given in 33.6.2(e)(i)
h	=	Girder height, in m
p	=	Design load for sloshing as given in 33.2.2(b)

The web area at the middle of the span is not to be less than 0.5 A.

The above requirement apply when the web plate is perpendicular to the ship's side.

For oblique angles the requirement is to be increased by the factor 1/cos θ, where θ is the angle between the web plate of the girder and the perpendicular to the ship's side.

33.6.3 Deck Structures Subjected to Sloshing

(a) Strength deck plating

The thickness requirement corresponding to lateral pressure is given by:

$$t = \frac{15.8 k_a s \sqrt{p}}{\sqrt{\sigma}} + t_c \qquad \text{mm}$$

where:

p	=	Design load for sloshing as given in 33.6.1
σ	=	As given in Table II 33-4.

(b) Longitudinals

The section modulus requirement is given by:

$$Z = \frac{83 l^2 s p w_k}{\sigma} \qquad \text{cm}^3, \text{minimum 15 cm}^3$$

where:

p	=	Design load for sloshing as given in 33.2.2(b)
σ	=	95 within 0.4 L midship when $Z_D = Z_R$
	=	160 within 0.4 L midship when $Z_D \geq 2\ Z_R$
	=	160 within 0.1 L from the perpendiculars.
		Between specified regions the σ-value may be varied linearly.

(c) Transverse beams

The section modulus requirement is given by:

$$Z = 0.63 l^2 s p w_k \qquad \text{cm}^3, \text{minimum 15 cm}^3$$

where:

p = Design load for sloshing as given in 33.2.2(b)

(d) Simple girders

(i) The section modulus requirement for simple girders is given by:

$$Z = \frac{100 S^2 b p w_k}{\sigma} \qquad \text{cm}^3$$

where:

p = Design load for sloshing as given in 33.2.2(b)
b = Loading breadth, in m
σ = Allowable stress as given in 33.6.2(b) for longitudinal girders
= 160 for other girders.

(ii) The web area requirement (after deduction of cut-outs) at the girder ends is given by:

$$A = 0.06Sbp + 10ht_k \qquad cm^2$$

where:

p = As given in 33.6.3(d)(i)
b = As given in 33.6.3(d)(i)
h = Girder height, in m.

The web area at the middle of the span is not to be less than 0.5 A.

33.6.4 Bulkhead Structures Subjected to Sloshing

(a) Bulkhead plating

The thickness requirement corresponding to lateral pressure is given by:

$$t = \frac{15.8k_a s\sqrt{p}}{\sqrt{\sigma}} + t_c \qquad mm$$

where:

p = Design load for sloshing as given in 33.6.1
σ = As given in Table II 33-5.

(b) Longitudinals

The section modulus requirement for stiffeners and corrugations is given by:

$$Z = \frac{83l^2 spw_k}{\sigma} \qquad cm^3, \text{minimum } 15\ cm^3$$

where:

p = Design load for sloshing as given in 33.2.2(b)
σ = 95 at deck or bottom within 0.4 L when $Z_A = Z_R$
= 160 at deck or bottom within 0.4 L when $Z_A \geq 2\ Z_R$
= 160 within 0.25 D above and below the neutral axis
= 160 within 0.1 L from the perpendiculars.
Between specified regions the σ-value may be varied linearly.

(c) Vertical and transverse stiffeners on tank bulkheads

(i) Transverse bulkheads for ballast are normally built with strength members only in the vertical direction (corrugations or double plane bulkheads), having unsupported spans from deck to inner bottom.

(ii) The section modulus requirement for simple stiffeners and corrugations is given by:

$$Z = \frac{6.25l^2 spw_k}{m} \qquad cm^3$$

where:

p	=	Design load for sloshing as given in 33.2.2(b)
m	=	7.5 for vertical stiffeners simply supported at one or both ends
	=	10 for transverse stiffeners and vertical stiffeners which may be considered fixed at both ends.

(d) Stiffeners on watertight bulkheads and wash bulkheads

(i) The section modulus requirement is given by:

$$Z = \frac{1000l^2 spw_k}{m\sigma} \qquad cm^3$$

where:

p	=	Design load for sloshing as given in 33.2.2(b)
σ	=	160 for collision bulkheads
	=	220 for other watertight bulkheads
m	=	16 for member fixed at both ends
	=	12 for member fixed at one end (lower) and simply supported at the other
	=	8 for member simply supported at both ends.

The m-value may be adjusted for members with boundary conditions not corresponding to the above specification.

(e) Girders

(i) The section modulus requirement for simple girders is given by:

$$Z = \frac{100S^2 bpw_k}{\sigma} \qquad cm^3$$

where:

p	=	Design load for sloshing as given in 33.2.2(b)
b	=	Loading breadth, in m
σ	=	As given in 33.6.4(b) for continuous longitudinal girders
	=	160 for other girders.

(ii) The web area requirement (after deduction of cut-outs) at the girder ends is given by:

$$A = kSbp + 10ht_k \qquad cm^2$$

where:

p	=	As given in 33.6.4(e)(i)
k	=	0.06 for stringers and upper end of vertical girders
	=	0.08 for lower end of vertical girders
b	=	As given in 33.6.4(e)(i)
h	=	Girder height, in m.

The web area at the middle of the span is not to be less than 0.5 A.

Table II 33-1
Corrosion Addition t_c in mm

Internal members and plate boundary between spaces of the given category	Tank / hold region	
	Within 1.5 m below weather deck tank or hold top	Elsewhere
Ballast tank(1)	3.0	1.5
Cargo oil tank only	2.0	1.0 (0) (2)
Plate boundary between given space categories	Tank / hold region	
	Within 1.5 m below weather deck tank or hold top	Elsewhere
Ballast tank(1) / Cargo oil tank only	2.5	1.5 (1.0) (2)
Ballast tank(1) / Hold of dry bulk cargo carrier	2.0	1.5
Ballast tank(1) / Other category space(3)	2.0	1.0
Cargo oil tank only / Other category space(3)	1.0	0.5 (0) (2)

Note:
(1) The term ballast tank also includes combined ballast and cargo oil tanks, but not cargo oil tanks which may carry water ballast according to MARPOL 73/78 Annex I Reg. 18.
(2) The value in brackets refers to non-horizontal surfaces.
(3) Other category space denotes the hull exterior and all spaces other than water ballast and cargo oil tanks and holds of dry bulk cargo carriers.

Table II 33-2
Allowable Stresses

Position of deck longitudinals	Allowable stress σ (N/mm^2)
Strength deck, long superstructures and effective deckhouses above strength deck	$\frac{225}{K} - 130f_{2d}$, maximum $\frac{160}{K}$
Continuous decks below strength deck	$\frac{225}{K} - 130f_{2d}\frac{z_n - z_a}{z_n}$, maximum $\frac{160}{K}$

Table II 33-3
Allowable Stresses

Structural system	Allowable stress σ (N/mm^2) (1)
Transverse stiffening	120 within 0.4 L at neutral axis $60Z_A/Z_R$, maximum 120 within 0.4 L at deck or bottom 160 within 0.1 L from the perpendiculars
Longitudinal stiffening	140 within 0.4 L at neutral axis 120 within 0.4 L at deck or bottom 160 within 0.1 L from the perpendiculars

Note:
(1) Between specified regions the σ-value may be varied linearly.

Table II 33-4
Allowable Stresses

Structural system	Allowable stress σ (N/mm^2) (1)
Transverse stiffening	$60Z_D/Z_R$, maximum 120 within 0.4 L 160 within 0.1 L from the perpendiculars
Longitudinal stiffening	120 within 0.4 L 160 within 0.1 L from the perpendiculars
Note: (1) Between specified regions the σ-value may be varied linearly.	

Table II 33-5
Allowable Stresses

Bulkhead	Allowable stress σ (N/mm^2) (1)
Longitudinal bulkhead	Transverse stiffening: 140 within 0.4 L at neutral axis $60Z_A/Z_R$, at deck or bottom 160 within 0.1 L from perpendiculars
	Longitudinal stiffening: 160 within 0.4 L at neutral axis 120 within 0.4 L at deck or bottom 160 within 0.1 L from perpendiculars
Transverse tank bulkheads	160
Collision bulkheads	160
Watertight bulkheads	220
Note: (1) Between specified regions the σ-value may be varied linearly.	

Chapter 34
Noise Levels on Board Ships

34.1 General

34.1.1 Application

(a) The requirement in this chapter is intended to provide standards to prevent the occurrence of potentially hazardous noise and vibration on board ships and to provide acceptable standards for the applying ships.

(1) Ships which comply with the limits for noise levels of the code on noise levels on board ships (hereinafter referred to as "the Noise Code") adopted by resolution MSC.337(91), as given in Table II 34-1, will be assigned the notation **NR**. Where **NR** means the noise restricted by the noise level limits which quantify the comfort rating of noise for the ship.

(2) Ships which comply with the limits for vibration of ISO 20283-5:2016, as given in Table II 34-2, will be assigned the notation **VR**. Where **VR** means the vibration restricted by values given in Table II 34-2.

(b) Ships not engaged on international voyages may apply **NR** notation voluntarily, except in case where specified by the Administration.

(c) The **VR** notation is applicable to ships applying vibration measurement and evalutation according to ISO 20283-5:2016.

34.1.2 Notation

(a) Ships of a gross tonnage of 1,600 and above but less than 10,000, which fulfill the requirements of 34.2.1 and 34.2.4 of this chapter and meet the limits for noise levels of Level I given in Table II 34-1, will be eligible to receive the notation **NR-I**.

(b) Ships of a gross tonnage of 10,000 and above, which fulfill the requirements of 34.2.1 and 34.2.4 of this chapter and meet the limits for noise levels of Level II given in Table II 34-1, will be eligible to receive the notation **NR-II**.

(c) Ships of a less gross tonnage than those categories given in (a) and (b) above may apply for a higher Level of noise limits at Owners' discretion.

(d) Ships affixed with **VR** notation comply with the requirements of 34.3 and meet the limits given in Table II 34-2.

34.1.3 Definitions

(a) Noise – Audible air pressure fluctuations generated by ship machinery, systems or structure, i.e. in the frequency range 20 to 20 000 Hz.

(b) dB(A) – A-weighted global value of the sound pressure level.

(c) Chapter 6 Acoustic insulation between accommodation spaces.

(c) Other noise related definitions are to be in accordance with the Section 1.4 Definitions of the Noise Code.

(d) Crew accommodation space – Space intended for crew recreational and administration use, namely cabins including day and sleeping rooms, hospitals, mess rooms, recreation rooms.
Note: Recreation rooms are lounges, smoke rooms, cinemas, gymnasiums, libraries, hobby rooms and game rooms.

(e) Work space – Area allocated for predominant manual work, namely workshops, laundries, galleys and laboratories, but except machinery spaces.

(f) Machinery space – Space which contains steam or internal-combustion machinery, pumps, air compressors, boilers, oil fuel units, major electrical machinery, oil filling stations, thrusters, refrigerating, stabilizing, steering gear, ventilation and air conditioning machinery, etc. and trunks to such spaces
Note: Machinery spaces are not meant for longer stay, hence they are not considered in ISO 20283-5:2016.

(g) Other vibration related definitions are to be in accordance with the Section 3 Terms and definitions of ISO 20283-5:2016.

34.2 Noise on Board ships

34.2.1 For the condition of assigning the notation **NR**, the provisions in the following Chapters of the Noise Code are to be conformed.

(a) Chapter 2 Measuring equipments.

(b) Chapter 3 Measurement.

(c) Chapter 6 Acoustic insulation between accommodation spaces.

34.2.2 For the classification purpose of assigning the notation **NR**, the confirmation to the provisions in the following Chapters of the Noise Code are not included.

(a) Chapter 5 Noise exposure limits.

(b) Chapter 7 Hearing protection and warning information.

34.2.3 Noise level limits
The noise level limits are categorized into two Levels, Level I and Level II, given in Table II 34-1.

34.2.4 Survey report

(a) A noise survey report is to be made for each ship. The report is to comprise information on the noise levels in the various spaces on board. The report is to show the reading at each specified measuring point. The points are to be marked on a general arrangement plan, or on accommodation drawings attached to the report, or otherwise are to be identified.

(b) The format for noise survey reports is set out in Appendix 1 of the Noise Code.

(c) The noise survey report is to be always carried on board and be accessible for the crew.

34.3 Vibration on Board Ships

34.3.1 For the condition of assigning the notation **VR**, the provisions in the following Sections of the ISO 20283-5:2016 are to be conformed.

(a) Section 4 Instrumentation.

(b) Section 5 Measurement locations and directions.

(c) Section 6 Measurement conditions.

(d) Section 7 Measurement procedure.

(e) Section 8 Evaluation.

34.3.2 Criteria

The values given in Table II 34-2 are to be regarded as maximum acceptable vibration values.

34.3.3 Test report

(a) A test report containing the information and data specified in Section 9 of ISO 20283-5:2016, is to be provided.

(b) The format for the report is set out in Annex B of ISO 20283-5:2016.

Table II 34-1
Limits for Noise Levels (dB(A))

Designation of rooms and spaces	Level I	Level II
	Ship size	
	1,600 up to 10,000 GT	≥10,000 GT
Work spaces		
Machinery spaces(1)	110	110
Machinery control rooms	75	75
Workshops other than those forming part of machinery spaces	85	85
Non–specified work spaces(2) (other work areas)	85	85
Navigation spaces		
Navigating bridge and chartrooms	65	65
Look-out posts, incl. navigating bridge wings(3) and windows	70	70
Radio rooms (with radio equipment operating but not producing audio signals)	60	60
Radar rooms	65	65
Accommodation spaces		
Cabin and hospitals(4)	60	55
Messrooms	65	60
Recreation rooms	65	60
Open recreation areas (external recreation areas)	75	75
Offices	65	60
Service spaces		
Galleys, without food processing equipment operating	75	75
Serveries and pantries	75	75
Normally unoccupied spaces		
Holds, deck areas and other spaces(5)	90	90

Note:

(1) If the maximum noise levels are exceeded when machinery is operating, stay should be limited to very short periods or not allowed at all.

(2) Examples are open deck workspaces that are not machinery spaces, and open deck workspaces where communication is relevant.

(3) Reference is made to the Recommendation on methods of measuring noise levels at listening posts (resolution A.343(IX)) which also applies.

(4) Hospitals: treatment rooms with beds.

(5) Measurements shall be taken in all locations with unusually high noise levels where seafarers may be exposed, even for relatively short periods, and at intermittently used machinery locations.
In order to restrict the number of measurements and recordings, noise levels need not be measured for normally unoccupied spaces, holds, deck areas and other spaces which are remote from sources of noise.
In cargo holds, at least three microphone positions in parts of holds where personnel are likely to carry out work shall be used. Also refer to 3.14 of resolution MSC.337(91).

Table II 34-2
Values of acceptable vibration

Type of occupied space	Value	
	velocity	acceleration
Crew spaces		
Crew accommodation	3.5 mm/s	125 mm/s^2
Work spaces	6.0 mm/s	214 mm/s^2
Offices	4.5 mm/s	161 mm/s^2
Navigation bridge and engine control room	5.0 mm/s	179 mm/s^2
Open-deck recreation spaces	4.5 mm/s	161 mm/s^2
Passenger spaces		
Cabins and public spaces	3.5 mm/s	125 mm/s^2
Open-deck recreation spaces	4.5 mm/s	161 mm/s^2

Tel: *+886 2 25062711*
Fax: *+886 2 25074722*
E-mail: *cr.tp@crclass.org*
Website: *http://www.crclass.org*
© CR – All rights reserved

CR

CR Classification Society

FOUNDED 1951

RULES FOR THE CONSTRUCTION AND CLASSIFICATION OF COAST GUARD SHIPS 2021

PART III — HULL CONSTRUCTION AND EQUIPMENT FOR HIGH-SPEED CRAFT

August 2020

CR

CR Classification Society

FOUNDED 1951

RULES FOR THE CONSTRUCTION AND CLASSIFICATION OF COAST GUARD SHIPS 2021

PART III — HULL CONSTRUCTION AND EQUIPMENT FOR HIGH-SPEED CRAFT

August 2020

RULES FOR THE CONSTRUCTION AND CLASSIFICATION OF COAST GUARD SHIPS 2021

PART III HULL CONSTRUCTION AND EQUIPMENT FOR HIGH-SPEED CRAFT

CONTENTS

Chapter 1 General 1

1.1 Definition 1
1.2 General Requirements 6
1.3 Direct Analysis Methods 14
1.4 Guidelines for Finite Element Analysis 24

Chapter 2 Hull Structures and Arrangements 28

2.1 Primary Hull Strength 28
2.2 Design Pressures 37
2.3 Plating 49
2.4 Framing 65
2.5 Hull Structural Arrangement 76
2.6 Arrangement, Structural Details and Connections 81
2.7 Keels, Stems, Shaft Struts, and Propeller Nozzles 96
2.8 Rudders and Steering Equipment 102
2.9 Protection of Deck Openings 127
2.10 Protection of Shell Openings 134
2.11 Bulwarks, Rails, Ports, Portlights, Windows, Ventilators, Tank Vents and Overflows 145
2.12 Protective Coatings 156

Chapter 3 Subdivision and Stability 160

3.1 General Requirements 160

Chapter 4 Fire Safety Measures 161

4.1 Structural Fire Protection 161

Chapter 5 Equipment **162**

5.1 Equipment 162

Chapter 6 Navigation Bridge Visibility **170**

6.1 General 170
6.2 View of the Sea Surface 170
6.3 Blind Sectors 170
6.4 Horizontal Field of Vision 170
6.5 Ship's Side 170
6.6 Navigation Bridge Front Windows 170
6.7 Ships of Unconventional Design 171
6.8 Navigation Bridge Visibility during Ballast Water Exchange 171

Chapter 7 Testing, Trials and Surveys During Construction – Hull **173**

7.1 Tank, Bulkhead and Rudder Tightness Testing 173
7.2 Trials 173
7.3 Surveys 173

Appendix 1 Guidelines for Calculating Bending Moment and Shear Force in Rudders and Rudder Stocks **174**

A1.1 Application 174
A1.2 Spade Rudders 174
A1.3 Rudders Supported by Shoepiece 177
A1.4 Rudders Supported by a Horn with One Pintle 178
A1.5 Rudders Supported by a Horn Arranged with Two Pintles (Supports) 179

Appendix 2 Guidance on Analysis of the Cross Deck Structure of a Multi-Hull Craft **182**

A2.1 Transverse Bending and Shear Stress 182
A2.2 Center of Torsional Rotation 182
A2.3 Maximum Bending Stress on Each Element 183

Appendix 3 Alternative Method for the Determination of "V" Shaft Strut Requirements **185**

A3.1 General 185
A3.2 Loads and Moments Acting on Strut 185
A3.3 Required Section Modulus of Strut at the Barrel 186
A3.4 Required Section Modulus of Strut at the Hull 186
A3.5 Requirements for Struts Constructed of Aluminum 186

Appendix 4 Computer Software for Onboard Stability Calculations..... 187

A4.1 General..... 187
A4.2 Calculation Systems..... 187
A4.3 Types of Stability Software..... 187
A4.4 Functional Requirements 188
A4.5 Acceptable Tolerances 191
A4.6 Approval Procedure 193
A4.7 Operation Manual 194
A4.8 Installation Testing..... 195
A4.9 Periodical Testing..... 195
A4.10 Other Requirements 195

Chapter 1
General

1.1 Definition

1.1.1 Application
The following definitions of terms apply throughout the requirements in the Rules.

1.1.2 "Length (L)" is the distance, in meters, on the summer load waterline from the fore side of the stem to the after side of the rudder post, or to the center of the rudder stock if there is no rudder post. L is not to be less than 96 %, and need not be greater than 97 %, of the extreme length on the summer load waterline. The summer load waterline is the designed maximum load line corresponding to the full load condition. In crafts without rudder post and stock, L is to be taken equal to 97% of the extreme length on the summer load waterline. In crafts with unusual stem or stern arrangements, L is considered on a case by case basis.

1.1.3 "Freeboard Length (L_f)", in meters, means 96% of the total length on a waterline at 85% of the least molded depth measured from the top of the keel, or the length from the fore-side of the stem to the axis of the rudder stock on that waterline, if that be greater. Where the stem contour is concave above the waterline at 85% of the least molded depth, both the forward terminal of the total length and the fore-side of the stem respectively shall be taken at the vertical projection to that waterline of the aftermost point of the stem contour (above that waterline). In crafts designed with a rake of keel the waterline on which this length is measured shall be parallel to the designed waterline.

1.1.4 "Breadth (B)" is the horizontal distance, in meters, measured at the broadest part of the hull to the molded line of the frame in the craft.
Breadth used in 2.1.1(a)(i) for craft which have flare or tumblehome, is the mean breadth of the waterline breadth and the maximum breadth between the waterline and main deck at the longitudinal center of flotation (LCF).

1.1.5 "Depth (D)" is the vertical distance, in meters, at the middle of the length, L, from the top of keel to the top of the uppermost complete deck beam at side. On craft with rabbeted keel construction, D is to be measured from the rabbet line. In cases where watertight bulkheads extend to a deck above the freeboard deck and are to be recorded in the Register as effective to that deck, D is to be measured to the bulkhead deck.

1.1.6 "Draft for Scantling (d)" is the draft, in meters, measured at the middle of the length L from the molded keel or the rabbet line at its lowest point to the estimated summer load waterline or the design load waterline in the displacement mode.

1.1.7 "Freeboard deck" is normally the uppermost complete deck exposed to weather and sea, which has permanent means of closing all openings in the weather part thereof, and below which all openings in the sides of the craft are fitted with permanent means of watertight closing.
Where the designed load draught is less than derived from the provision of the International Convention on Load Lines, 1966 assuming the existing deck below the freeboard deck as the freeboard deck, the existing lower deck may be designated as the freeboard deck in the application of the Rules, provided it is to be continuous in a fore and aft direction at least between the machinery space and peak bulkheads and continuous athwartships. Where this lower deck is stepped, the lowest line of the deck and the continuation of that line parallel to the upper part of the deck is taken as the freeboard deck.

1.1.8 "Bulkhead deck" is the highest deck to which watertight transverse bulkheads except both peak bulkheads extend and are made effective.

1.1.9 "Strength deck" is the deck which forms the top of the effective hull girder at any part of its length.

1.1.10 "Superstructure deck" is a deck above the freeboard deck to which the side shell plating extends or of which the sides are fitted inboard of the hull side not more than 4% of the breadth, B. Except where otherwise specified, the term superstructure deck where used in the Rules refers to the first such deck above the freeboard deck.

1.1.11 "Superstructure" is an enclosed structure above the freeboard deck having side plating as an extension of the shell plating, or not fitted inboard of the hull side more than 4% of the breadth B.

1.1.12 "Deckhouse" is an enclosed structure above the freeboard deck, having side plating set inboard of the hull side-shell plating more than 4% of the breadth B.

1.1.13 "Displacement Δ", is the mass displacement of the craft in the design condition in metric tons, unless otherwise specifically noted.

1.1.14 "Block Coefficient (C_b)" is the coefficient given by dividing the volume of moulded displacement by LBd as definded above.

1.1.15 "Gross tonnage" is the measurement of the internal volume of spaces within the craft as defined by the International Convention on Tonnage Measurement of Ships, 1969.

1.1.16 "Deadweight (DWT)", in metric tons, for the purpose of the Rules, is the difference, between the displacement of the craft at its summer load line or the craft with all tanks filled, maximum cargo loaded, maximum stores, and personnel or passengers and their effects on board, in water having a specific gravity of 1.025, and the unloaded weight of the craft. For the purpose of the Rules, the unloaded weight is the displacement of the craft, in metric tons, with no cargo, fuel, lubricating oil, ballast water, fresh water nor feed water in tanks, no consumable stores, and no personnel or passengers nor their effects.

1.1.17 "Significant wave height" is the average height of the one-third highest observed wave heights over a given period.

1.1.18 "Speed" is the designed speed, in knots at the maximum continuous rating of the propelling machinery when the craft with clean bottom runs ahead on calm sea at the designed summer load draught. Operational speed is 90% of design speed.

1.1.19 "Rabbet Line (Fiber Reinforced Plastic)" is the line intersection between the outside of a craft’s bottom and a craft’s keel. Where there is no keel, the rabbet line is the bottom of the craft.

1.1.20 "Administration" is the government of the state whose flag the craft is entitled to fly.

1.1.21 "Passenger Craft" is a craft which carries more than 12 passengers.

1.1.22 "Cargo Craft" is any craft other than a passenger craft, which is capable of maintaining the main functions and safety systems of unaffected spaces, after damage in any one compartment on board.

1.1.23 "Passenger" is every person other than the master and members of the crew or other persons employed or engaged in any capacity on board a craft on the business of that craft, and a child under one year of age.

1.1.24 "Place of Refuge" is any naturally or artificially sheltered area which may be used as shelter by a craft under conditions likely to endanger its safety.

1.1.25 "Crewboat" is a craft specifically fitted for the transferring/transporting of industrial personnel in the offshore industry between a shore base facility and the offshore installations and vise versa. Crewboats may also carry cargo.

1.1.26 "Industrial Personnel" is any person carried onboard a Crewboat for the sole purpose of carrying out the business or functions of the offshore installations.

1.1.27 Fiber-Reinforced Plastic (FRP)

FRP consists of two basic components: a glass-filament or other material fiber reinforcement and a plastic, or resin, in which the reinforcing material is imbedded.

(a) Reinforcement

Reinforcement is a strong, inert material bonded into the plastic to improve its strength, stiffness and impact resistance. Reinforcements are usually fibers of glass (a lime-alumina-silicate composition having a low alkali content) or other approved material such as aramid or carbon fiber, in a woven or non-woven form, with a strong adhesive bond to the resin.

(i) Strand

A bundle of continuous filaments combined in a single, compact unit.

(ii) Roving

A band or ribbon of parallel strands grouped together.

(iii) Yarn

A twisted strand or strands suitable for weaving into a fabric.

(iv) Binder

The agent applied in small quantities to bond the fibers in mat form.

(v) Coupling Agent

An active water soluble chemical that allows resin to adhere to glass.

(vi) Chopped-strand Mat

A blanket of randomly oriented chopped-glass strands held together with binder.

(vii) Woven Roving

A coarse fabric woven from rovings.

(viii) Cloth

A fabric woven from yarn.

(ix) Peel-Ply

An “E” glass fabric that does not have any coupling agent applied, used as a protective covering on a laminate being prepared for a secondary bond to keep foreign particles from adhering to the surface.

(x) Uni-directional

A woven or non-woven reinforcement with substantially more fibers in one principal axis of the reinforcing ply.

(xi) Double Biased

A woven or non-woven reinforcement with fibers primarily at +45° to the principal axes of the reinforcing ply.

(xii) Knitted or Stitched Fabrics

Two or more layers of unidirectional fabrics that are stitched together.

(xiii) Bi-axial Fabric

A stitched or knitted reinforcement with fibers primarily in the two principal axes of the reinforcing ply.

(xiv) Tri-Axial Fabric

A stitched or knitted reinforcement with fibers running in one principal axis of the ply and in addition, with fibers running at + and -45° to the warp.

(xv) Ply Principal Axes

The two principal axes of a reinforcing ply are the axis that is parallel to the warp and the axis that is parallel to the fill.

(xvi) Warp

The roving or yarn running lengthwise in woven fabric (in the "roll direction")

(xvii) Fill, Weft or Woof

The roving or yarn running at right angles to the warp in a woven fabric.

(xviii) "E" glass

A family of glass reinforcement material of aluminoborosilicate composition and having high electrical resistivity.

(xix) "S" glass

A family of glass reinforcement material of magnesium aluminosilicate composition that contains a higher silicon content and provides higher strength and stiffness properties than “E” glass.

(xx) Kevlar

An aramid fiber reinforcement.

(xxi) Carbon Fiber

A reinforcement material made of mostly carbon produced by the pyrolysis of organic precursor fibers in an inert environment.

(b) Resin

Resin is a highly reactive synthetic that in its initial stage is a liquid, but upon activation is transformed into a solid.

(i) Accelerator

A material that, when mixed with a catalyst or resin, speeds the cure time.

(ii) Additive

A substance added to another substance, usually to improve properties, such as plasticizers, initiators, light stabilizers and flame retardants.

(iii) Catalyst or Initiator

A material that is used to activate resin, causing it to harden.

(iv) Crazing

Hairline cracks, either within or on the surface of resin, caused by mechanical or thermal stresses.

(v) Cure

To change resin from a liquid to a solid.

(vi) Cure Time

The time required for resin to change from a liquid to a solid after a catalyst has been added.

(vii) Exothermic Heat

The heat given off as the result of the action of a catalyst on resin.

(viii) Filler

A material added to resin to modify its working properties or other qualities, or to lower densities.

(ix) Gel

A partially cured resin in a semi-solid state similar to gelatin in consistency.

(x) Gel Time

The time required to change a flowable, liquid resin into a nonflowing gel.

(xi) Inhibitor

A material that retards activation or initiation of resin, thus extending shelf life or influencing exothermic heat or gel time.

(xii) Polymerization

The reaction that takes place when resin is activated or initiated.

(xiii) Pot Life

The length of time that a catalyzed resin remains workable.

(xiv) Shelf Life

The length of time that an uncatalyzed resin maintains its working properties while stored in a tightly sealed, opaque container.

(xv) Tack

The degree of stickiness of the resin.

(xvi) Thixotropy

The property or phenomenon, exhibited by some resins, of becoming jelly-like at rest but becoming fluid again when stirred or agitated. This facilitates the application of the resin to inclined or vertical surfaces.

(xvii) Polyester Resin

A thermosetting resin that is formed by combining saturated and unsaturated organic acids. Such as orthophthalic and isophthalic acids.

(xviii) Vinylester Resin

A thermosetting resin that consists of a polymer chain and an acrylate or methacrylate termination.

(xix) Epoxy Resin

A resin that contains one or more of the epoxide groups.

(c) Laminate

A laminate is a material composed of successive bonded layers, or plies, of resin and fiber or other reinforcing substances.

(i) Bi-directional Laminate

A laminate having essentially the same strength and elastic properties in the two in plane principal axes. Bi-directional laminates may be constructed of bi-axial, double bias, tri-axial, mat or unidirectional reinforcing layers, or a combination of any of these.

(ii) Uni-directional Laminate

A laminate with substantially more of the fibers in the plane of the laminate oriented in one of the two principal axis of the laminate plane so that the mechanical properties along that axis are appreciably higher than along the other natural axis.

(iii) Sandwich Laminate

A laminate consisting of two fiber reinforced plastic skins attached to a non-structural or structural core (see 1.1.27(d) of this Chapter"Encapsulation").

(iv) Barcol Hardness

A measurement of the hardness of a laminate and thereby the degree of completion of the cure.

(v) Delamination

The separation of the layers of material in a laminate.

(vi) Gel Coat

The first resin applied to mold when fabricating a laminate to provide a smooth protective surface for the laminate.

(vii) Layup

The process of applying to a mold the layers of resin and reinforcing materials that make up a laminate. These materials are then compressed or densified with a roller or squeegee to eliminate entrapped air and to spread resin evenly. Also a description of the component materials and geometry of a laminate.

(viii) Verified Minimum Mechanical Property

The mechanical properties of laminates differing from the basic, verified by the appropriate test(s) listed below.

	Density	Minimum Shear Strength
Material	Kg/m^3	N/mm^2
Balsa, end-grain	104	1.6(1)
Balsa, end-grain	144	2.5(1)
PVC, crosslinked	180	0.9
PVC, crosslinked	100	1.4
PVC, linear(2)	80-96	1.2

Notes:

(1) These values are for Ecuadorian balsa.

(2) Caution is to be taken when linear PVC cores are used in areas that are susceptible to high temperatures because of their low heat distortion temperature.

(ix) Laminate Principal Axes

The two principal axes of a square or rectangular plate panel are for the application of the Rules those perpendicular and parallel to the plate panel edges.

(x) Vacuum Bagging

A method used to apply a uniform pressure over an area by applying a vacuum to that area.

(xi) Resin Impregnation

A process of construction for large layers of fabric that consists of running a roll of fabric through a resin bath to completely saturate the fabric.

(xii) Resin Transfer Molding

A closed mold method that mechanically pumps resin through dry fabric previously placed in the mold.

(xiii) Resin Infusion

A method of FRP construction that uses a vacuum to pull catalyzed resin through dry fabric.

(xiv) Primary Bond

The bond that is formed between two laminated surfaces when the resin on both surfaces has not yet cured.

(xv) Secondary Bond

The bond that is formed between two laminated surfaces when the resin on one of the two surfaces has cured.

(xvi) Post Cure

The act of placing a laminate in an autoclave and raising the temperature to assist in the cure cycle of the resin.

(xvii) Autoclave

A large oven used in post curing large laminated parts.

(d) Encapsulation

The containment of a core material, such as softwoods, balsa, PVC (cross linked) or linear polymer, within FRP laminates. The cores may be structurally effective or ineffective.

(i) Bedding Putty

Material used to adhere the core material to the FRP skins.

(ii) Scores

Slits cut into the core material to aid in forming the core to complex shapes.

1.2 General Requirements

1.2.1 Materials

The Rules are intended for welded craft constructed of steel, complying with the applicable requirements of Parts XI and XII of the Rules for Steel Ships; and fiber reinforced plastic (FRP) craft, and welded craft constructed of aluminum, complying with Part II Chapters 1 and 2 of the Rules; respectively. For Crafts, the use of materials other than those specified in Part II of the Rules and Part XI of the Rules for Steel Ships, and the corresponding scantlings will be specially considered.

(a) Selection of Material Grade

For craft 61 m and over in length, steel materials are not to be lower grades than those required by Table III 1-1 for the material class given in Table III 1-2 for the particular location.

Table III 1-1
Material Grades

Plate Thickness (t) mm	Material Class		
	I	II	III
t ≤ 15	A, AH	A, AH	A, AH
15 < t ≤ 20	A, AH	A, AH	B, AH
20 < t ≤ 25	A, AH	B, AH	D, DH
25 < t ≤ 30	A, AH	D, DH	D, DH
30 < t ≤ 35	B, AH	D, DH	E, EH
35 < t ≤ 40	B, AH	D, DH	E, EH
40 < t ≤ 100	D, DH	E, EH	E, EH

Table III 1-2
Material Class of Structural Members

Structural Members	Material Class or Grade	
	Within 0.4L Amidships	Outside 0.4L Amidships
Shell		
Bottom plating including keel plate	II	A/AH
Bilge strake	II	A/AH
Side Plating	I	A/AH
Sheer Strake at strength deck[1]	II	A/AH
Decks		
Strength deck plating[2]	II	A/AH
Stringer plate in strength deck[1]	II	A/AH
Strength deck strake on tankers at longitudinal bulkhead	II	A/AH
Strength deck plating within line of hatches and exposed to weather, in general	I	A/AH
Longitudinal Bulkheads		
Lowest strake in single bottom craft	I	A/AH
Uppermost strake including that of the top wing tank	II	A/AH
Other Structures in General		
External continuous longitudinal members and bilge keels	II	A/AH
Plating materials for stern frames supporting rudder and propeller boss, rudders, rudder horns, steering equipment[3], propeller nozzles, and shaft brackets	-	I
Strength members not referred to in above categories and above local structures	A/AH	A/AH

Notes:
(1) A radius gunwale plate may be considered to meet the requirements for both the stringer plate and the sheer strake, provided it extends suitable distances inboard and vertically.
(2) Plating at the corners of large hatch openings are to be specially considered.
(3) Steering equipment components other than rudders, as described in 2.8 of this Part.

(b) Note for the Users

The attention of users is drawn to the fact that when fatigue loading is present, the effective strength of higher- strength steel in a welded construction may not be greater than that of ordinary-strength steel. Precautions against corrosion fatigue to higher strength steel and aluminum alloy materials may also be necessary.

(c) Ships Exposed to Low Air Temperatures

For crafts intended to operate in areas with low air temperatures (below –10°C), the materials in exposed structures to be selected based on the design temperature t_D, are to be taken as defined in 1.2.1(d) of this Chapter.

Materials in the various strength members above the lowest ballast water line (BWL) exposed to air (including the structural members covered by the Note (5) of Table III 1-4 of this Chapter) and materials of cargo tank boundary plating for which 1.2.1(e) of this Chapter is applicable are not to be of lower grades than those corresponding to Classes I, II and III, as given in Table III 1-4 of this Chapter, depending on the categories of structural members (secondary, primary and special). For non-exposed structures (except as indicated in Note 5 of Table III 1-4 of this Chapter) and structures below the lowest ballast water line, see 1.2.1(a) of this Chapter.

Table III 1-3
Application of Material Classes and Grades – Structures Exposed at Low Temperatures

Structural Member Category	Material Class	
	Within 0.4L Amidships	Outside 0.4L Amidships
Secondary	I	I
Deck plating exposed to weather, in general		
Side plating above BWL		
Transverse bulkheads above BWL(5)		
Cargo tank boundary plating exposed to cold cargo (6)		
Primary	II	I
Strength deck plating(1)		
Continuous longitudinal members above strength deck, excluding longitudinal hatch coamings		
Longitudinal bulkhead above BWL(5)		
Top wing tank bulkhead above BWL(5)		
Special	III	II
Sheer strake at strength deck(2)		
Stringer plate in strength deck(2)		
Deck strake at longitudinal bulkhead(3)		
Continuous longitudinal hatch coamings(4)		

Notes:

(1) Plating at corners of large hatch openings to be specially considered. Class III or Grade E/EH to be applied in positions where high local stresses may occur.

(2) Not to be less than Grade E/EH within 0.4L amidships in craft with length exceeding 250 meters.

(3) In craft with breadth exceeding 70 meters at least 3 deck strakes to be Class III.

(4) Not to be less than Grade D/DH.

(5) Applicable to plating attached to hull envelope plating exposed to low air temperature. At least 1 strake is to be considered in the same way as exposed plating and the strake width is to be at least 600 mm.

(6) For cargo tank boundary plating exposed to cold cargo for ships other than liquefied gas carriers, see 1.2.1(e) of this Chapter.

The material grade requirements for hull members of each class depending on thickness and design temperature are defined in Table III 1-4 of this Chapter. For design temperatures $t_D < -55$°C, materials are to be specially considered.

Table III 1-4
Material Grade Requirements for Classes I, II and III at Low Temperatures

Class I

Plate thickness in mm	-11 / -15 ºC		-16 / -25 ºC		-26 / -35 ºC		-36 / -45 ºC		-46 / -55 ºC	
	MS	HT	MS	HT	MS	HT	MS	HT	MS	HT
t ≤ 10	A	AH	A	AH	B	AH	D	DH	D	DH
10 < t ≤ 15	A	AH	B	AH	D	DH	D	DH	D	DH
15 < t ≤ 20	A	AH	B	AH	D	DH	D	DH	E	EH
20 < t ≤ 25	B	AH	D	DH	D	DH	D	DH	E	EH
25 < t ≤ 30	B	AH	D	DH	D	DH	E	EH	E	EH
30 < t ≤ 35	D	DH	D	DH	D	DH	E	EH	E	EH
35 < t ≤ 45	D	DH	D	DH	E	EH	E	EH	∅	FH
45 < t ≤ 50	D	DH	E	EH	E	EH	∅	FH	∅	FH
∅ = Not applicable										

Class II

Plate thickness in mm	-11 / -15 ºC		-16 / -25 ºC		-26 / -35 ºC		-36 / -45 ºC		-46 / -55 ºC	
	MS	HT	MS	HT	MS	HT	MS	HT	MS	HT
t ≤ 10	A	AH	B	AH	D	DH	D	DH	E	EH
10 < t ≤ 20	B	AH	D	DH	D	DH	E	EH	E	EH
20 < t ≤ 30	D	DH	D	DH	E	EH	E	EH	∅	FH
30 < t ≤ 40	D	DH	E	EH	E	EH	∅	FH	∅	FH
40 < t ≤ 45	E	EH	E	EH	∅	FH	∅	FH	∅	∅
45 < t ≤ 50	E	EH	E	EH	∅	FH	∅	FH	∅	∅
∅ = Not applicable										

Class III

Plate thickness in mm	-11 / -15 ºC		-16 / -25 ºC		-26 / -35 ºC		-36 / -45 ºC		-46 / -55 ºC	
	MS	HT	MS	HT	MS	HT	MS	HT	MS	HT
t ≤ 10	B	AH	D	DH	D	DH	E	EH	E	EH
10 < t ≤ 20	D	DH	D	DH	E	EH	E	EH	∅	FH
20 < t ≤ 25	D	DH	E	EH	E	EH	E	FH	∅	FH
25 < t ≤ 30	D	DH	E	EH	E	EH	∅	FH	∅	FH
30 < t ≤ 35	E	EH	E	EH	∅	FH	∅	FH	∅	∅
35 < t ≤ 40	E	EH	E	EH	∅	FH	∅	FH	∅	∅
40 < t ≤ 50	E	EH	∅	FH	∅	FH	∅	∅	∅	∅
∅ = Not applicable										

Single strakes required to be of Class III or of Grade E/EH or FH are to have breadths not less than 800 + 5L mm, maximum 1800 mm.

Plating materials for sternframes, rudder horns, rudders and shaft brackets are not to be of lower grades than those corresponding to the material classes given in 1.2.1(a) of this Chapter

(d) Design Temperature t_D

The design temperature t_D is to be taken as the lowest mean daily average air temperature in the area of operation.

(i) Mean

Statistical mean over observation period

(ii) Average

Average during one day and night

(iii) Lowest

Lowest during year

For seasonally restricted service, the lowest value within the period of operation applies.

For the purpose of issuing a Polar Ship Certificate in accordance with the Polar Code, the design temperature t_D shall be no more than 13°C higher than the Polar Service Temperature (PST) of the craft.

In the Polar Regions, the statistical mean over observation period is to be determined for a period of at least 10 years.

Fig. III 1-1 illustrates the temperature definition.

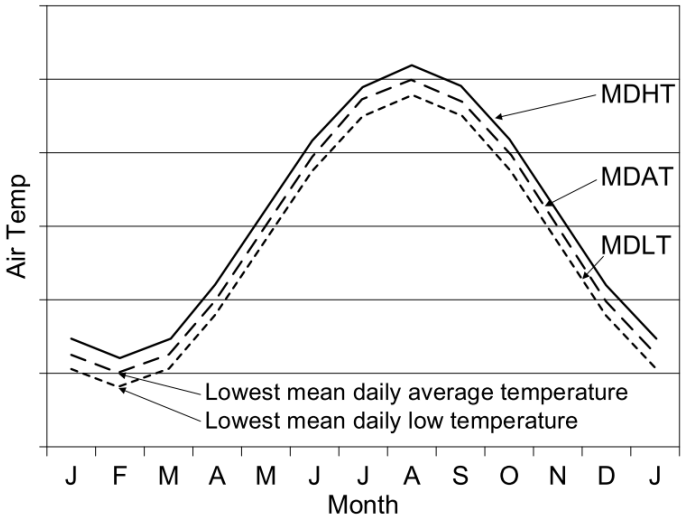

Fig. III 1-1
Commonly Used Definitions of Temperatures

MDHT = Mean Daily High (or maximum) Temperature
MDAT = Mean Daily Average Temperature
MDLT = Mean Daily Low (or minimum) Temperature

(e) Cold cargo for ships other than liquefied gas carriers

For ships other than liquefied gas carriers, intended to be loaded with liquid cargo having a temperature below -10°C, e.g. loading from cold onshore storage tanks during winter conditions, the material grade of cargo tank boundary plating is defined in Table III 1-4 of this Chapter based on the following:

- t_c design minimum cargo temperature in °C
- steel grade corresponding to Class I as given in Table III 1-3 of this Chapter

The design minimum cargo temperature, t_c is to be specified in the loading manual.

1.2.2 Workmanship

All workmanship is to be of commercial marine quality and acceptable to the Surveyor. Welding is to be in accordance with the requirements of Part II of the Rules and Part XII of the Rules for Steel Ships.

1.2.3 Design

(a) Continuity

Care is to be taken to provide structural continuity. Changes in scantlings are to be gradual, such that the maximum angle from horizontal is 45°, see Fig. III 1-2 below. Strength members are not to change direction abruptly, such that the maximum change in direction is 45°, see Fig. III 1-3 below. Where primary structural members terminate at another structural member, tapering of the primary member or tapering brackets may be required beyond the other structural member, as indicated in Fig. III 1-4 below, and as required in 2.5.1. Stanchions and bulkheads are to be aligned to provide support and to minimize eccentric loading. Major

appendages outside the hull and strength bulkheads in superstructures are to be aligned with major structural members within the hull.

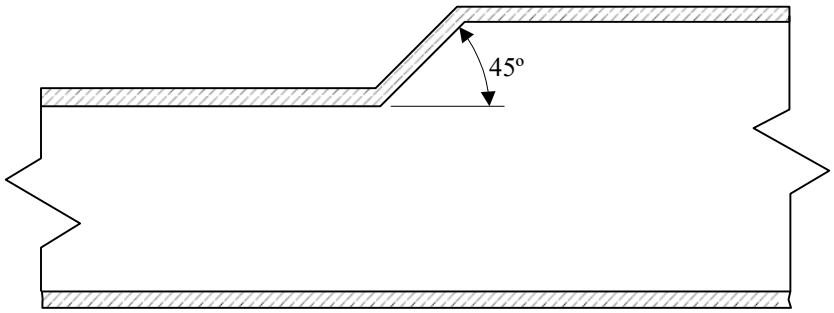

Fig. III 1-2

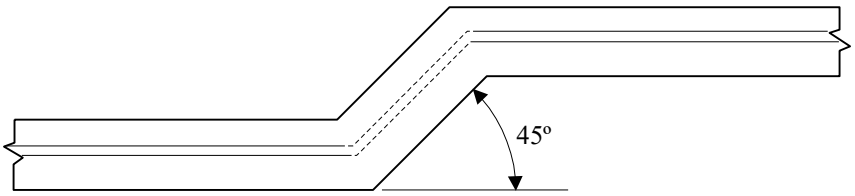

Fig. III 1-3

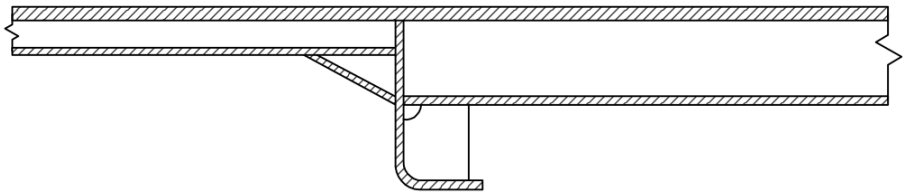

Fig. III 1-4

(b) Openings

The structural arrangements and details are to be in accordance with 2.6 of this Part. In general, major openings such as doors, hatches, and large vent ducts are to be avoided in the hull in close proximity to the gunwale. Corners of openings in strength structures are to have generous radii. Compensation may be required for openings.

(c) Brackets

(i) Steel Brackets

Where brackets are fitted having thicknesses as required by Table III 1-5 of this Chapter and faces at approximately 45 degrees with the bulkhead deck or shell, and the bracket is supported by a bulkhead, deck or shell structural member, the length of each member, *l*, may be measured at a point 25% of the extent of the bracket beyond the toe of the bracket as shown in Fig. III 1-5 below. The minimum overlap of the bracket arm along the stiffener is not to be less than obtained from the following equation:

$x = 1.4y+30$ mm

where

x = length of overlap along stiffener mm

y = depth of stiffener mm

Where a bracket laps a member, the amount of overlap generally is to be 25.5 mm.

(ii) Aluminum Brackets

Aluminum brackets are to comply with above 1.2.3(c)(i), except that the thicknesses shall be in accordance with Table III 1-6 insteads of III 1-5 below.

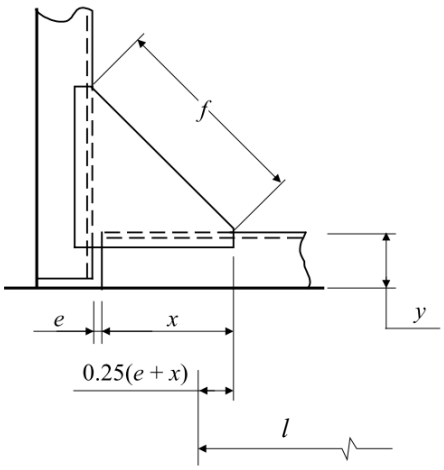

Fig. III 1-5
Bracket

Table III 1-5
Brackets (Steel)

Length of face, *f*, mm	Thickness, mm		Width of Flange, mm
	Plain	Flanged	
$f \leq 305$	5.0	—	—
$305 < f \leq 455$	6.5	5.0	40
$455 < f \leq 660$	8.0	6.5	50
$660 < f \leq 915$	11.0	8.0	65
$915 < f \leq 1370$	14.0	9.5	75

Table III 1-6
Brackets (Aluminum)

Length of face, *f*, mm	Thickness Millimeters, mm		Width of Flange, mm
	Plain	Flanged	
$f \leq 305$	7.0	—	—
$305 < f \leq 455$	9.5	7.0	40
$455 < f \leq 660$	11.5	9.5	50
$660 < f \leq 915$	16.0	11.5	65
$915 < f \leq 1370$	20.0	13.5	75

(d) Structural Design Details

The designer is to give consideration to the following:

(i) The thickness of internals in locations susceptible to rapid corrosion.

(ii) The proportions of built-up members to comply with established standards for buckling strength.

(iii) The design of structural details such as noted below, against the harmful effects of stress concentrations and notches:

(1) Details of the ends, the intersections of members and associated brackets.

(2) Shape and location of air, drainage or lightening holes.

(3) Shape and reinforcement of slots or cutouts for internals.

(4) Elimination or closing of weld scallops in way of butts, "softening" of bracket toes, reducing abrupt changes of section or structural discontinuities.

(iv) Proportions and thickness of structural members to reduce fatigue response due to engine, propeller or wave-induced cyclic stresses, particularly for higher-strength steels.

Standard construction details based on the above considerations are to be indicated on the plans or in a booklet submitted for review and comment.

(e) Termination of Structural Members

Unless permitted elsewhere in the Rules, structural members are to be effectively connected to the adjacent structures in such a manner to avoid hard spots, notches and other harmful stress concentrations. Where members are lightly loaded and not required to be attached at their ends, special attention is to be given to the end taper, by using soft-toed concave brackets or by a sniped end of not more than 30°. Bracket toes or sniped ends are to be kept within 25 mm of the adjacent member and the depth at the toe or snipe end is generally not to exceed 15 mm. Where a strength deck or shell longitudinal terminates without end attachment, it is to extend into the adjacent transversely framed structure or stop at a local transverse member fitted at about one transverse frame space beyond the last floor or web that supports the longitudinal.

1.2.4 Effective Width of Plating

The section modulus and moment of inertia of stiffening members are provided by the member and a portion of the plating to which it is attached. The effective width is as given in the following paragraphs. The section modulus and moment of inertia of a shape, bar, fabricated section, or laid-up member not attached to plating is that of the member only.

(a) FRP Laminates

Where the plating is an FRP single-skin laminate, the maximum effective width of plating for floors, frames, beams and bulkhead stiffeners is not to exceed either the stiffening member spacing or the width obtained from the following equation, whichever is less. See Fig. III 1-6 below.

$$w = 18t + b$$

where:

w	=	effective width of plating	mm
t	=	thickness of single skin plating	mm
b	=	net width of stiffening member, but not more than 18t	mm

Where the plating is an FRP sandwich laminate with a flexurally and compressively ineffective (balsa, cross linked PVC, or linear polymer core, t in the above equation is the thickness of a single skin laminate having the same moment of inertia per unit width as the two skins of the sandwich about the neutral axis of the sandwich, excluding the core.

For a stiffening member along an opening, the maximum effective width of plating is equal to either one-half the stiffening member spacing or the width obtained from the following equation, whichever is less.

$$w = 9t + b$$

where w, t and b are as defined above.

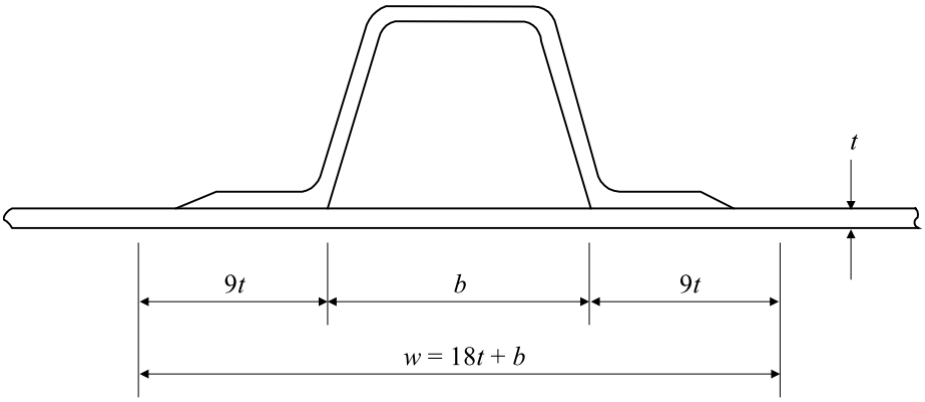

Fig. III 1-6
Effective Width of FRP Plating

(b) Steel and Aluminum Plating

(i) Primary structural Members

The effective width of plating for deep supporting members is equal to the lesser of either one half the sum of spacing on each side of the member, 0.33 time the unsupported span, *l*, or 750 mm. For girders and webs along hatch openings, the effective width of plating is to be half of that obtained from the above. Due account is to be taken in regards to plate buckling, see 2.3.1(a) of this Part.

(ii) All Other Structural Members

The maximum effective width of plating is equal to either one-half the sum of spacing on each side of the member or the width obtained from the following equation, whichever is less.

Steel Members w = 80t

Aluminum Members w = 60t

where:

w	=	effective width of plating	mm
t	=	thickness of plating	mm

For a stiffening member along an opening, the maximum effective width of plating is one-half of the effective width given above.

1.3 Direct Analysis Methods

1.3.1 General

This Section states requirements for a variety of direct analysis methods that can be used in lieu of or in conjunction with the specific requirements given in 2.1, 2.2, 2.3 and 2.4 of this Part.

1.3.2 Loading Conditions

(a) General

The loading conditions considered are to include all intended operational conditions of the craft as specified by the Designer. These operating conditions are to be defined by significant wave height, wave period, and maximum operating speed. Table III 1-7 below is to be used when the significant wave height is given in terms of Sea States. When the wave period is not given, the most probable modal period is to be used in the analysis.

Table III 1-7
Sea States

Sea State	Significant Wave Height m
0-1	0.10
2	0.50
3	1.25
4	2.5
5	4
6	6
7	9
8	14
>8	>14

(b) Environmental and Service Conditions

(i) General

The environmental condition is anticipated to be described by appropriate sets of wave data. The sources and reliability of this data are to be submitted. The wave parameters used in the analysis are to be selected and documented based on the conditions given in the craft specification. If these parameters are to be used in conjunction with the requirements in 1.3.2(c), 1.3.3(b), 1.3.4(a)(ii), 1.3.4(b), 1.3.5(a), 1.3.5(b)(iii) and 1.3.6(b) of this Chapter, then they are to be compatible with the stochastic response and extreme value prediction methods.

(ii) Types of Wave Spectra

(1) Deep-water Ocean Waves
Two-parameter spectra, such as the Bretschneider or P-M wave spectral formulations, are to be used. If the swell and wave components are known to interact, a bi-modal Ochi-Hubble spectrum is to be used. Directional spreading appropriate to coastal conditions is also to be applied.

(2) Shallow-Water Waves
Wave conditions that include the effects of bathymetry, wind field, coastal contours of the region are to be used. For fetch-limited sea conditions, JONSWAP spectrum or a modified version of the spectrum is to be used.

(c) Loading Conditions for Direct Analysis

(i) Dominant Load Parameters

A list of Dominant Load Parameters (DLP) is to be developed. This will include select motion and load effect parameters. Other loads, such as those due to wave impacts on the bow and stern, flare and bottom slamming, wet-deck slamming (multi-hulls) and vibration effects on local structural strength, have to be treated separately. Considerations for slamming analysis are given in 1.3.2(c)(vii) of this Chapter.

(ii) Load Cases

Load cases are defined by a combination of craft loading conditions, a set of global motion and load effect parameters set forth in terms of each of the DLPs, other load components accompanying the DLPs and an equivalent wave system for the specified DLP. Justification for load cases selected for use in the structural analysis is to be submitted to the Society for review.

(iii) Analyses of Ship Motions, Wave Loads, and Extreme Values

Calculations are to be made using the spectral analysis-based approach, which by definition relies on the use of Response Amplitude Operators (RAOs). Each RAO is to be calculated for regular waves of unit amplitude for a range of wave frequencies and wave headings that will be given below.

(iv) Essential Features of Spectral Analysis of Motions and Loads

(1) General Modeling Considerations
The model of the hull is to include the masses of all equipment, vehicles and supporting structure. There is also to be sufficient compatibility between the hydrodynamic and structural models so that the application of fluid pressures onto the finite element mesh of the structural model can be done appropriately.

For the load component types and structural responses of primary interest, software formulations derived from linear idealizations are deemed to be sufficient. The capabilities and limitations of the software are to be known, and in cases where the software is not known to the Society, it may be necessary to demonstrate the adequacy of the software.

(2) Diffraction-Radiation Methods
Computations of the wave-induced motions and loads are to be carried out through the application of seakeeping analysis codes utilizing three-dimensional potential flow based diffraction-radiation theory. Computation of the hydrodynamic pressures is to take account of, as a minimum, all six degree-of-freedom rigid-body motions of the hull. These codes may be based either on linear (small) wave and motion amplitude assumptions or nonlinear (large) amplitude motion and wave formulations.

(3) Panel Model Development
The Rankine source panel method is recommended for solving the hydrodynamic boundary value problem.

(4) Motion and Load-Effect Response Amplitude Operators
For each loading condition, RAOs of all the selected DLPs are to be calculated. The RAOs are to represent the pertinent range of wave headings (β), in increments not exceeding 15 degrees. A range of wave frequencies is to be considered based on the route-specific wave conditions (see 1.3.2(b) of this Chapter). The nominal range is 0.2 rad/s to 1.8 rad/s in increments of 0.05 rad/s.

The worst frequency-heading (ω, β) combination is to be determined from an examination of the RAOs for each DLP. Only the heading β_{max} and the wave frequency ω_e at which the RAO of the DLP is a maximum, need to be used in dynamic load approach or direct analysis.

(v) Extreme Values Analysis

Extreme value analysis is to be performed for each DLP to determine the maximum values. An extreme value method that follows the so-called long-term approach is to be used. The use of a validated short-term extreme value approach, which is appropriate to the craft type and route-specific environmental data, will also be considered. The supplementary use of such a short-term approach to confirm or test the sensitivity of the long-term based design values is recommended.

The relevant value to be obtained from the long-term response analysis is the most probable extreme value (MPEV) having a probability of level of 10^{-8} in terms of wave encounters.

(vi) Equivalent Wave

For each load case, an equivalent wave is to be determined which simulates the magnitude and location of the extreme value of the dominant load component of the load case.

The amplitude of the equivalent wave is to be determined using the extreme values of the DLP (see 1.3.2(c)(iv) of this Chapter) and the RAO of that DLP occurring at the wave frequency and wave heading corresponding to the maximum amplitude (peak) of the RAO. The amplitude of the equivalent wave is given by:

$$a_{wj} = MPEV_j / Max\ RAO_j$$

where

a_{wj}	=	wave amplitude
$MPEV_j$	=	Most Probable Extreme Value of the jth DLP at a probability level equivalent to the design criterion
$Max\ RAO_j$	=	maximum amplitude of the jth DLP's RAO

(vii) Slamming Loads

Loads due to slamming and wave impact on craft hulls are categorized into global slamming effects and local slam-induced structural response.

(1) Global Slamming Effects
The simplified formulae given in 2.1 of this Part may be used to account for global slamming effects in the preliminary design stage. For detailed analysis, a direct time-domain simulation involving short-term predictions are to be used for the global strength assessment of monohulls. In most cases involving high speeds, the absolute motions or relative motions will be of such

large amplitude that nonlinear calculations will be required. In catamarans, wet deck slam-induced global whipping effects of the hull is to be assessed using methods that account for coupling of the symmetric and anti-symmetric modes of responses. These calculations will require time-domain analysis methods.

(2) Local Impact Loads
Panel structures with horizontal flat or nearly flat surfaces such as a wet deck of a multi-hull craft will need to be hydroelastically modeled, where in the dynamics of the fluid and the elastic response of the plate and stiffeners are simultaneously modeled.

1.3.3 Motion Predictions

(a) Model Testing

Craft hull motions and accelerations obtained from scale model tests may be used to validate motions predicted by computer programs. Model testing is required to be performed and reported to the Society when loads are being submitted in lieu of the loads determined in 2.2 of this Part or other loads determined by the Society. The model is to accurately represent the structure that is to be built in both principal particulars and hull geometry.

(i) Testing Program

The model is to be tested over a range of speeds, headings, and wave characteristics (height, length, and period), as indicated by the Society. When this is not specified, the testing program is to include the following:

(1) Speeds
The model is to be tested at the minimum speed required by this Soceity and the maximum achievable speed of the craft for a particular wave profile and heading.

(2) Headings
The model is to be tested in head, beam, quartering, and following seas.

(3) Wave Parameters
The model is to be tested in both deep water and shallow water wave conditions. These are defined in 1.3.2(b)(ii) of this Chapter. For craft that are limited to operation in coastal regions (Coastal Craft and Riverine Craft), deep water wave profile testing is not required.

(ii) Model Measurements and Reporting

The parameters listed below are to be measured and reported based on the model test program. Some of the parameters listed may be derived through statistical analysis of measured data obtained from testing. When statistical analysis is used, the methods of analysis employed are to be indicated in the report.

(1) Vertical or Heave Acceleration
The significant, 1/10 highest, or 1/100 highest vertical acceleration at the longitudinal center of gravity, bow, and stern are to be reported. The accelerometer is to be adjusted such that the acceleration due to gravity is not measured. The 1/100 highest vertical acceleration at the longitudinal center of gravity may be used in place of n_{cg} in 2.2.1 and 2.2.2 of this Part.

(2) Roll Acceleration
The significant roll acceleration about a longitudinal axis through the center of gravity and the maximum roll angle are to be reported.

(3) Pitch Angle and Acceleration
The significant coupled pitch-and-heave acceleration at the bow and the stern and the maximum pitch angle are to be reported.

(b) Accelerations from Direct Analysis

(i) General

The wave-induced craft motions may be determined by direct analysis. When this analysis is not performed by the Society, it is to be verified by model testing as indicated in 1.3.3(a) of this Chapter.

(ii) Global Accelerations

Global accelerations are to be determined using the loading conditions indicated in 1.3.2(c) of this Chapter. The 1/100 highest vertical (heave) acceleration at the longitudinal center of gravity may be used in place of n_{cg} in 2.1 and 2.2 of this Part.

(iii) Local Accelerations

Local accelerations at points where the lightship weight of the structure, (non-liquid cargo), are located, including deck-mounted equipment, are to be calculated to determine the inertia loads. For vehicle decks, wheel loading is to be applied. An evenly distributed load equivalent to the weight of the vehicles may be used. The acceleration RAO at a location of interest is to be calculated to account for all translational and rotational components of motions.

The components of the gravitational acceleration in the craft's coordinate system are to be included.

1.3.4 Load Predictions

(a) Global Loads

As a minimum, the still-water hogging and sagging moments and shear forces, the wave-induced hogging and sagging moments and shear forces and the slam-induced moments and shear force, are to be determined for monohull craft. Multi-hulled craft are to have the transverse bending moment, the torsional (or pitch connecting) moment and the transverse shear force determined in addition to the moments and shear forces determined for monohull craft. These loads are to be reported so that they can be used in conjunction with the requirements in 1.3.5 of this Chapter or 2.1 of this Part.

(i) Computation of Global Load Effects

(1) Still-water Bending Moment and Shear Force
The still-water bending moments and shear forces are to be calculated in the light load, half load, and full load conditions. The light load condition consists of all components of the craft (structure, machinery, piping equipment, outfitting, wiring, interiors, paint, etc.) plus 10% of tank and cargo capacity. The half load condition is to include all components of the craft plus 50% of the tank and cargo capacity. The full load condition consists of all components of the craft plus 100% of the tank and cargo capacity. The distribution of the load is to capture all major weight discontinuities, and no single weight distribution segment is to be greater than 0.20L.

(2) Wave-Induced Longitudinal Bending Moment and Shear Force
The wave-induced bending moments and shear forces can be determined by using the environmental conditions outlined in 1.3.2(b) of this Chapter.

(3) Transverse Bending Moment and Shear Force – Multi-hulled Craft
The transverse bending moment and shear force may be determined by distributing the weights and loads athwartships across the craft and using the environmental conditions outlined in 1.3.2(b) of this Chapter.

(4) Torsion Bending Moment
The torsional bending moment may be determined by distributing the weights and loads on segments of the hull sliced at a 45° angle from centerline and using the environmental conditions outlined in 1.3.2(b) of this Chapter.

(5) Slamming Induced Bending Moment and Shear Force
The slam induced bending moment and shear force may be calculated by applying the acceleration determined in 1.3.3 of this Chapter or in 2.2.1 of this Part to the lumped masses developed for 1.3.4(b)(iii) of this Chapter.

(ii) Global Loads from Computations

Global loads from computer software programs are to be developed by loading the structure as outlined 1.3.2(c) of this Chapter. The computer program is to be capable of determining the moments and shear forces in 1.3.4(a) of this Chapter or developing loads that can be used in conjunction with finite element methods as outlined in 1.3.5(a) of this Chapter.

(b) Local Loads

Loads that differ from the pressure loads developed in 2.2 of this Part may be used to determine the required scantlings in conjunction with the requirements in 1.3.5(b) of this Chapter or 2.3 and 2.4 of this Part. These

loads are to be developed under the loading conditions in 1.3.2 of this Chapter and the following subparagraphs.

(i) External Hydrodynamic Pressure

The hydrodynamic pressures at selected points on the external contours of the hull sections, are to be calculated in regular waves.

(1) External Pressure Components
The total hydrodynamic pressure is to include the pressure components due to waves and the components due to craft motion. Components of the hydrodynamic pressure are to be calculated from the panel model analysis of 1.3.2(c)(iii) of this Chapter.

(2) Pressures Accompanying the Dominant Load Parameter and their Distribution
The external pressure is to be calculated either as a complex number or in terms of the amplitude and phase. Then, 'simultaneously' acting pressures over the wetted surface can be represented in the form:

$$P = (A)(a_w)\sin(\omega_e t + \varepsilon_I)$$

where

P	=	simultaneous pressure
A	=	amplitude of the pressure RAO
a_w	=	equivalent wave amplitude
ω_e	=	frequency of the equivalent wave when the RAO of the dominant load component of the load case reaches its maximum
t	=	time under consideration
ε_I	=	phase angle of the (other) load component's RAO

(3) Pressure Loading for Finite Element Models
The hydrodynamic pressure can be linearly interpolated to obtain the nodal pressures for the finite element models required for structural analysis.

(4) Pressure Loading for Rule Requirements
For pressures that are to be used in conjunction with the requirements in 2.3 and 2.4 of this Part for determining the local scantlings, the hydrodynamic pressures are to be resolved into kN/m^2.

(ii) Internal Tank Pressure

Liquid pressures in the cargo tanks are to be calculated and applied to the structural model used in finite element analysis. Both static and dynamic pressures are to be included in the analysis, assuming that there is no relative motion between the tank and the contained fluid.

(1) Pressure Components
The internal tank pressure is to account for both the quasi-static and motion-induced (dynamic) pressure components. The quasi-static component results from gravity and is to include craft roll and pitch rotations. The dynamic component is to be developed from the accelerations in the liquid at the tank boundary caused by the hull's motions in six degrees of freedom. These are to be obtained from motion analysis as specified in 1.3.2 of this Chapter.
The total instantaneous internal tank pressure for each of the tank boundary points is to be calculated by combining the inertial and quasi-static components as follows:

$$p = p_o + \rho h_t[(g_x + a_x)^2 + (g_y + a_y)^2 + (g_z + a_z)^2]^{1/2}$$

where

p	=	total instantaneous internal tank pressure at a tank boundary point
p_o	=	vapor pressure or the relief valve pressure setting
ρ	=	fluid density, cargo or ballast
h_t	=	total pressure head defined by the height of the projected fluid column in the direction of the total instantaneous acceleration vector
$a_{x,y,z}$	=	longitudinal, lateral, and vertical wave-induced accelerations relative to the craft's axis system at a point on a tank's boundary

$g_{x,y,z}$ = longitudinal, lateral, and vertical components of gravitational accelerations relative to the craft's axis system at a tank boundary point

(2) Roll and Pitch Motions
The influence of ship motions on tank pressures is to be taken into account using the maximum pitch and roll angles. As reflected in the previous formulations, the inclination of the tank due to craft roll and pitch is to be considered in the calculation of the hydrostatic pressure. The direction of gravitational forces in the ship-fixed coordinate system varies with roll and pitch, resulting in a change in pressure head and a corresponding change in the static pressure.

(3) Simultaneously Acting Tank Pressure
At each wave condition, for each load case described in 1.3.2(c) of this Chapter, simultaneously acting tank pressures (quasi-static and dynamic) are to be calculated. Each wave condition is defined by wave amplitude, frequency, heading angle and wave crest position, as explained in 1.3.2(c) of this Chapter. Using the wave amplitude and phase angle determined based on the RAO of a DLP, the simultaneously acting tank pressure is to be calculated for the instant when the maximum value of the DLP occurs. These internal tank pressures are to be used in the structural finite element model.

(iii) Inertia Force of Lumped Structural Mass

The inertia force, or point load, of a structural mass, such as deck equipment or cargo, can be determined by the following equation:

$$F = m(A_t)$$

where:

F = inertial load of the item
m = mass of the lumped weight of the structural member
A_t = amplitude of the acceleration RAO

For finite element models, the inertia forces in three (global) directions are to be calculated and applied. For a first-principles analysis, the inertia force in the vertical direction is to be calculated and applied.

1.3.5 Structural Response

(a) Global Response

The global bending moments developed in 1.3.4(a) of this Chapter can either be applied to the requirements in 2.1.1(a)(ii)(5), 2.1.1(c), 2.1.1(e)(iv) and 2.1.2(c) of this Part or to a global finite element model as outlined in this paragraph.

(i) General

The load cases of 1.3.2(c) of this Chapter are to be applied to the global structural analysis model described in 1.3.5(a)(iv) of this Chapter. Each load case is to include the hydrostatic and still-water load components that have not otherwise been directly included in the load component determination performed in accordance with 1.3.4(b)(i) and 1.3.4(b)(iii) of this Chapter. These hydrostatic or still-water load components are to be included in the hydrostatics analysis.

(ii) Equilibrium Check

The model of the hull girder structure is to be close to equilibrium when all the loads (static and dynamic) are applied.

The unbalanced forces in the model's global axis system for each load case need to be determined and resolved. The magnitudes of the unbalanced forces, and the procedure used to balance the structural model in equilibrium is to be fully documented.

(iii) General Modeling Considerations

To the maximum extent practicable, the overall model of the hull structure is to comprise the entire hull. There is also to be sufficient compatibility between the hydrodynamic and structural models so that the

application of fluid pressures onto the finite element mesh of the structural model can be done appropriately.

For the load component types and structural responses of primary interest, analysis software formulations derived from linear idealizations are sufficient. Enhanced bases of analysis may be required so that non-linear loads, such as hull slamming, may be required. The adequacy of the selected software is to be demonstrated to the satisfaction of the Society.

The results of overall (global) model analysis are to be directly employed in the creation and analysis of the required finer mesh, local structural models. Appropriate boundary conditions determined in the larger scale model are to be imposed onto the local models for appropriate structural continuity and load transfer between the various levels of models.

(iv) Analysis of the Global Hull Structure

The global structural and load model is to be as detailed and complete as possible. The stress results of the global model are used only to assess the hull girder plating of the deck (and wet deck for multi-hulled craft), side shell, bottom, inner bottom, longitudinal bulkheads, transverse bulkheads and stools or deck box girders. The main supporting members of the hull girder may be evaluated using 2-D fine-mesh local models. In developing the 3-D global finite element model, the following requirements apply:

(1) The finite element model is to include all primary load-carrying members. Secondary structural members which may affect the overall load distribution are also to be included.

(2) Structural idealization is to be based on the stiffness and anticipated response of the structure, not wholly on the geometry of the structure itself.

(3) The relative stiffness between associated structural members and their anticipated response under the specified loading is to be considered.

(4) A judicious selection of nodes, elements, and degrees of freedom is to be made to represent the stiffness and mass properties of the hull, while keeping the size of the model and required data generation within manageable limits. Lumping of plating stiffeners, use of equivalent plate thickness, and other techniques may be used for this purpose.

(5) The finite elements, whose geometry, configuration, and stiffness closely approximate the actual structure, can typically be of three types:

- Truss or bar elements with axial stiffness only
- Beam elements with axial, shear, and bending stiffness
- Membrane plate elements, either triangular or quadrilateral.

(6) When possible, the finite element structure is to be based on the use of gross or as-built scantlings.

(b) Local Response

The local loads developed in 1.3.4(b) of this Chapter may be used in conjunction with the scantling requirements in 2.3 and 2.4 of this Part. For local structure that forms a grillage, or that is arranged in a manner not indicative of the principles given in the other Sections of the Rules, or structure that is being examined in conjunction with a finite element analysis may be reviewed using the following:

(i) Non-Prismatic Beam Analysis

Beams that do not have uniform cross-sections may be analyzed using a non-prismatic beam program. The adequacy of the selected software is to be demonstrated to the satisfaction of the Society. In developing the non-prismatic beam model, the following requirements apply:

(1) The program is to be capable of calculating the shear and bending moment at all locations along the length of the beam.

(2) Section properties of the beam are to be inputted into the program to resemble the actual construction of the beam and are to have a maximum segment length of 300 mm.

(3) The loads for the beam may be derived from 2.2 of this Part or 1.3.4 of this Chapter.

(4) The boundary conditions of the beam are to reflect the structural arrangement.

(ii) Grillage or Plane Frame Analysis

Structure that forms a grillage, or an area of structure that is arranged in a manner that is different from the principles of the Rules, may be analyzed using a grillage or plane frame analysis program. The

adequacy of the selected software is to be demonstrated to the satisfaction of the Society. In developing the grillage or plane frame model, the following requirements apply:

(1) The beam elements in the model are to be arranged to reflect all of the structure in the area under consideration.

(2) The program is to be capable of applying off-axis loads to the elements and nodes.

(3) The program is to be capable of calculating and reporting the bending moments and shear forces at each node.

(4) The loads for the model may be derived from 2.2 of this Part or 1.3.4 of this Chapter.

(5) The boundary conditions of the model are to reflect the structural arrangement. Boundary conditions for model symmetry will be specially considered.

(iii) Local Fine Mesh Model from Global 3-D Model

Detailed local stresses are to be determined by fine mesh FEM analysis of local structures, based on the results of the global 3-D analysis.

The requirements for developing the 3-D coarse mesh global model in 1.3.5(b)(iv) of this Chapter are also applicable to the development of the 2-D fine-mesh models. In developing the 2-D fine mesh model, the following requirements apply:

(1) The mesh size of the 2-D finite element model are to be determined by adequately modeling the stiffness of the individual structural members forming the local structure.

(2) In modeling a local transverse structure, the web plating is modeled by membrane plates, using both quadrilateral and triangular elements. Stiffeners on the web plating, such as panel breakers, tripping brackets, flat bar stiffeners, etc., and the face plates of the webs are modeled by rod elements of equivalent cross sectional areas. Where face plates on brackets are tapered at the ends, the area of the rod elements is to be reduced accordingly. The out-of-plane hull girder plating (i.e., deck, side shell, bottom shell, girders, etc.) is also to be modeled by rod elements, using an appropriate effective width.

(3) The mesh size used is to be adequate to represent the overall stiffness of the considered local structure as a whole, such that smooth stress distributions in the structure can be obtained.

(4) Finer meshes are to be used in the probable high stressed areas in order to obtain more accurate stress distributions for these areas. The use of a uniform mesh with smooth transition and with avoidance to abrupt changes in mesh sizes is recommended.

(5) In laying out the mesh, the shapes of membrane elements created are to be as regular as possible. The aspect ratios of plate elements are to be kept within 2:1. Elements with an aspect ratio higher than 5:1 may be used for convenience of modeling in way of low stress areas, or areas of low interest.

(6) The grid line spacing and element sizes for the transverse section can be determined by the spacing of the longitudinals on the bottom shell, inner bottom, and topside tank. The grid lines can either be in line with the longitudinals, or for a finer mesh, an additional one division can be added between the longitudinal spacing.

(7) Cutout openings for longitudinals and access holes need not be considered in the 2-D models. This is also applies to all lightening holes or other small openings in the webs.

(8) The stiffeners, panel breakers, and ribs that prevent local buckling that are parallel to the principal direction of stress are to be included in the model.

Boundary displacements obtained from the 3-D global analysis are to be used as boundary conditions in the fine mesh analysis. As applicable, the fine mesh models are to include at least the following local structures:

- A number of transverse web frames
- Centerline longitudinal girder
- Side longitudinal girder
- Horizontal stringers of watertight transverse bulkhead
- Other areas of high stress indicated from the 3-D global analysis.

Where the 3-D global analysis is not comprehensive enough to determine adequately the total stress in the longitudinal plating (e.g., deck and shell) and transverse bulkhead plating of the craft, additional

analyses may be required. Such analyses may not require the performance of fine mesh FEM analysis, where the needed results can be provided by another acceptable method.

(iv) Local Fine Mesh Model without Global 3-D Model

Structure that forms a grillage or an area of structure that is arranged in a manner different from the principles of the Rules may be analyzed using a local finite element model. The adequacy of the selected software is to be demonstrated to the satisfaction of the Society. In developing the local finite element model, the following requirements apply:

(1) The requirements in 1.3.5(b)(iv) of this Chapter are to be applied as applicable.

(2) The loads for the model may be derived from 2.2 of this Part or 1.3.4 of this Chapter.

(3) The boundary conditions of the model are to reflect the structural arrangement. Boundary conditions that model symmetry will be specially considered.

1.3.6 Structral Acceptability

(a) Beam, Grillage, or Plane Frame Analysis

The allowable bending stress for elements in beam, grillage or plane frame models is given in Table III 2-15 or Table III 2-16 of this Part. The allowable shear stress for aluminum and steel elements is $0.5\tau_y$ ($0.75\tau_y$ for bottom primary structures) where τ_y is the minimum shear yield strength of the material. For aluminum structure, τ_y is to be in the welded condition. The allowable shear stress for composite members is $0.4\tau_u$, where τ_u is the lesser of the ultimate shear strength in either the warp or fill of the web laminate.

(b) Finite Element Analysis

(i) General

The adequacy of the finite element analysis results is to be assessed for the failure modes of material yielding and buckling. The requirements in this chapter are for steel, aluminum and FRP craft. The acceptance criteria for craft constructed of other materials will be specially considered.

(ii) Yielding

For a plate element subjected to biaxial stress, a specific combination of stress components, rather than a single maximum normal stress component constitutes the limiting condition. In this regard, the total equivalent stress is to be based on the Hencky von-Mises criterion as the following equation:

$$\sigma_e = \sqrt{\sigma_x^2 + \sigma_y^2 - \sigma_x\sigma_y + 3\tau_{xy}^2}$$

where:

σ_x = normal stress in the x coordinate direction of the element
σ_y = normal stress in the y coordinate direction of the element
τ_{xy} = in-plane shearing stress

The total equivalent stress (Hencky von-Mises stress) is to be less than or equal to the following design stress:

Steel: $0.95\sigma_{yield}$

Aluminum: $0.85\sigma_{yield}$

FRP: $0.37\sigma_u$

where σ_{yield} is the yield strength for steel structures or the welded yield strength for aluminum structure, and σ_u is the ultimate tensile or compressive strength of the laminate, whichever is less.

Component stresses (σ_x, σ_y, τ_{xy}) are to be less than or equal to allowable local structure design stress.

(iii) Design Global Hull Girder Stresses

The design stresses are as follows:

(1) Global Longitudinal Strength of All Hull Types

σ_a = 175 /CQ design longitudinal bending stress N/mm^2

τ_a = 110/Q design shear stress N/mm^2

C = 1.0 for steel craft
= 0.90 for aluminum craft
= 0.80 for fiber-reinforced plastic craft

Q for steel:
= 1.0 for ordinary strength steel
= 0.78 for grade H32 steel
= 0.72 for grade H36 steel

Q for aluminum:
= $0.9 + q_5$ but not less than Q_o

q_5 = $115/\sigma_y$

Q_o = $635/(\sigma_y+\sigma_u)$

σ_y = minimum yield strength of unwelded aluminum (not to be greater than $0.7\sigma_u$) N/mm^2

σ_u = minimum ultimate strength of welded aluminum N/mm^2

Q for fiber-reinforced plastic:
= $400/0.75\sigma_u$

σ_u = minimum ultimate tensile or compressive strength, whichever is less, verified by approved test results. Strength properties in the longitudinal direction of the craft are to be used. N/mm^2

(2) Global Transverse Strength of Multihulls

σ_a = design transverse bending stress, $0.66\sigma_y$ for aluminum and steel craft and $0.33\sigma_u$ for FRP craft N/mm^2

σ_{ab} = design torsional or combined stress，$0.75\sigma_y$ for aluminum and steel craft and $0.367\sigma_u$ for FRP craft N/mm^2

τ_a = design transverse shear stress, $0.38\sigma_y$ for aluminum and steel craft and $0.40\tau_u$ for FRP craft N/mm^2

σ_y = minimum yield strength of the material. For aluminum the yield strength is to be for the unwelded condition and not to be greater than $0.7\sigma_{uw}$ N/mm^2

σ_u = minimum tensile or compressive strength, whichever is less N/mm^2

σ_{uw} = ultimate tensile strength of material in the welded condition N/mm^2

δ_m = maximum deflection for FRP craft, $(\sigma_a/E)L_I$ m

τ_u = minimum ultimate through thickness shear strength N/mm^2

L_I = mean span of cross structure, as indicated in Fig. III A2-2 of this Part cm

E = tensile or compressive modulus of the FRP laminate, whichever is lesser N/mm^2

1.4 Guidelines for Finite Element Analysis

1.4.1 General

The intent of this section is to provide guidance on the use on fine element methods (FEM) for evaluating linear response of hull structural components, equipment foundations and reinforcement structure to applied loads.

Finite element methods can be applied with varying level of detail and complexity to determine stress levels, deflection magnitudes and other parameters of structural components. The choice of the type of finite element and evaluation criteria should match the desired level of detail, loading scenario, boundary conditions and complexity of the structural component.

1.4.2 Structural Modeling

(a) Finite Element Types

The choice of the type of finite element is guided by the complexity of the structural system or component being analyzed, the level of detail desired and the outcomes measured. Two node line element and three or four membrane/plate element are considered sufficient for representation of a structure and requirements in this section assumes the use of such element types in the models. Higher order elements may also be applied. Details of basic element types are given in Table III 1-8 of this Chapter.

Table III 1-8
Finite Element Type

Rod (or truss) element	Line element with axial stiffness only and constant cross-sectional area along length of the element
Beam element	Line element with axial, torsional and bi-directional shear and bending stiffness and with constant properties along the length of the element
Membrane (or plane-stress) element	Plate element with in-plane stiffness and with constant thickness
Shell (or bending plate) element	Plate element with in-plane and out-of-plane bending stiffness and with constant thickness

(b) Model Types

(i) Beam/Grillage Model

Beam/grillage models comprise of entirely of beam and rod elements, and are suitable for the solution of simple to more elaborate beam problems of one, two or three-dimensional configuration.

Examples where such models could be applied are for deck beams, girders, floors, and bulkhead stiffening. Such models provide bending moment and shear force distributions, axial, bending and shear stresses, and deflection magnitudes.

(ii) Plate Element Model

Plate element models are applied in cases where a precise representation of the geometry of the structural component or system is necessary, the complexity of the structure warrants it, or when the desired structural response cannot be determined from beam or grillage models.

(c) Modeling Guidance

(i) The model should include, as applicable, all primary load-carrying members of the structure being analyzed. Secondary structural members that may significantly affect load distributions and local response of the primary members may also be appropriately included in the model.

(ii) For beam elements, cross sectional properties are to be based on that of effective width of the attached plating. The effective width of plating of beam elements is not to exceed the sum of one-half of the spacing on either side of the structural member or 1/3 of the unsupported span of the member, whichever is less.

(iii) Plate element meshing is to follow the stiffening system as far as practicable. The mesh size used should be adequate to represent the overall stiffness of the considered structure. For meshing of large systems such as deck, shell or bulkhead plate/framing systems, the mesh size is to not exceed the spacing between the frames. The mesh should be progressively and smoothly refined to capture structural details where important or found necessary.

(iv) At least three elements are to be used, where practical, to model webs of primary supporting members such as girders, transverses, stringers and floors. Rod elements may be used to model flanges of primary supporting members and brackets. The cross sectional area of rods representing sniped or tapered flanges is to be considered proportionally using an average area over the length of the element.

(v) The aspect ratio of plate elements, in general, is not to exceed three. The use of triangular plate elements is to be kept to a minimum.

(vi) Shell elements are to be used for plate elements subjected to lateral loading.

(d) Boundary Conditions

Boundary conditions applied are to reflect, as closely as possible, the actual support conditions of the structure.

The extent of model should be sufficient to establish proper boundary conditions. Where the model has been extended to points well away from the areas of interest within the model, boundary conditions may be reasonably simplified, for example assuming fully fixed conditions for plate elements models.

(e) Loads

Loads applied on a model are to be as required by the relevant rule or the design loads of the structural member, whichever is greater.

In addition to static loads, other loads such as hull girder and dynamic loads arising out of acceleration, ship motion, etc. are to be considered where applicable and relevant.

In typical cases, it is not necessary to consider the self weight of the structure, unless it is expected to be a significant component of the loads acting on the structure.

Loads are to be applied in a manner so as to match, as closely as possible, the expected distribution and manifestation of the load within the structure in the actual situation.

(f) Stress Criteria

Unless otherwise specified in the Rules or relevant regulations, individual stress components and, as applicable, direct combinations of such stresses in beam or grillage models are not to exceed the allowable stress F.

$F = F_y / FS$

where

F_y = specified minimum yield strength of the material

FS = Factor of Safety

For static loadings:

= 1.67 for axial or bending stress

= 2.50 for shear stress

For loads combining static and dynamic:

= 1.25 for axial or bending stress

= 1.88 for shear stress

For plate element models, and unless otherwise specified in the Rules or relevant regulations, the Von-Mises equivalent stress is not to exceed the limits specified in Table III 1-9 of this Chapter for the specific mesh size.

Table III 1-9
Stress Limits for Plate Element Models

Mesh Size	Stress Limit
1 × stiffener spacing (SS)	0.90 S_mF_y
1/2 × SS	0.95 S_mF_y
1/3 × SS	1.00 S_mF_y
1/4 × SS	1.06 S_mF_y
1/5 × SS ~ 1/10 × SS(1)	1.12 S_mF_y

Note:

(1) Stress limits greater than 1.00 S_mF_y are to be restricted to small areas in way of structural discontinuities.

(2) S_m = 1.0 for mild steel
= 0.95 for HT 32
= 0.908 for HT 36

(3) For intermediate mesh size, the stress limit may be obtained by linear interpretation

(4) For longitudinally effective structure that is modeled without the hull girder loads, the allowable stresses are to be decreased by 10%

Chapter 2

Hull Structures and Arrangements

2.1 Primary Hull Strength

2.1.1 Longitudinal Hull Girder Strength – Monohulls

The equations are, in general, valid for craft having breadths, B, not greater than twice their depths, D, as defined in 1.1 of this Part. Finite element analysis of the longitudinal hull girder strength is an acceptable alternate analysis to the requirements in 2.1.1 through 2.1.3 of this Chapter. The failure criteria, seaway loads, and finite element method is to be submitted for review, see 1.3 of this Part.

(a) Section Modulus

(i) All Craft

The required hull girder section modulus SM at amidships is to be not less than given by the following equation:

$SM = C_1C_2L^2B(C_b + 0.7)K_3CQ$ cm^2-m

where

C_1	=	$0.044L + 3.75$	$L < 90$ m
	=	$10.75 - \left(\frac{300 - L}{100}\right)^{1.5}$	$90 \text{ m} \leq L$
C_2	=	0.01	
L	=	length of craft, as defined in 1.1 of this Part	m
B	=	breadth, as defined in 1.1	m
V	=	maximum speed in calm water, in knots, for the loading condition under consideration	
C_b	=	block coefficient at the design draft, based on the length, L, measured on the design load waterline. C_b is not to be taken as less than 0.45 for L < 35 m or 0.6 for L ≥ 61 m. C_b for lengths between 35 m and 61 m is to be determined by interpolation.	
K_3	=	$0.70 + 0.30\left(\frac{\frac{V}{\sqrt{L}}}{2.36}\right)$	
		K_3 is not to be taken less than 1, nor more than 1.30.	
C	=	1.0 for steel craft	
		0.90 for aluminum craft	
		0.80 for fiber-reinforced plastic craft	

Q for steel:

= 1.0 for ordinary strength steel

= 0.78 for grade H32 steel

= 0.72 for grade H36 steel

For other steel grades:

Q_{other} = $490/(\sigma_y+0.66\sigma_u)$, where σ_y is not to be greater than 70% σ_u

Q for aluminum:

= $0.9 + q_5$ but not less than Q_o

q_5 = $115/\sigma_y$

Q_o = $635/(\sigma_y+\sigma_u)$

σ_y = minimum yield strength of unwelded aluminum (not to be greater than $0.7\sigma_u$) N/mm^2

σ_u = minimum ultimate strength of welded aluminum N/mm^2

Q for fiber reinforced plastic:

= $400/0.75\sigma_u$ N/mm^2

σ_u = minimum ultimate tensile or compressive strength, whichever is less, verified by approved test results. See 1.5 of Part II. Strength properties in the longitudinal direction of the craft are to be used. N/mm^2

(ii) Craft 61 m in Length and Over

In addition to meeting the above criteria in 2.1.1(a)(i), craft of 61 m in length or greater are to comply with the following requirements:

(1) Sign Convention of Bending Moment and Shear Force

The sign convention of bending moment and shear force is as shown in Fig. III 2-1 of this Chapter.

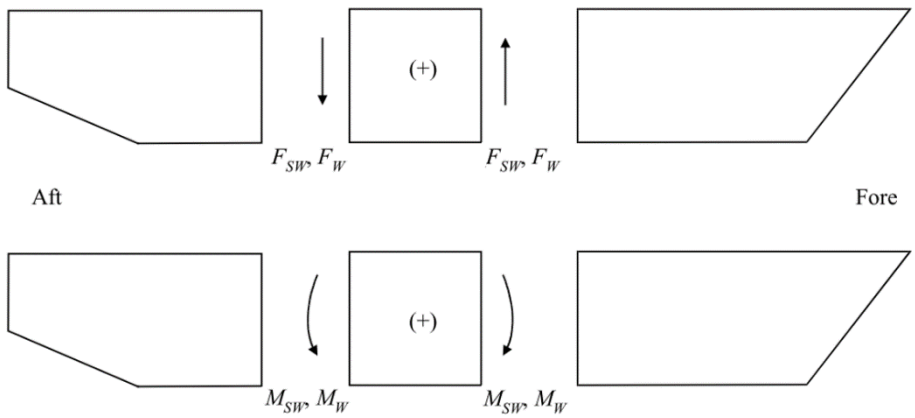

Fig. III 2-1
Sign Convention

(2) Wave Bending Moment Amidships

The wave bending moment, expressed in kN-m, may be obtained from the following equations:

M_{ws} = $-k_1C_1L^2B(C_b + 0.7) \times 10^{-3}$ Sagging Moment

M_{wh} = $+k_2C_1L^2BC_b \times 10^{-3}$ Hogging Moment

where

k_1 = 110

k_2 = 190

C_1, L, B and C_b are as defined in 2.1.1(a)(i) of this Chapter.

(3) Still Water Bending Moment

The maximum still water bending moment in both the hogging and sagging condition is to be submitted. In case the detailed information is not available in the early stages of design, or the still water bending moment is not required to be submitted, the still water bending moment in kN-m can be determined by the following:

M_{sws} = 0 Sagging Moment

M_{swh} = $0.375f_pC_1C_2L^2B(C_b + 0.7)$ Hogging Moment

where

f_p = 17.5 kN/cm^2

C_1, C_2, L, B and C_b are as defined in 2.1.1(a)(i) of this Chapter.

(4) Slamming Induced Bending Moment

The slamming induced bending moment in kN-m can be determined by the following equation:

M_{sl} = $C_3\Delta(1+n_{cg})(L-l_s)$ kN-m

where

C_3 = 1.25
Δ = full load displacement ton
l_s = length of slam load m
= A_R/B_{wl}
A_R = $0.697\Delta/d$ m^2
B_{wl} = waterline breadth at the LCG m
n_{cg} = maximum vertical acceleration as defined in 2.2.1(a) of this Chapter, but $(1+n_{cg})$ is not to be taken less than indicated in Table III 2-1 of this Chapter.

Table III 2-1
Minimum Vertical Acceleration

Δ (metric tons)	Minimum Vertical Acceleration, $(n_{cg}+1)$ (g)
180	3
400	2
≥ 1200	1

Note: Intermediate values of n_{cg} are to be determined by linear interpolation.

(5) Section Modulus

The required hull-girder section modulus for 0.4L amidships is to be obtained from the following equation:

$$SM = \frac{M_t CQ}{f_p} \quad \text{cm}^2\text{-m}$$

where:

M_t = maximum total bending moment kN-m
To be taken as the greatest of the following
= $M_{swh} + M_{wh}$
= $-M_{sws} - M_{ws}$
= M_{sl}
M_{swh} = maximum still-water bending moment in the hogging condition, as determined in 2.1.1(a)(ii)(3) of this Chapter kN-m
M_{sws} = maximum still water bending moment in the sagging condition, as determined in 2.1.1(a)(ii)(3) of this Chapter kN-m
M_{wh} = maximum wave induced bending moment in the hogging condition, as determined in 2.1.1(a)(ii)(2) of this Chapter kN-m
M_{ws} = maximum wave induced bending moment in the sagging condition, as determined in 2.1.1(a)(ii)(2) of this Chapter kN-m
M_{sl} = maximum slamming induced bending moment, as determined in 2.1.1(a)(ii)(4) of this Chapter kN-m
f_p = 17.5 kN-m

C and Q are as defined in 2.1.1(a)(i).

Consideration may be given to a seakeeping analysis based on craft speed and sea state to determine M_{ws} and M_{wh}.

(b) Extension of Midship Section Modulus

Where the still-water bending moment envelope is not submitted or where 2.1.1(a)(i) of this Chapter governs, the scantlings of all continuous and all effectively developed longitudinal material are to be maintained

throughout 0.4L amidships and may be gradually tapered beyond. The area of the strength deck and other effective decks comprising of plating and longitudinal members may be reduced linearly from 0.4L amidships to the ends. The ends of all continuous and effectively developed longitudinal members are to terminate with back-up brackets extending to and attached to an adjacent transverse member. The bracket is to extend for a distance not less than the depth of the member.

Structure that is not continuous throughout the midships 0.4L and beyond, but is effectively developed by brackets and welding to provide continuity of area, may be taken to contribute to the hull girder section modulus, provided the buckling strength required by 2.4.1(c) of this Chapter is maintained in way of the brackets.

Where the scantlings are based on the envelope curve of still-water bending moments, items included in the hull-girder section modulus amidships are to be extended as necessary to meet the hull-girder section modulus required at the location being considered, taking into account the distance required for the member to become fully effective (See 2.1.1(d)(ii) of this Chapter).

The envelope curve of M_{ws} and M_{wh} may be obtained by multiplying the midship value by the distribution factor M in Fig. III 2-2 of this Chapter.

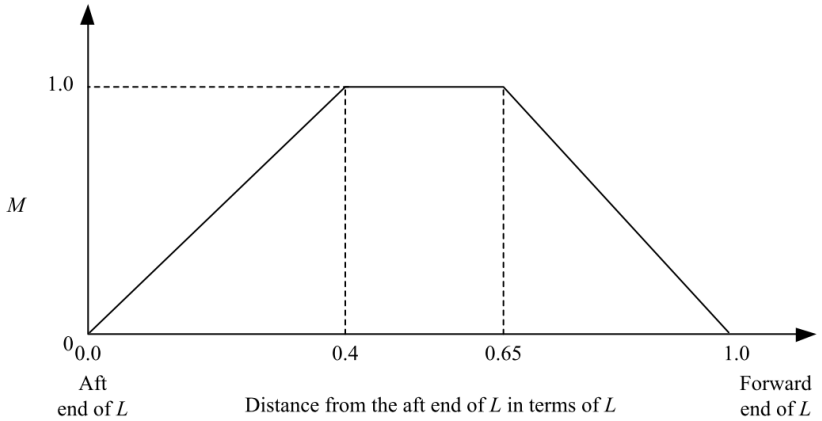

Fig. III 2-2
Distribution Factor M

(c) Moment of Inertia

The hull-girder moment of inertia, I, at amidships is to be not less than given by the following equation:

$$I = \frac{L}{QC}\frac{SM}{K} \qquad \text{cm}^2\text{-m}^2$$

where:

SM = required hull-girder section modulus in 2.1.1(a)(i) or 2.1.1(a)(ii) of this Chapter, whichever is greater cm²-m

K = factor dependent on the material and craft length as given in Table III 2-2 of this Chapter

L, C and Q are as defined in 2.1.1(a)(i) of this Chapter

Table III 2-2
Factor, *K*

L (m)	Steel	Aluminum	FRP(Basic Laminate)
Restricted Service L < 61 m	50	13.33	1.8
Unrestricted Service L ≤ 61 m	40	13.33	1.8
All Craft L > 61 m	33.3	11.1	1.5

Note:

(1) For fiber reinforced plastic laminates that are greater than the basic laminate (as defined in 1.7.4(a) of Part II), the value for K can be adjusted by the ratio of E_o/E_b

where:

E_o = the elastic modulus of the actual hull laminate N/mm^2

E_b = 6890 N/mm^2

(d) Section Modulus and Moment of Inertia Calculation

(i) Items Included in the Calculation

In general, the following items may be included in the calculation of the section modulus and moment of inertia provided they are continuous or effectively developed within midship 0.4L, have adequate buckling strength, and are gradually tapered beyond the midship 0.4L.

(1) Deck plating (strength deck and other effective decks)

(2) Shell and inner bottom plating

(3) Deck and bottom girders

(4) Plating and longitudinal stiffeners of longitudinal bulkheads

(5) All longitudinals of deck, sides, bottom, and inner bottom, see also 2.5.1(a)(i) of this Chapter

(ii) Effective Areas Included in the Calculation

In general, the net sectional areas of longitudinal strength members are to be used in the hull girder section modulus calculations, except that small isolated openings need not be deducted provided the openings and the shadow area breadths of other openings in any one transverse section do not reduce the section modulus by more than 3%. The breadth or depth of such openings is not to be greater than 25% of the breadth or depth of the member in which it is located with a maximum of 75 mm for scallops. The shadow area of an opening is the area forward and aft of the opening enclosed by the lines tangential to the corners of the opening intersecting each other to form an included angle of 30 degrees.

(iii) Section Modulus to the Deck or Bottom

The section modulus to the deck or bottom is obtained by dividing the moment of inertia by the distance from the neutral axis to the molded deck at side amidships or baseline, respectively. Where a long deckhouse or superstructure is considered as part of the hull girder, the section modulus to the deck is obtained by dividing the moment of inertia by the distance from the neutral axis to the top of the bulwark, deckhouse or superstructure.

(iv) Breaks

Craft having partial superstructures are to be specially strengthened in way of breaks to limit the local increase in stresses at these locations. The main deck plate and side shell plate thickness is to be increased a minimum of 25%, but the increase need not exceed 6.5 mm. This increase is to extend well beyond the break in both directions in such a fashion to provide a long gradual taper. Where breaks of the superstructure (e.g., long forecastle) are appreciably beyond the amidships 0.5L, these requirements may be modified. Gangways, large freeing ports and other openings in the shell or bulwarks are to be kept well clear of breaks, and any holes which must be unavoidably be cut in the plating are to be kept as small as possible and are to be circular or oval in form.

(e) Hull Girder Shear Strength Calculation – For Craft 61 m in Length and Over

(i) General

The nominal total shear stresses due to still-water and wave-induced loads are to be based on the maximum algebraic sum of the shear force in still-water, Fsw, the wave-indicated shear force, Fw, and the slam induced shear force, Fsl, at the location being considered. The thickness of the side shell is to be such that the nominal total shear stress as obtained by 2.1.1(e)(iii) of this Chapter are not greater than 11.0/Q kN/cm^2 where Q is as defined in 2.1.1(a)(i) of this Chapter. Consideration is also to be given to the shear buckling strength of the side shell plating.

(ii) Wave Shear Forces

The envelopes of maximum shearing forces induced by waves, Fw, as shown in Fig. III 2-3 and Fig. III 2-4 of this Chapter may be obtained from the following equations:

$F_{wp} = +kF_1C_1LB(C_b + 0.7) \times 10^{-2}$ For positive shear force

$F_{wn} = -kF_2C_1LB(C_b + 0.7) \times 10^{-2}$ For negative shear force

where:

F_{wp}, F_{wn}	=	positive and negative maximum shearing force induced by wave	kN
k	=	30	
F_1	=	distribution factor as shown in Fig. III 2-3 of this Chapter	
F_2	=	distribution factor as shown in Fig. III 2-4 of this Chapter	

C_1, L, B and C_b are as defined in 2.1.1(a)(i) of this Chapter.

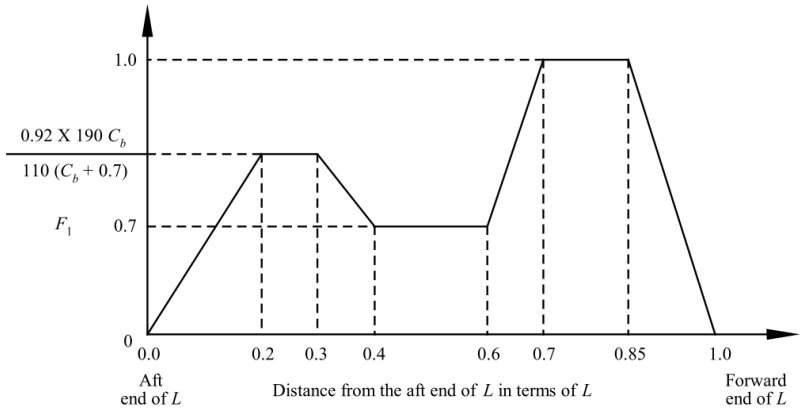

Fig. III 2-3
Distribution Factor F_1

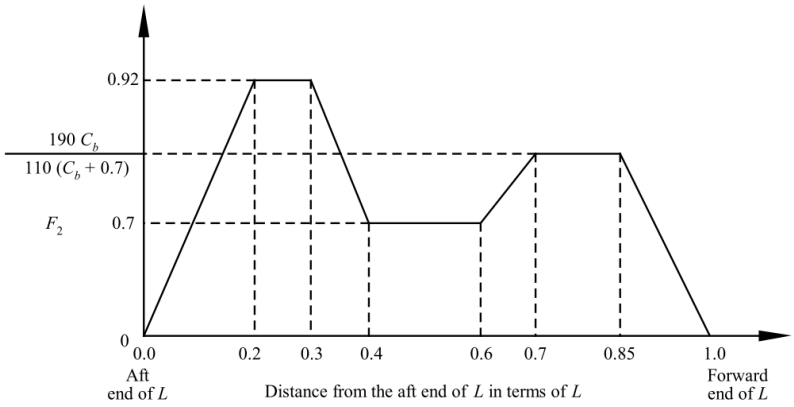

Fig. III 2-4
Distribution Factor F_2

(iii) Slam Induced Shear Force

The slamming induced shear force can be determined by the following equation:

$F_{sl} = C_4F_1\Delta(n_{cg} + 1)$ kN For positive shear force

$F_{sl} = C_4F_2\Delta(n_{cg} + 1)$ kN For negative shear force

where:

C_4 = 4.9

Δ	=	full load displacement	metric tons
n_{cg}	=	maximum vertical acceleration as defined in 2.2.1(a) of this Chapter	

(iv) Shear Strength

For craft without continuous longitudinal bulkheads, the nominal total shear stress f_s in the side shell plating may be obtained from the greater of the following equations:

$$f_s=(F_{sw} + F_w)m/(2t_sI)$$

$$f_s=F_{sl}\, m/(2t_sI)$$

where:

f_s	=	nominal total shear stress kN/cm^2	
I	=	moment of inertia of the hull girder section, at the section under consideration	cm^4
m	=	first moment about the neutral axis, of the area of the effective longitudinal material between the horizontal level at which the shear stress is being determined and the vertical extremity of effective longitudinal material, taken at the section under consideration cm^3	
t_s	=	thickness of the side shell plating, at the position under consideration	cm
F_{sw}	=	hull-girder shearing force in still-water kN	
F_w	=	F_{wp} or F_{wn} as specified by 2.1.1(e)(ii) of this Chapter, depending upon loading	kN
F_{sl}	=	slam induced shear force, as indicated in 2.1.1(e)(iii) of this Chapter. The slam induced shear force is to be applied in both the hogging and sagging conditions	kN

(v) Shearing Strength for Craft with Two or Three Longitudinal Bulkheads

For craft having continuous longitudinal bulkheads, the total shear stresses in the side shell and longitudinal bulkhead plating are to be calculated by an acceptable method. In determining the still-water shear force, consideration is to be given to the effect of non-uniform athwartship distribution of loads. The methods described in Part II, 3.3.2, of the Rules for Steel Ships may be used as a guide in calculating the nominal total shear stress fs related to the shear flow in the side shell or longitudinal bulkhead plating. Alternative methods of calculation will also be considered.

(vi) Hull Girder Shear Strength – FRP Craft

Hull girder shear strength will be specially considered on fiber reinforced plastic craft over 24 m in length.

(vii) Craft of Unusual Proportion

Craft having unusual proportions will be specially considered

(f) Hull Girder Torsional Loads

Torsional calculations may be required for craft with large deck openings. Racking load calculations may be required for craft with tall superstructures.

2.1.2 Primary Hull Strength – Twin-Hulled Craft

(a) Longitudinal Hull Girder Strength

The following applies to catamarans, surface effect craft, and similar configuration twin hulled craft.

The longitudinal strength requirements for twin-hulled craft are as given in 2.1.1(a) of this Chapter, with the following modifications:

(i) B is to be taken as the sum of the waterline breadths of each hull.

(ii) For craft less than 61 m, longitudinal shear strength need not be considered unless they have unusual or highly concentrated loads. For craft over 61 m the shear strength will be specially considered.

(iii) Items as listed in 2.1.1(d)(ii) of this Chapter may be included in the longitudinal strength calculation for the total cross section of the hulls, with the addition of the cross deck bridging structure. Consideration is to be given to the length over which the cross-deck structure becomes fully effective.

(b) Catamaran Transverse Loadings

The transverse primary hull loadings are determined by the following equations:

$M_{tb} = 2.5\Delta B_{cl}(1 + n_{cg})$ kN-m

$M_{tt} = 1.25\Delta L(1 + n_{cg})$ kN-m

$Q_t = 2.5\Delta(1 + n_{cg})$ kN-m

where:

M_{tb}	=	design transverse bending moment acting upon the cross structure connecting the hulls	kN-m
M_{tt}	=	design torsional moment acting upon the transverse structure connecting the hulls	kN-m
Q_t	=	design vertical shear force acting upon the transverse structure connecting the hulls	kN
Δ	=	craft displacement	ton
B_{cl}	=	distance between the hull centerlines	m
L	=	length of craft, as defined in 1.1.2 of this Part	m
n_{cg}	=	vertical acceleration at the craft's center of gravity, see 2.2.1(a) of this Chapter, but $(1 + n_{cg})$ is not to be taken less than indicated in Table III 2-1 of this Chapter	

(c) Transverse Strength for Catamarans and Surface Effect Craft

(i) Direct Analysis

The design loads that are to be applied to the structure are the transverse bending moment, M_{tb}, the torsional moment, M_{tt}, and vertical shear force, Q_t, as defined in 2.1.2(b) of this Chapter and the longitudinal bending moments as given in 2.1.1(a)(ii) of this Chapter. The requirements for the direct analysis are given in 1.3 of this Part.

(ii) Analysis for Simple Structures

Guidance for the analysis of cross deck structures that are symmetrical forward and aft of a transverse axis at amidships can be found in Appendix 2 of this Part.

(iii) Design Stresses and Deflections

Regardless of the method of analysis used, the design stresses are as follows:

σ_a	=	design transverse bending stress, $0.66\sigma_y$ for aluminum and steel craft and $0.33\sigma_u$ for FRP craft N/mm^2	
σ_{ab}	=	design torsional or combined stress, $0.75\sigma_y$ for aluminum and steel craft and $0.367\ \tau_u$ for FRP craft N/mm^2	
τ_a	=	design transverse shear stress, $0.38\sigma_y$ for aluminum and steel craft and $0.40\ \tau_u$ for FRP craft N/mm^2	
σ_y	=	minimum yield strength of the material. For aluminum the yield strength is to be for the unwelded condition and not to be greater than $0.7\sigma_{uw}$	N/mm^2
σ_u	=	minimum tensile or compressive strength, whichever is less	N/mm^2
σ_{uw}	=	ultimate tensile strength of material in the welded condition	N/mm^2
δ_m	=	maximum deflection for FRP craft, $(\sigma_a /E)L_I$	N/mm^2
τ_u	=	minimum ultimate through thickness shear strength	N/mm^2
L_I	=	mean span of cross structure, as indicated in Fig. III A2-2 of this Part	N/mm^2
E	=	tensile or compressive modulus of the FRP laminate, whichever is lesser	N/mm^2

(d) Items included in Transverse Moment of Inertia and Section Modulus Calculation

The following items may be included in the calculation of the transverse section modulus and moment of inertia provided that are continuous or effectively developed over the entire breadth of the cross structure or wet deck, and have adequate buckling strength:

(i) Deck plating, main deck and bottom plating of wet deck

(ii) Transverse stiffeners on wet deck

(iii) Transverse bulkheads or web frames which span the wet deck, and are effectively developed into the hulls

(iv) Transverse box beams, that are effectively developed into the hulls

(v) Continuous transom plating and attached horizontal stiffeners

In general, the effective sectional area of the deck for use in calculating the section modulus is to exclude hatchways and other large openings in the deck.

Superstructures and house tops are generally not to be included in the calculation of sectional properties of the cross structure. Craft having unusual configuration such as cross-deck structure out-of-line with the main hull structure will be specially considered.

(e) Craft with More Than Two Hulls

Transverse and torsional strength of craft with more than two hulls will be specially considered.

(f) Hull Girder Torsional Loads

Torsional calculations may be required for craft with large deck openings. Racking load calculations may be required for craft with high superstructures.

2.1.3 Strength Considerations for Hydrofoil Borne Craft

(a) Longitudinal Strength

The hull weight curve showing full load, lightship and partial load (if more severe) is to be submitted. The support reactions for each of the hydrofoils are to be shown. The resulting shear and bending moment diagrams, as derived from these curves, are to be submitted for approval.

Hull deflection under the condition of maximum bending moment is not to exceed 1/200 of the distance between the forward and aft foil attachment points.

(b) Calculation of Loads from Hydrofoil Appendages

The maximum forces transmitted by any hydrofoil to the craft structure is given by the following equations:

$$F_L = 13.847 C_L V^2 A_P$$

$$F_D = 13.847 V^2 (C_{DF} A_{FF} + C_{DS} A_{FS}) + \text{(Wetted surface drag)}$$

where:

F_L	=	maximum lift force on craft exerted by hydrofoil, This force is assumed to act perpendicular to the plane of the foil.	Kgf
F_D	=	maximum drag force on craft exerted by hydrofoil plus strut, This force is assumed to act directly aft from the center of the foil.	Kgf
C_L	=	peak coefficient of lift for the foil selected	
C_{DF}	=	peak coefficient of drag for the foil selected	
C_{DS}	=	peak coefficient of drag for the strut section selected	
V	=	maximum craft speed	knots
A_P	=	plan view area of foil	m^2
A_{FF}	=	frontal area of foil	m^2
A_{FS}	=	frontal area of strut	m^2

Total drag of the foil and strut (or similar appendage) is given by the drag term F_D that includes the frictional drag coefficient, as a function of wetted surface and Reynolds number.

The strength of the foils and struts are to be based on F_L and F_D and the resulting bending moments, shear forces, and vertical forces. The strength of the connections of the struts to the hull is to be based on the bending moments, shear forces, and vertical forces applied through the struts. A factor of safety on the yield strength of the material (aluminum use the as-welded condition) is to be not less than 2.0. Calculations of the bending moment, shear forces, and stiffness, are to be carried out and submitted by the designer.

Additionally, calculations supporting the "Fail-Safe" performance of each foil attachment structure are to be submitted.

Watertight integrity of the shell is to be maintained in the event of a collision of the hydrofoil appendages with a solid object in the water. A design safety factor of 2.0 on the yield strength or 3.0 on the ultimate strength of the foil strut bearing is to be used to assess the strength of the foil for the collision condition.

2.1.4 Effective Decks

To be considered effective for use in calculating the hull girder section modulus, the thickness of the deck plating is to comply with the requirements of 2.3 of this Chapter. The deck section areas are to be maintained throughout the midship 0.4L and may be gradually reduced to one half their midship value at 0.15L from the ends. Only that portion of deck which is continuous through the transverse structure may be considered effective.

2.1.5 Operating Manual

Craft are to be furnished with an CR approved operating manual providing guidance on:

(a) Means of identifying that the Manual is for the subject craft including principle particulars of the vessel.

(b) Loading conditions on which the design of the craft has been based, including cargo loading on decks, loading ramps, and double bottoms.

(c) There should also be evidence of approved loading and stability conditions on board the craft. These should preferably be included in the operating manual. If they are a separate document, they should be referenced in the operating Manual.

(d) Maximum approved speed and associated displacement.

(e) Service Limitations, any scope of operations and/or operational limits as applicable such as distance from port of refugee.

(f) Maximum operational speeds for the various sea-states (significant wave heights) in which the craft is intended to operate, exceeding the design significant wave height defined in Table III 2-3 of this Chapter.

(g) Permissible limits of still-water bending moments and shear forces, for craft 61m in length of greater.

(h) Position and application of watertight and weathertight (doors, hatches etc.) closing appliances necessary to meet the Load Line assignment; identification of doors and hatches to be kept closed at sea; information on storm shutters and their use; location of emergency escapes.

(i) From the aspect of the Flag Administration, depending on the Administration to which the craft is flagged, there will also be a need for other items to be included such as safety plan, fire fighting procedures, means of escape, evacuation procedures, operation of life saving appliances, and requirements for safe operation of the vessel.

2.2 Design Pressures

2.2.1 Monohulls

The bottom and side pressures are to be checked using the displacement (Δ), speed (V), draft (d), and running trim (τ) in the full load, half load, and light load conditions. If the craft is receiving a freeboard assignment, the parameters used in the full load condition are to coincide with the assigned freeboard. If the craft is not receiving a freeboard assignment, the parameters used in the full load condition are to correspond to the condition of the craft with the maximum operating

deadweight. The parameters used in the half load condition are to correspond to the condition of the craft with 50% of the maximum operating deadweight, and the parameters used in the light load condition are to correspond to the condition of the craft with 10% of the maximum operating deadweight plus the maximum speed of the craft.

(a) Bottom Design Pressure

The bottom design pressure is to be the greater of those, as given in the following equations, for the location under consideration. Bottom structure design pressures are dependent upon the service in which the craft operates. The bottom design pressure applies to hull bottoms below the chines or the upper turn of the bilge.

(i) Bottom Slamming Pressure

$$P_{bcg} = \frac{N_1 \Delta}{L_w B_w}\left[1 + n_{cg}\right] F_D \qquad \text{kN/m}^2$$

$$P_{bxx} = \frac{N_1 \Delta}{L_w B_w}\left[1 + n_{xx}\right]\left[\frac{70 - \beta_{bx}}{70 - \beta_{cg}}\right] F_D \qquad \text{kN/m}^2$$

(ii) Bottom Slamming Pressure for Craft Less Than 61 meters, The design pressure may be:

$$P_{bxx} = \frac{N_1 \Delta}{L_w B_w}\left[1 + n_{cg}\right] F_D F_V \qquad \text{kN/m}^2$$

(iii) Hydrostatic Pressure

$$P_d = N_3(0.64\text{H} + \text{d}) \qquad \text{kN/m}^2$$

where:

P_{bcg}	=	bottom design pressure at LCG	kN/m^2
P_{bxx}	=	bottom design pressure at any section clear of LCG	kN/m^2
P_d	=	bottom design pressure based on hydrostatic forces	kN/m^2
n_{cg}	=	the vertical acceleration of the craft as determined by a model test, theoretical computation, or service experience (see 1.3 of this Part). If this information is not readily available during the early stages of design, the following formula utilizing the average 1/100 highest vertical accelerations at LCG can be used: $n_{cg} = N_2\left[\frac{12h_{\frac{1}{3}}}{B_w} + 1.0\right]\tau\left[50 - \beta_{cg}\right]\frac{V^2(B_w)^2}{\Delta}$	g's
		note that g's are the dimensionless ratio of the acceleration at sea level (9.8m/s^2) The vertical acceleration, n_{cg}, is typically not to be taken greater than the following: $n_{cg} = 1.39 + 0.256\frac{V}{\sqrt{L}}$	g's
		for speeds greater than $18\sqrt{L}$, the maximum n_{cg} is 6.0 g (7.0 g for search and rescue type craft) The vertical accelerations are typically not to be taken less than 1.0 g for craft lengths less than 24 m and 2.0 g for craft lengths less than 12 m. Intermediate values can be determined by interpolation. The vertical acceleration will need to be specially considered for craft fitted with seat belts or special shock mitigation seats	
n_{xx}	=	average of the 1/100 highest vertical accelerations, at any section clear of LCG can be determined by the following equation:	
	=	$n_{cg}K_v$	g's
N_1	=	0.1	
N_2	=	0.0078	
N_3	=	9.8	
Δ	=	displacement at design waterline	kg
L_w	=	craft length on the waterline with the craft at the design displacement and in the displacement mode	m
B_w	=	maximum waterline beam	m

H	=	wave parameter, 0.0172L + 3.653, generally not to be taken less than the maximum survival wave height for the craft	m
$h_{1/3}$	=	significant wave height, see Table III 2-3 of this Chapter	m
τ	=	running trim at V, in degrees, but generally not to be taken less than 4° for craft L < 50 m, nor less than 3° for L > 50 m. Special consideration will be given to, designers' values predicted from model tests.	°
β_{cg}	=	deadrise at LCG, in degrees, generally not to be taken less than 10° nor more than 30°	°
β_{bx}	=	deadrise at any section clear of LCG, in degrees, not to be taken less than 10° nor greater than 30°, see Fig. III 2-5 of this Chapter	°
V	=	craft design speed in knots, see Table III 2-3 of this Chapter	knot
F_D	=	design area factor given in Fig. III 2-7 of this Chapter for given values of A_D and A_R Generally not to be taken less than 0.4. See Table III 2-4 of this Chapter for minimum values of F_D for craft less than 24 m in length	
F_V	=	vertical acceleration distribution factor given in Fig. III 2-9 of this Chapter	
K_V	=	vertical acceleration distribution factor given in Fig. III 2-8 of this Chapter	
A_D	=	design area. For plating it is the actual area of the shell plate panel but not to be taken as more than $2.5s^2$. For longitudinals, stiffeners, transverses and girders it is the shell area supported by the longitudinal stiffener, transverse or girder; for transverses and girders the area used need not be taken less than $0.33l^2$.	cm^2
A_R	=	reference area, $6.95\Delta/d$	cm^2
s	=	spacing of longitudinals or stiffeners	cm
l	=	unsupported span of internals, see 2.4.1.(b)(i) of this Chapter	cm
d	=	stationary draft. Vertical measured from baseline to design waterline at middle of design waterline length, but generally not to be taken as less than 0.04L.	m

Table III 2-3
Design Significant Wave Heights, $h_{1/3}$, and Speeds, V

	Operational Condition	
	$h_{1/3}$	V
High-Speed Craft	4m (1)	V_m (2)
Coastal Craft	2.5m	V_m (2)
Riverine Craft	0.5m	V_m (2)

Notes:

(1) The design significant wave height for unrestricted service craft is greater than or equal to 4.0 m, generally not to be taken as less than L/12.

(2) V_m = maximum speed for the craft in the design condition specified in 2.2.1 of this Chapter.

Table III 2-4
Minimum Values for F_D (L ≤ 24m)

s mm	F_D
250	0.85
500	0.75
750	0.60
1000	0.50
1250	0.40

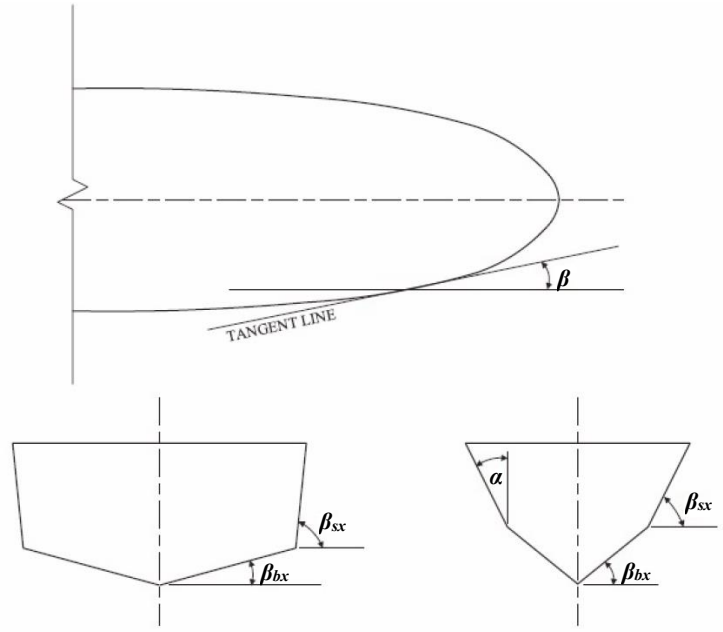

Fig. III 2-5
Deadrise, Flare, and Entry Angles

(b) Side and Transom Structure, Design Pressure

The side design pressure, kN/m^2, is to be not less than given by the equations:

(i) Slamming Pressure

$$P_{sxx} = \frac{N_1 \Delta}{L_w B_w}[1 + n_{xx}]\left[\frac{70 - \beta_{sx}}{70 - \beta_{cg}}\right] F_D \qquad \text{kN/m}^2$$

(ii) Hydrostatic Pressure

$$P_s = N_3(H_s - y) \qquad \text{kN/m}^2$$

(iii) Fore End

$$P_{sf} = 0.28 F_a C_F N_3 (0.22 + 0.15\tan\alpha)\left(0.4V\sin\beta + 0.6\sqrt{L}\right)^2 \qquad \text{kN/m}^2$$

Where L is generally not to be taken less than 30 m

where:

P_{sxx} = side design slamming pressure at any section clear of LCG. For craft greater than 24 m in length, the side design slamming pressure applies both along the entire length below L/12 above baseline and to the region forward of 0.125L kN/m^2

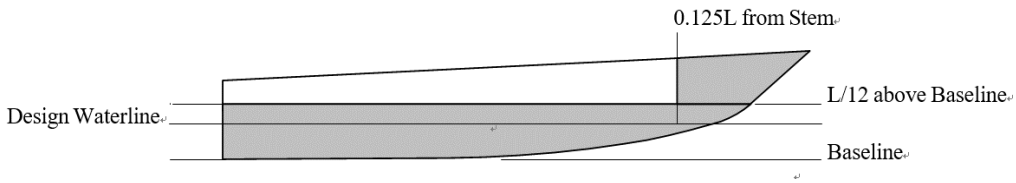

P_s = side design pressure due to hydrostatic forces, but is not to be taken less than the following: kN/m^2

= $0.05N_3L$, at or below L/15 above the base line or any height above base line forward of 0.125L from the stem kN/m^2

= $0.033N_3L$, above L/15 above the base line, aft of 0.125L from the stem kN/m^2

P_{sf}	=	side design pressure for forward of 0.125L from the stem	kN/m^2
H_s	=	0.083L + d, but it is not to be taken less than D + 1.22 (D + 4) for craft less than 30 m	m
	=	0.64H + d for craft over 30 m	m
y	=	distance above base line of location being considered	m
L	=	craft length as defined in 1.1.2 of this Part	m
β_{sx}	=	deadrise of side at any section clear of LCG, not to be taken greater than 55°, see Fig. III 2-5 of this Chapter	°
C_F	=	0.0125L for L < 80 m	
	=	1.0 for L ≥ 80 m	
F_a	=	3.25 for plating and 1.0 for longitudinals, transverses and girders	
α	=	flare angle, the angle between a vertical line and the tangent to the side shell plating, measured in a vertical plane at 90° to the vertical tangent to the side shell, see Fig. III 2-5 of this Chapter	°
β	=	entry angle, the angle between a longitudinal line, parallel to the centerline and the horizontal tangent to the side shell, see Fig. III 2-5 of this Chapter	°

N_1, N_3, Δ, L_w, B_w, V, n_{xx}, β_{cg}, H, d and F_D are as defined in 2.2.1(a) of this Chapter.

2.2.2 Multi-Hull and Surface Effect Craft

The bottom and side pressures are to be checked using the displacement (Δ), speed (V), draft (d) and running trim (τ) in the full load, half load and lightship conditions. If the craft is receiving a freeboard assignment, the parameters used in the full load condition are to coincide with the approved freeboard assignment. If the craft is not receiving a freeboard assignment, the parameters used in the full load condition are to correspond to the maximum operating deadweight. The parameters used in the half load condition are to correspond to 50% of the maximum operating deadweight, and the parameters used in the lightship condition are to correspond to 10% of the maximum operating deadweight plus the maximum speed of the craft. The on-cushion speed is to be used for surface effect craft.

(a) Bottom Design Pressure

The bottom design pressure is to be the greater of the following equations, for the location under consideration. Bottom design pressures are dependent upon the service in which the craft operates. The bottom design pressure applies to hull bottoms below the chines or the upper turn of the bilge for catamarans, trimarans or other multihulled craft and surface effect craft. Bottoms of twin hull surface effect craft shall be considered as catamaran hulls for the purpose of calculation of the bottom slamming pressure.

(i) Bottom Slamming Pressure

$$P_{bcg} = \frac{N_1 \Delta}{L_w N_h B_w}\left[1 + n_{cg}\right] F_D \qquad \text{kN/m}^2$$

$$P_{bxx} = \frac{N_1 \Delta}{L_w N_h B_w}\left[1 + n_{xx}\right]\left[\frac{70 - \beta_{bx}}{70 - \beta_{cg}}\right] F_D \qquad \text{kN/m}^2$$

(ii) Bottom Slamming Pressure for Craft Less Than 61 meters

The design pressure may be:

$$P_{bxx} = \frac{N_1 \Delta}{L_w N_h B_w}\left[1 + n_{cg}\right] F_D F_V \qquad \text{kN/m}^2$$

(iii) Hydrostatic Pressure

$$P_d = N_3(0.64\text{H} + \text{d}) \qquad \text{kN/m}^2$$

where:

n_{cg} = the vertical acceleration of the craft as determined by a model test, theoretical computation, or service experience (see 1.3 of this Part). If this information is not readily available during the early stages of design, the following formula utilizing the average 1/100 highest vertical accelerations at LCG can be used:

$$n_{cg} = N_2\left[\frac{12h_{\frac{1}{3}}}{N_h B_w} + 1.0\right]\tau\left[50 - \beta_{cg}\right]\frac{V^2(N_h B_w)^2}{\Delta} \qquad \text{g's}$$

The maximum and minimum vertical accelerations defined in 2.2.1(a) of this Chapter are applicable to multihull craft.

β_w = maximum waterline beam of one hull m

N_h = number of hulls

p_{bcg}, p_{bxx}, N_1, N_2, N_3, Δ, L_w, V, F_V, n_{xx}, β_{bx}, β_{cg}, H, d and F_D are as defined in 2.2.1(a) of this Chapter.

(b) Side and Transom Structure, Design Pressure

The side design pressure, kN/m^2, is to be not less than given by the equations:

(i) Slamming Pressure

$$P_{sxx} = \frac{N_1\Delta}{L_w N_h B_w}[1 + n_{xx}]\left[\frac{70 - \beta_{xx}}{70 - \beta_{cg}}\right]F_D \qquad \text{kN/m}^2$$

(ii) Hydrostatic Pressure

$$P_x = N_3(H_s - \text{y}) \qquad \text{kN/m}^2$$

(iii) Fore End

$$P_{sf} = 0.28F_a C_F N_3(0.22 + 0.15\tan\alpha)\left(0.4\text{V}\sin\beta + 0.6\sqrt{L}\right)^2 \qquad \text{kN/m}^2$$

Where L is generally not to be taken less than 30 m

where:

P_{sxx} = side design slamming pressure at any section clear of LCG. For craft greater than 24 m in length, the side design slamming pressure applies both along the entire length below L/12 above baseline and to the region forward of 0.125L kN/m^2

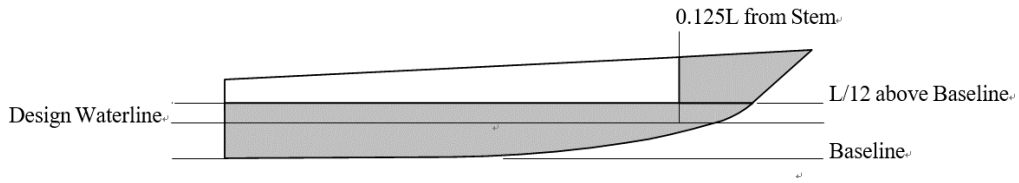

P_s = side design pressure due to hydrostatic forces, but is not to be taken less than the following: kN/m^2

= $0.05N_3L$ at or below L/15 above the base line or any height above base line forward of 0.125L from the stem kN/m^2

= $0.033N_3L$ above L/15 above the base line, aft of 0.125L from the stem kN/m^2

P_{sf} = side design pressure for forward of 0.125L from the stem kN/m^2

y = distance above base line, of location being considered m

L = craft length, as defined in 1.1.2 of this Part m

F_a = 3.25 for plating and 1.0 for longitudinals, transverses and girders

C_F = 0.0125L for L < 80 m

= 1.0 for L ≥ 80 m

α = flare angle, the angle between a vertical line and the tangent to the side shell plating, measured in a vertical plane at 90° to the horizontal tangent to the side shell, see Fig. III 2-5 of this Chapter. °

β = entry angle, the angle between a longitudinal line, parallel to the centerline and the vertical tangent to the side shell, see Fig. III 2-5 of this Chapter. °

N_1, N_3, Δ, L_w, V, n_{xx}, β_{cg}, H_s, d and F_D are as defined in 2.2.1(a) of this Chapter, β_{sx}, is as defined in 2.2.1(b) of this Chapter. N_h and B_w are as defined in 2.2.2(a) of this Chapter.

(c) Wet Deck or Cross Structure

The wet deck design pressure is to be determined by the following equations:

$$P_{wd} = 30N_1F_DF_IVV_I\left(1 - \frac{0.85h_a}{h_{\frac{1}{3}}}\right) \qquad \text{kN/m}^2$$

where:

N_I = 0.10

h_a = vertical distance, from lightest draft waterline to underside of wet deck, at design point in question. h_a is not to be greater than $1.176h_{1/3}$ m

F_I = wet deck pressure distribution factor as given in Fig. III 2-10 of this Chapter

V_I = relative impact velocity as given below:

$$= \frac{4h_{\frac{1}{3}}}{\sqrt{L}} + 1 \qquad \text{m/s}$$

V, $h_{1/3}$ and F_D are as defined in 2.2.1(a) of this Chapter.

2.2.3 Deck Design Pressures – All Craft

The design pressures, P_d, are to be as given in Table III 2-5 of this Chapter, see Fig. III 2-6 of this Chapter.

2.2.4 Superstructures and Deckhouses – All Craft

The design pressures, P, are to be as given in Table III 2-6 of this Chapter

2.2.5 Bulkhead Structure, Design Pressure – All Craft

(a) Tank Boundaries

The design pressure for tank boundaries, for both integral and non-integral tanks is to be not less than the following equations, whichever is greater:

$$P_t = N_3h \qquad \text{kN/m}^2$$

$$P_t = \rho g(1 + 0.5n_{xx})h_2 \qquad \text{kN/m}^2$$

where:

N_3 = as defined in 2.2.1(a) of this Chapter

h = greatest of the following distances, from lower edge of plate panel or center of area supported by stiffener, to: m

(i) A point located above the top of the tank, at a distance of two-thirds the height from the top of the tank to the top of the overflow.

(ii) A point located at two-thirds of the distance to the main weather deck.

(iii) A point located above the top of the tank, not less than the greater of the following:

(1) 0.01L + 0.15 m

(2) 0.46 m

where L is the craft length as defined in 1.1.2 of this Part

ρ_g = specific weight of the liquid, not to be taken less than 10.05 kN/m^3

n_{xx} = vertical acceleration at midspan of the tank, as defined in 2.2.1(a) of this Chapter g's

h_2	=	distance from lower edge of plate panel or center of area supported by stiffener to the top of the tank	m

The heights of overflows are to be clearly indicated on the plans submitted for approval.

Pressurized tanks will be subject to special consideration.

(b) Watertight Boundaries

The design pressure for watertight boundaries is to be not less than the value given by the following equation:

$$P_w = N_3 h \qquad \text{kN/m}^2$$

where:

N_3	=	as defined in 2.2.1(a) of this Chapter	
h	=	distance from the lower edge of plate panel or the center of area supported by the stiffener to the bulkhead deck at centerline	m

2.2.6 Operational Loads

Loads on the hull structure are dependent on the craft's mission, payload and operational environment. For classification purposes, the following payloads must be accounted for in addition to the other loads and pressures defined in this Section:

- Vehicle and human loads (see 2.3.1(e) and 2.4.1(h) of this Chapter)
- Take-off, landing, and stowage of helicopters

(a) Human Loads

Composite deck structures are to withstand a point load equivalent to the weight of a man (90.7 kg) in the middle of the plate or the midspan stiffener.

(b) Helicopter Decks

(i) General

Helicopter decks, where provided, are to meet the following structural and safety requirements.

Plans showing the arrangement, scantlings and details of the helicopter deck are to be submitted. The arrangement plan is to show the overall size of the helicopter deck and the designated landing area. If the arrangement provides for the securing of a helicopter or helicopters to the deck, the predetermined position(s) selected to accommodate the secured helicopter, in addition to the locations of deck fittings, for securing the helicopter are to be shown. The type of helicopter to be considered is to be specified and calculations for appropriate loading conditions are to be submitted.

(ii) Overall Distributed Loading

For a platform type helicopter decks, a minimum distributed loading of 2010 N/m^2 is to be taken over the entire helicopter deck. For all other helicopter decks, the minimum overall distributed load is to be as specified in Table III 2-5 of this Chapter.

(iii) Helicopter Landing and Impact Loading

A load of not less than 75% of the helicopter maximum take-off weight is to be taken on each of two square areas, 0.3 m × 0.3 m. Alternatively, the manufacturer's recommended wheel impact loading will be considered. The deck is to be considered for helicopter landings at any location within the designated landing area. The structural weight of the helicopter deck is to be added to the helicopter impact loading when considering girders, stanchions, truss supports, etc. Where the upper deck of a superstructure or deckhouse is used as a helicopter deck and the spaces below are normally manned (quarters, bridge, control room, etc.) the impact loading is to be multiplied by a factor of 1.15.

(iv) Stowed Helicopter Loading

If provisions are made to accommodate helicopter secured to the deck in a predetermined position, the structure is to be considered for a local loading not to be taken less than:

$P_{HC} = W_{to}(1 + 0.5n_{xx}) + 0.49$ kN/m^2

where

W_{to}	=	maximum take-off weight	kN/m^2
n_{xx}	=	as defined in 2.2.1(a) of this Chapter	g's

(v) Special Landing Gear

Helicopters fitted with landing gear other than wheels will be specially considered.

(vi) Loading due to Motions of Craft

The structure supporting helicopter decks is to withstand the loads resulting from the motions of the craft.

(vii) Environmental Loading

Calculations are to consider anticipated wind and wave impact loadings on helicopter decks and their supporting structures.

Table III 2-5
Deck Design Pressure, P_d

Location	kN/m^2
Exposed freeboard deck, and superstructure and deckhouse decks forward of 0.25L.	0.20L+7.6
Freeboard deck inside enclosed superstructures and deckhouses, exposed superstructure and deckhouse decks aft of 0.25L, and internal decks included in the hull girder bending moment	0.10L+6.1
Enclosed accommodations decks	5.0
Concentrated deck cargo loads, equipment foundations	$W(1+0.5n_{xx})$
Enclosed store rooms, machinery spaces, etc. decks	$\rho h(1+0.5n_{xx})$

Notes:

W	=	deck cargo load	kN/m^2
n_{xx}	=	average vertical acceleration at the location under consideration as defined in 2.2.1(a) of this Chapter	g's
ρ	=	cargo density, not to be taken less than 7.04	kN/m^3
h	=	height of enclosed store room, machinery space, etc.	m
L	=	craft length as defined in 1.1.2 of this Part	m

- Where permanently attached equipment are fitted and the live load associated with this equipment is greater than the deck design pressure, the equipment live loads govern.

Table III 2-6
Superstructures and Deckhouses Design Pressures

Location	L ≤ 12.2 m kN/m^2	L > 30.5 m kN/m^2
Superstructure and Deckhouse Front Plating	24.1	37.9
Superstructure and Deckhouse Front Stiffeners	24.1	24.1
Superstructure and Deckhouse Aft End and House Side Plating	10.3	13.8
Superstructure and Deckhouse Aft End and House Side Stiffeners	10.3	10.3
House Tops, Forward of Midships, Plating and Stiffeners	6.9	8.6
House Tops, Aft of Midships, Plating and Stiffeners	3.4	6.9

Note:

For craft between 12.2 and 30.5 m, design pressure is to be obtained by interpolation.

L = craft length as defined in 1.1.2 of this Part.

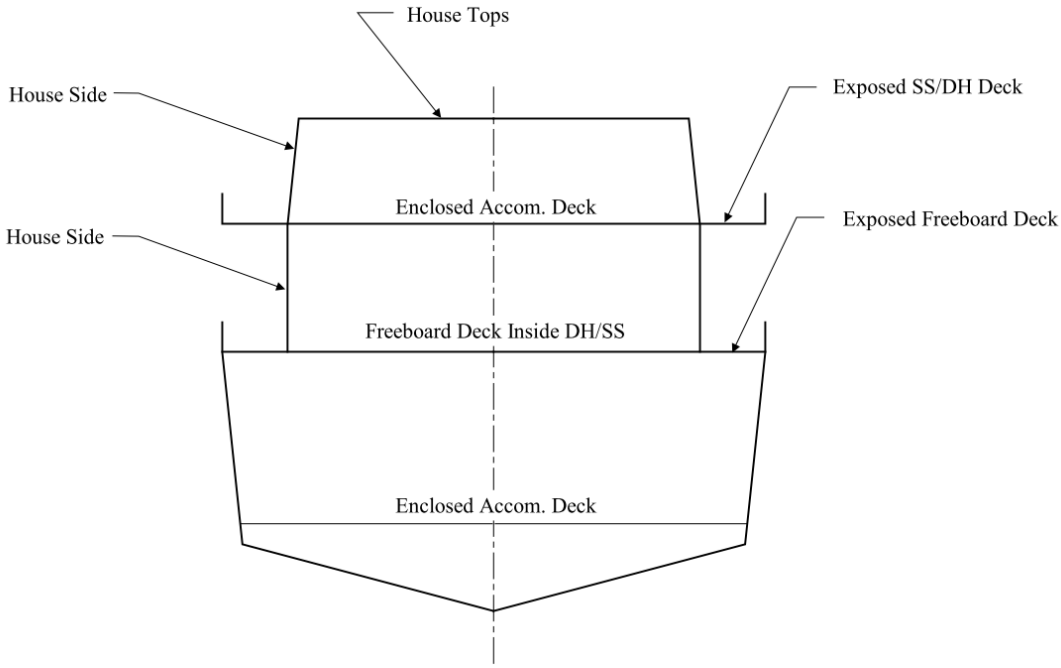

Fig. III 2-6
Decks, Superstructures, and Deckhouse Pressures

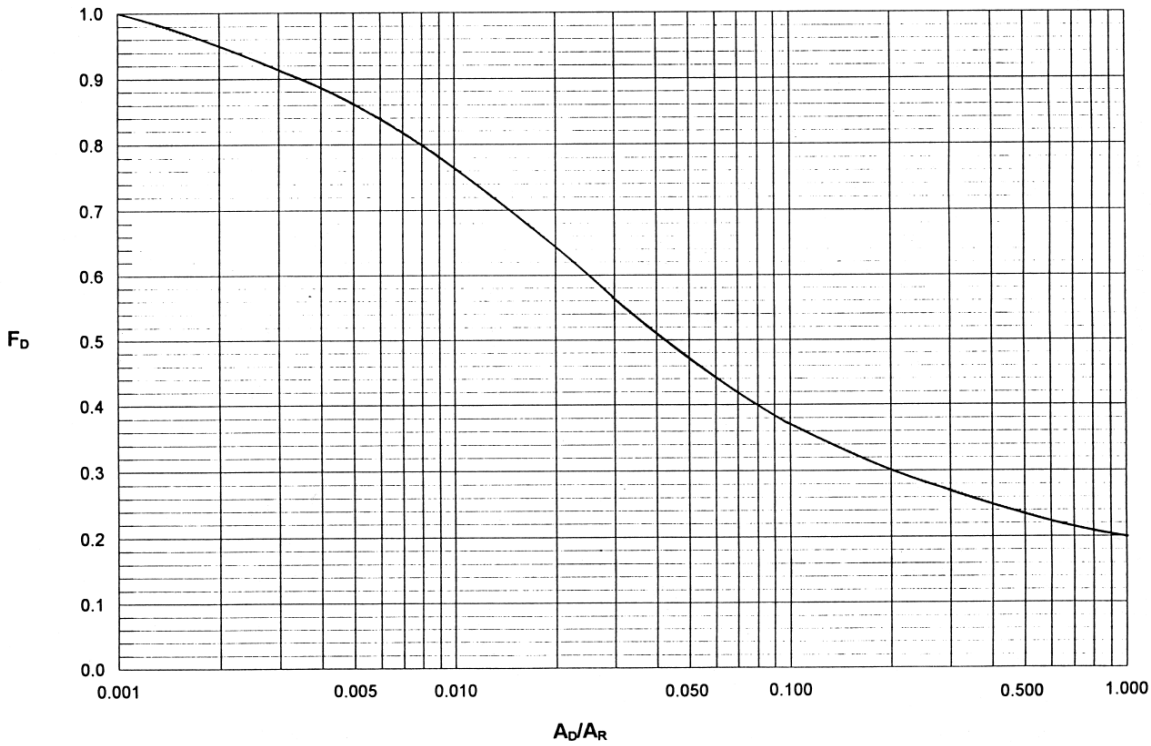

Fig. III 2-7
Design Area Factor F_D

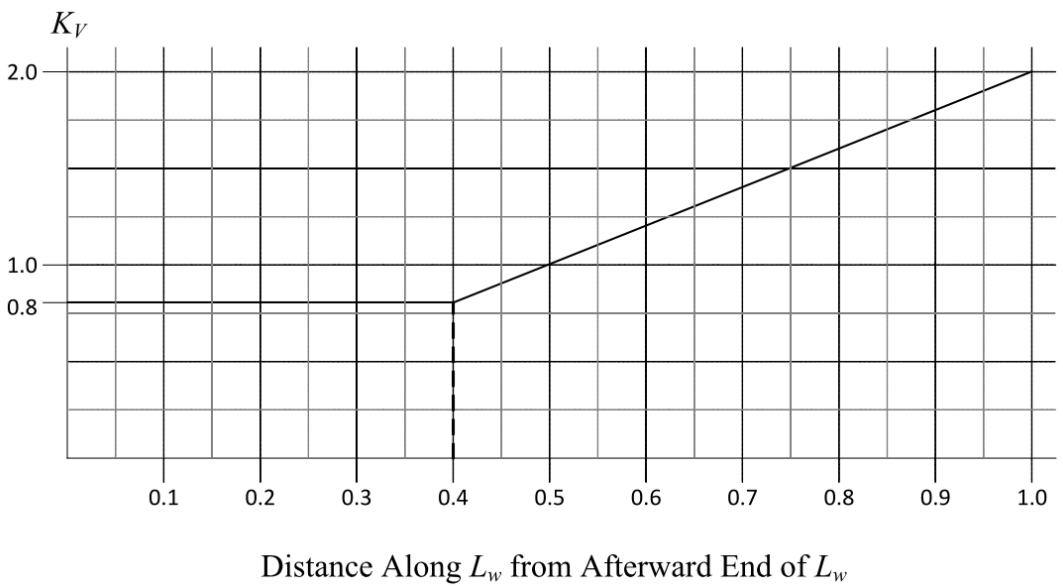

Fig. III 2-8
Vertical Acceleration Distribution Factor K_V

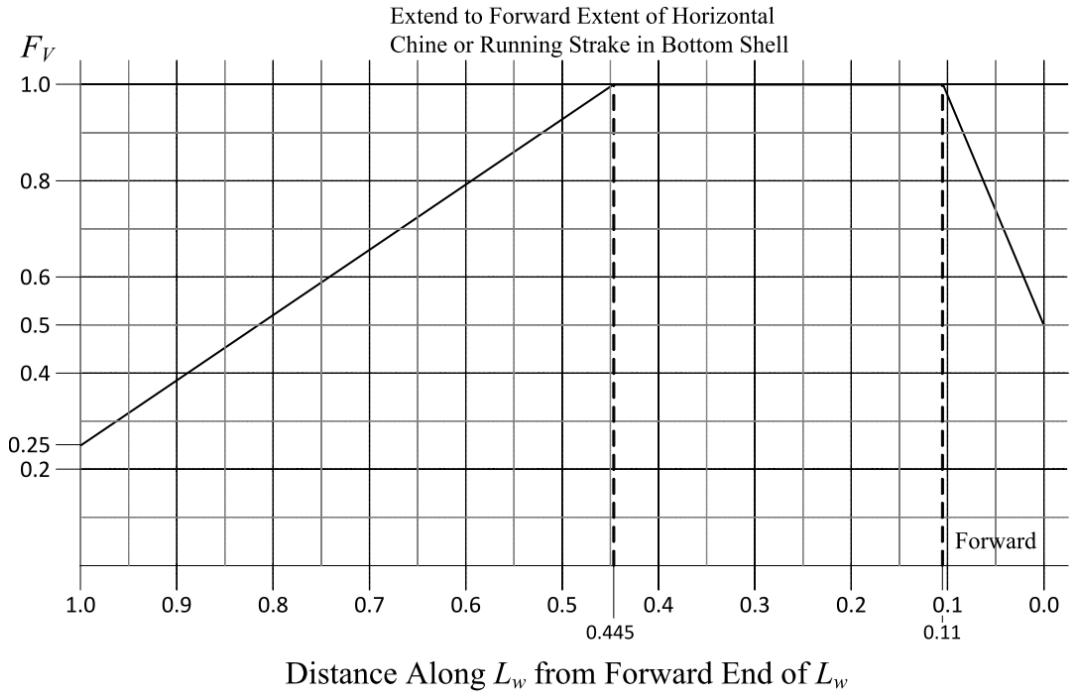

Fig. III 2-9
Vertical Acceleration Distribution Factor F_V

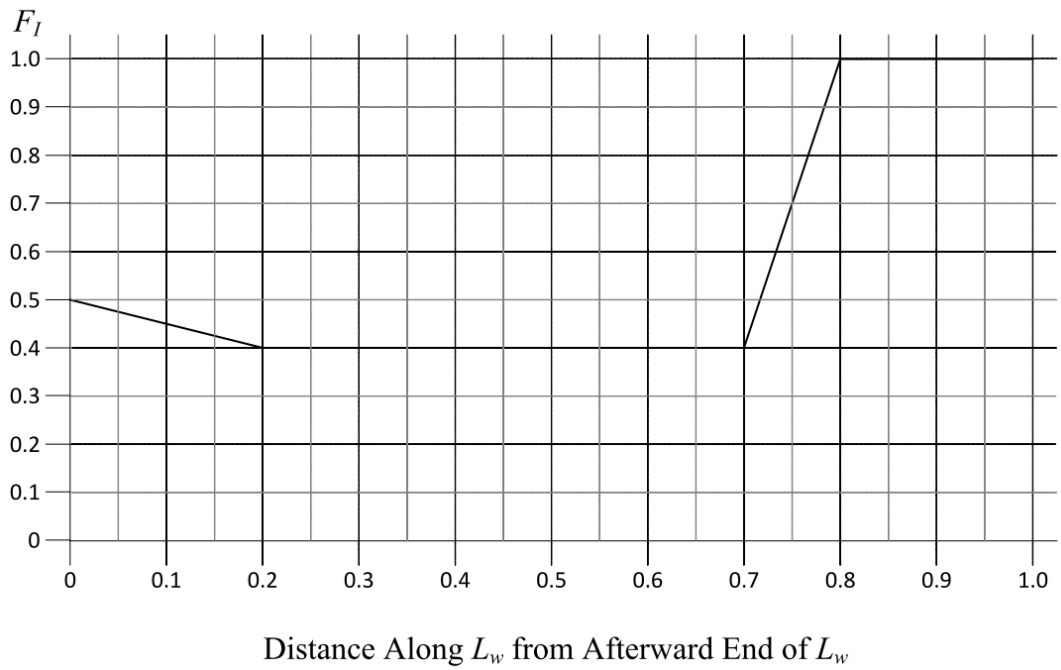

Fig. III 2-10
Wet Deck Pressure Distribution Factor F_I

2.3 Plating

2.3.1 Aluminum or Steel

(a) General

The bottom shell is to extend from the keel to the chine or upper turn of bilge. In general the side shell is to be of the same thickness from its lower limit to the gunwale.

All plating is to meet the requirements for thickness as given in 2.3.1(b) of this Chapter.

In addition those areas of plating associated with primary hull strength are to meet the buckling criteria as given in 2.3.1(c) of this Chapter. Where plate panels are subjected to other bending, biaxial, or a combination of stresses, they will be specially considered.

The thickness of the shell plating in way of skegs, shaft struts, hawse pipes, etc. is to be increased by 50% over that obtained from 2.3.1(b) of this Chapter.

The thickness of water jet tunnels and transverse thruster tubes is to be in accordance with 2.3.1(d) of this Chapter.

Where the plating forms decks for the access, operation or stowage of vehicles, the plating is in addition to meet the requirements of 2.3.1(e) of this Chapter.

(b) Thickness

The thickness of the shell, deck or bulkhead plating is to be not less than obtained by the following equations, whichever is greater:

(i) Lateral Loading

$$t = s\sqrt{\frac{pk}{1000\sigma_a}} \qquad \text{mm}$$

where:

s	=	spacing, of the shell, deck, superstructure, deckhouse or bulkhead longitudinals or stiffeners mm	
p	=	design pressure, given in 2.2 of this Chapter	kN/m^2
k	=	plate panel aspect ratio factor, given in Table III 2-7 of this Chapter	
σ_a	=	design stress, given in Table III 2-8 of this Chapter	N/mm^2

Table III 2-7
Aspect Ratio Coefficient for Isotropic Plates

l/s	k	k_1
>2.0	0.500	0.028
2.0	0.497	0.028
1.9	0.493	0.027
1.8	0.487	0.027
1.7	0.479	0.026
1.6	0.468	0.025
1.5	0.454	0.024
1.4	0.436	0.024
1.3	0.412	0.021
1.2	0.383	0.019
1.1	0.348	0.017
1.0	0.308	0.014

Notes:

s	=	shorter edge of plate panel	mm
l	=	longer edge of plate panel	mm

Intermediate values may be determined by linear interpolation.

Table III 2-8
Design Stress, σ_a, Aluminum and Steel

Location		Design Stress, σ_a(1)	
Bottom Shell		Slamming Pressure	$0.90\sigma_y$(2)
		Hydrostatic Pressure	$0.55\sigma_y$
Waterjet Tunnels		Slamming Pressure	$0.60\sigma_y$
		Hydrostatic Pressure	$0.55\sigma_y$
Side Shell	Below Bulkhead Deck	Slamming Pressure	$0.90\sigma_y$
		Hydrostatic Pressure	$0.55\sigma_y$
	Above Bulkhead Deck (i.e. foc'sles)	Slamming Pressure	$0.90\sigma_y$
		Hydrostatic Pressure	$0.55\sigma_y$
Deck Plating	Strength Deck	$0.60\sigma_y$	
	Lower Decks/ Other Decks	$0.60\sigma_y$	
	Wet Decks	$0.90\sigma_y$	
	Superstructure and Deckhouse Decks	$0.60\sigma_y$	
Bulkheads	Deep Tank	$0.60\sigma_y$	
	Watertight	$0.95\sigma_y$	
Superstructure aft of 0.25L from F.P. & Deckhouses	Front, Sides, Ends, Tops	$0.60\sigma_y$(3)	

Notes:

(1) yield strength of steel or of welded aluminum in N/mm^2, but not to be taken greater than 70% of the ultimate strength of steel or welded aluminum

(2) The design stress for bottom shell plates under slamming pressure may be taken as σ_y for plates outside the midship 0.4L.

(3) The design stress for steel deckhouse plates may be taken as $0.90\sigma_y$.

(ii) Thickness Based on Secondary Stiffening

$t_s = 0.01s$ mm

$t_{al} = 0.012s$ mm

where:

t_s = required thickness for steel craft

t_{al} = required thickness for aluminum craft

s is as defined in 2.3.1(b)(i) of this Chapter.

(iii) Minumum Thickness

The thickness of shell plating, decks and bulkheads is to be not less than obtained from the following equations:

(1) Bottom Shell

$$t_s = 0.44\sqrt{Lq_s} + 2.0 \quad \text{mm}$$

$$t_{al} = 0.70\sqrt{Lq_a} + 1.0 \quad \text{mm}$$

where:

L	=	craft length, as defined in 1.1.2 of this Part	m
q_s	=	1.0 for ordinary strength steel; $245/\sigma_{ys}$ for higher strength steels, but not to be taken less than 0.72	
σ_{ys}	=	yield strength for higher strength steel	N/mm^2
q_a	=	$115/\sigma_{ya}$ for aluminum alloys	
σ_{ya}	=	minimum unwelded yield strength for aluminum alloys, but not to be taken as more than 0.7 of the ultimate tensile strength in the as-welded condition	N/mm^2

t_s and t_{al} as defined in 2.3.1(b)(ii) of this Chapter. However, t_s is not to be taken less than 3.5 mm and t_{al} is not to be taken less than 4.0 mm.

(2) Side Shell

$$t_s = 0.40\sqrt{Lq_s} + 2.0 \quad \text{mm}$$

$$t_{al} = 0.62\sqrt{Lq_a} + 1.0 \quad \text{mm}$$

where t_s and t_{al} are as defined in 2.3.1(b)(ii) of this Chapter. However, t_s is not to be taken less than 3.0 mm and t_{al} is not to be taken less than 3.5 mm.
q_s, q_a and L are as defined in 2.3.1(b)(iii)(1) of this Chapter.

(3) Strength Deck

$$t_s = 0.40\sqrt{Lq_s} + 1.0 \quad \text{mm}$$

$$t_{al} = 0.62\sqrt{Lq_a} + 1.0 \quad \text{mm}$$

where t_s and t_{al} are as defined in 2.3.1(b)(ii) of this Chapter. However, t_s is not to be taken less than 3.0 mm and t_{al} is not to be taken less than 3.5 mm.
q_s, q_a, and L are as defined in 2.3.1(b)(iii)(1) of this Chapter.

(4) Lower Decks, W.T. Bulkheads, Deep Tank Bulkheads

$$t_s = 0.35\sqrt{Lq_s} + 1.0 \quad \text{mm}$$

$$t_{al} = 0.52\sqrt{Lq_a} + 1.0 \quad \text{mm}$$

where t_s, t_{al}, q_s, q_a and L are as defined in 2.3.1(b)(ii) of this Chapter. However, t_s is not to be taken less than 3.0 mm and t_{al} is not to be taken less than 3.5 mm.
Where the use is made of special purpose aluminum extrusions or special welding techniques are utilized the minimum plate thickness, as given in 2.3.1(b)(iii) of this Chapter, will be specially considered based on location, purpose and material grades.

(c) Buckling Criteria

(i) Uni-axial Compression

(1) Ideal Elastic Stress

$$\sigma_E = 0.9m_1E\left(\frac{t_b}{s}\right)^2 \quad \text{N/mm}^2$$

where:

m_1	=	buckling coefficient as given in Table III 2-9 of this Chapter		
E	=	for steel:	2.06×10^5	N/mm^2
	=	for aluminum:	6.9×10^4	N/mm^2
t_b	=	thickness of plating		mm
s	=	shorter side of plate panel		mm
l	=	longer side of plate panel		mm

(2) Critical Buckling Stress

The critical buckling stress in compression, σ_c, is determined as follows:

$$\sigma_c = \sigma_E \qquad \text{when } \sigma_E \leq 0.5\ \sigma_y$$

$$\sigma_c = \sigma_y\left(1 - \frac{\sigma_y}{4\sigma_E}\right) \qquad \text{when } \sigma_E > 0.5\ \sigma_y$$

where:

σ_y	=	yield stress of material Note: Generally the unwelded yield strength may be used, but due account is to be made for critical or extensive weld zones.	N/mm^2
σ_E	=	ideal elastic buckling stress calculated in 2.3.1(c)(i) of this Chapter	

(3) Calculated Compressive Stress

The compressive stresses are given in the following formula:

$$\sigma_a = 10^5 \times \frac{M_t y}{I} \qquad \text{N/mm}^2$$

where:

σ_a	=	working compressive stress in panel being considered, but generally not less than the following: N/mm^2 $\frac{175}{CQ}\frac{SM_R}{SM_A}$ N/mm^2	
M_t	=	maximum total bending moment as given in 2.1.1(a)(ii)(5) of this Chapter kN-m	
y	=	vertical distance, from the neutral axis to the considered location	m
I	=	moment of inertia of the hull girder	cm^4
C, Q	=	applicable factor for steel or aluminum as defined in 2.1.1(a) of this Chapter	
SM_R	=	hull girder section modulus as required in 2.1 of this Chapter	cm^2-m
SM_A	=	section modulus of the hull girder at the location being considered	cm^2-m

(4) Permissible Buckling Stress

The design buckling stress, σ_c, of plate panels [as calculated in 2.3.1(c)(i)(2) of this Chapter] is to be such that:

$$\sigma_c \geq \sigma_a$$

(ii) Shear for Craft 61 m in Length and Over

(1) Ideal Elastic Buckling Stress

$$\tau_E = 0.9 m_2 E\left(\frac{t_b}{s}\right)^2 \qquad \text{N/mm}^2$$

where:

m_2	=	buckling coefficient as given in Table III 2-9 of this Chapter		
E	=	for steel:	2.06×10^5	N/mm^2
	=	for aluminum:	6.9×10^4	N/mm^2
t_b	=	thickness of plating		mm
s	=	shorter side of plate panel		mm
l	=	longer side of plate panel		mm

(2) Critical Buckling Stress

The critical buckling stress in shear, τ_c, is determined as follows:

$$\tau_c = \tau_E \qquad \text{when } \tau_E \leq 0.5\tau_y$$

$$\tau_c = \tau_y\left(1 - \frac{\tau_y}{4\tau_E}\right) \qquad \text{when } \tau_E > 0.5\tau_y$$

where:

τ_y = minimum shear yield stress of material N/mm^2

= $\frac{\sigma_{yw}}{\sqrt{3}}$

σ_{yw} = welded yield strength of material N/mm^2

τ_E = ideal elastic buckling stress calculated in 2.3.1(c)(ii)(1) of this Chapter N/mm^2

(3) Calculated Shear Stress

The working shear stress, τ_a, in the side shell or longitudinal bulkhead plating is to be calculated by an acceptable and recognized method.

(4) Permissible Buckling Stress

The design buckling stress, τ_c, of plate panels [as calculated in 2.3.1(c)(ii)(2) of this Chapter] is to be such that:

$$\tau_c \geq \tau_a$$

Table III 2-9
Buckling Coefficients m_1 and m_2

A Uniaxial Compression

1. Plates with longitudinal framing, $l \geq s$

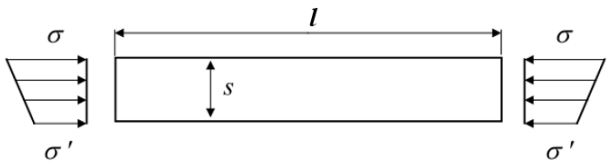

a. for $\sigma' = \sigma$, $m_1=4$
b. for $\sigma' = \sigma/3$, $m_1=5.8$
c. For intermediate values m_1 may be obtained by interpolation between a and b

2. Plates with transverse framing, $l \geq s$

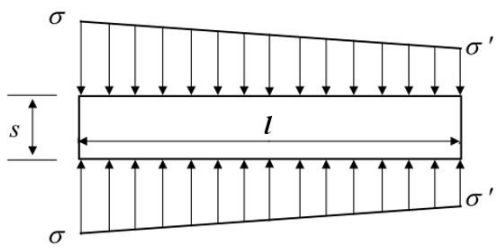

a. for $\sigma' = \sigma$, $m_1=C_2[1+(s/l)^2]^2$
b. for $\sigma' = \sigma/3$, $m_1=1.45C_2[1+(s/l)^2]^2$
c. For intermediate values m may be obtained by interpolation between a and b

Values of C_2 = 1.30 where supported by floors or deep members
= 1.21 where stiffeners are T-sections or angle bars
= 1.10 where stiffeners are bulb plates
= 1.05 where stiffeners are flat bars

B Edge Shear

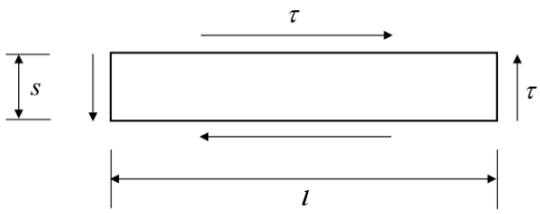

$m_2 = 5.34+4(s/l)^2$

(d) Waterjet Tunnels and Transverse Thruster Tubes

(i) Waterjet Tunnels

The thickness for the waterjet tunnel plating is to be not less than required by 2.3.1(b) of this Chapter, neither is it to be less than the greater of the jet manufacturer's recommended thickness or that obtained from the following equation:

$$t = s\sqrt{\frac{p_t k}{1000\sigma_a}} \quad \text{mm}$$

where:

p_t = maximum positive or negative tunnel design pressure, as provided by the jet manufacturer kN/m^2

s, k and σ_a are as given in 2.3.1(b) of this Chapter.

(ii) Transverse Thruster Tunnels

The thickness of the tunnel plating for the transverse thrusters is to be not less than required by 2.3.1(b) of this Chapter, nor less than obtained from the following equation:

$$t = 0.008d\sqrt{Q} + 3.0 \quad \text{mm}$$

where:

d = inside diameter of the tunnel, but is taken as not less than 968 mm mm

Q is as given in 2.1.1(a) of this Chapter

(e) Decks Provided for the Operation or Stowage of Vehicles

Where provision is to be made for the operation or stowage of vehicles having rubber tires, and after all other requirements are met, the thickness of deck plating is to be not less than obtained from the following equation:

$$t = \sqrt{\frac{\beta W(1 + 0.5n_{xx})}{\sigma_a}} \quad \text{mm}$$

where:

W = static wheel load N

n_{xx} = average vertical acceleration at the location under consideration as defined in 2.2.1(a) of this Chapter

β = as given in Fig. III 2-11 of this Chapter

σ_a = design stress for decks, given in Table III 2-8 of this Chapter N/mm^2

For wheel loading, strength deck plating thickness is to be not less than 110% of that required by the above equation, and platform deck plating thickness is to be not less than 90% of that required by the above equation.

Where the wheels are close together, special consideration will be given to the use of combined imprint and load. Where the intended operation is such that only the larger dimension of the wheel imprint is perpendicular to the longer edge of the plate panel, then b below may be taken as the smaller wheel imprint dimension, in which case, a is to be the greater one.

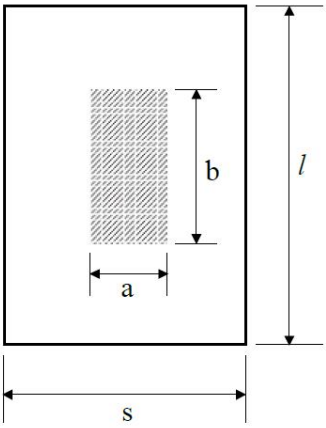

a/s \ l/s, b/s	l/s = 1						l/s = 1.4						l/s ≥ 2					
	0	0.2	0.4	0.6	0.8	1	0	0.2	0.4	0.8	1.2	1.4	0	0.4	0.8	1.2	1.6	2
0		1.82	1.38	1.12	0.93	0.76		2.00	1.55	1.12	0.84	0.75		1.64	1.20	0.97	0.78	0.64
0.2	1.82	1.28	1.08	0.90	0.76	0.63	1.78	1.43	1.23	0.95	0.74	0.64	1.73	1.31	1.03	0.84	0.68	0.57
0.4	1.39	1.07	0.84	0.72	0.62	0.52	1.39	1.13	1.00	0.80	0.62	0.55	1.32	1.08	0.88	0.74	0.60	0.50
0.6	1.12	0.90	0.74	0.60	0.52	0.43	1.10	0.91	0.82	0.68	0.53	0.47	1.04	0.90	0.76	0.64	0.54	0.44
0.8	0.92	0.76	0.62	0.51	0.42	0.36	0.90	0.76	0.68	0.57	0.45	0.40	0.87	0.76	0.63	0.54	0.44	0.38
1	0.76	0.63	0.52	0.42	0.35	0.30	0.75	0.62	0.57	0.47	0.38	0.33	0.71	0.61	0.53	0.45	0.38	0.30

Notes:

s = spacing of deck beams or deck longitudinals mm
l = length of plate pane mm
a = wheel imprint dimension, paralleled to the shorter edge, s, of the plate panel mm
b = wheel imprint dimension, parallel to the longer edge, *l*, of the plate panel mm

Fig. III 2-11
Values for β

2.3.2 Aluminum Extruded Planking, Aluminum Sandwich Panels and Corrugated Panels

(a) Aluminum Extruded Planking

Extruded planking is to be reviewed similar to a conventional stiffener and plate combination. The required thickness of the planking between stiffeners is given in 2.3.1(b) and 2.3.1(c) of this Chapter. For box and truss type extrusion, the plate spacing is to be taken as the maximum unsupported span of plate as indicated in Fig. III 2-12 of this Chapter. The stiffeners on the planking are to comply with the requirements in 2.4.1(b), 2.4.1(c) and 2.4.1(d) of this Chapter. The geometry of stiffeners in box and truss type extrusions is as indicated in Fig. III 2-12 of this Chapter. The individual planking pieces are to be attached by continuous welding for the main deck and can be welded intermittently for interior accommodation decks. The intermittent weld for the interior decks is to be sized in accordance with 2.5 of Part II for beams and stiffeners to deck. The use of adhesives for attaching planking members used for weather coverings is to be specially considered.

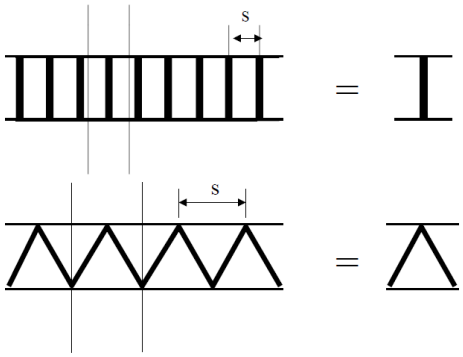

Fig. III 2-12
Extruded Planking

(b) Aluminum Sandwich Panels

An aluminum sandwich panel is a panel with thin aluminum skins attached to a thicker core material. These panels are to be typically used on enclosed decks or bulkheads. Where exposed panels are proposed the effects due to heat and the coefficients of thermal expansion are to be addressed. In general, the inner and outer skins are to be of the same thickness. The use of aluminum sandwich panels for helicopter decks and wheel loading will be specially considered. Aluminum sandwich panels are to comply with the equations given below:

(i) Section Modulus of Skins

The section modulus about the neutral axis of a strip of sandwich panel, 1 cm wide is not to be less than the following equation:

$$\mathrm{SM} = \frac{s^2 pk}{6 \times 10^5 \sigma_a} \qquad \mathrm{cm}^3$$

where:

s	=	spacing of the shell or deck longitudinals or superstructure, deckhouse or bulkhead stiffener. It is always to be the lesser dimension of the unsupported plate panels	mm
p	=	design pressure, given in 2.2 of this Chapter	kN/m^2
k	=	coefficient varying with plate panel aspect ratio, given in Table III 2-7 of this Chapter	
σ_a	=	design stress, given in Table III 2-8 of this Chapter	kN/m^2

(ii) Moment of Inertia of Skins

The moment of inertia about the neutral axis of a strip of sandwich panel, 1 cm wide is not to be less than the following equation:

$$I = \frac{s^3 pk_1}{120 \times 10^5 \cdot 0.24E} \qquad \mathrm{cm}^4$$

where:

s	=	spacing of the shell or deck longitudinals or superstructure, deckhouse or bulkhead stiffener. It is always to be the lesser dimension of the unsupported plate panels	mm
p	=	design pressure, given in 2.2 of this Chapter	
k_1	=	coefficient varying with plate panel aspect ratio, given in Table III 2-7 of this Chapter	
E	=	for aluminum: 6.9×10^4	N/mm^2

(iii) Core Shear Strength

The thickness of core and sandwich is to be not less than given by the following equation:

$$\frac{d_0 + d_c}{2} = \frac{vps}{1000\tau} \qquad \text{mm}$$

where:

d_o	=	overall thickness of sandwich	mm
d_c	=	thickness of core	mm
v	=	coefficient varying with plate panel aspect ratio, given in Table III 2-12 of this Chapter	
s	=	lesser dimension of plate panel	mm
p	=	design pressure, as defined in 2.2 of this Chapter	kN/m^2
τ	=	design stress, as shown in Table III 2-13 of this Chapter	N/mm^2

(iv) Testing

The core material and the attachment of the skins to the core are to be tested in accordance with the requirements of Rules and Regulations for the Construction and Classification of Ships of Fibreglass Reinforced Plastics 2019.

(v) Attachment

Typically, beams and stiffeners are not to be considered as effectively attached. Panels are not to be welded to unless the possible damage from heat is addressed. The panels are to be bolted to surrounding structure. The use of adhesives will be specially considered.

(c) Corrugated Panels

(i) Plating

The plating of corrugated panels is to be of the thickness required by 2.3.1(b) of this Chapter with the following modification. The spacing to be used is the greater of dimensions a or c as indicated in Fig. III 2-15 of this Chapter.

2.3.3 Fiber Reinforced Plastic

(a) General

The shell, decks and bulkheads may be either single skin or sandwich construction. Where both are used, a suitable transition is to be obtained between them with a minimum 12:1 taper ratio.

The bottom shell is to extend to the chine or upper bilge turn. A suitable transition is to be obtained between the bottom and side shell plating. The shell thickness in way of the keel is to be 50% greater and in way of shaft struts and skegs is to be 100% greater than the thickness required by 2.3.3(c)(i) or 2.3.3(c)(ii) of this Chapter, as applicable. For this purpose, pressure P_b as obtained from 2.2.1(a) or 2.2.2(a) of this Chapter and actual frame spacing at the location of the member are to be used for 2.3.3(c)(i) of this Chapter. Suitable framing reinforcement is to be provided in way of shaft struts. Bow thruster tube thickness is to be equivalent to the surrounding shell thickness.

The shell, deck or bulkhead laminates may be bi-directional (having essentially same strength and elastic properties in the two in-plane principal axes of the shell, deck or bulkhead) or uni-directional (having different strength or elastic properties in the two principal axes of the shell, deck or bulkhead panels). Bonding angles or tapes are to have essentially same strength and elastic properties as the plating laminate being bonded, and are in general to be in accordance with 2.6 of this Chapter.

(b) Fiber Reinforcement

The basic laminate given in Part II, Chapter 1 or other approved laminate of glass, aramid or carbon fiber in mat, woven roving, cloth, knitted fabric or non-woven uni-directional reinforcing, plies may be used. Equivalent strength and thickness of other than E-glass base laminate is to be assessed in a laminate stack program on the basis of first ply failure. For the shell and deck a sufficient number of plies are to be laid-up with the warp in the 0° (longitudinal) axis. Warp and fill directions are to be aligned parallel to the respective edges of the shell and deck panels as closely as practicable. Depending on the directionality and fiber orientation of these plies, other plies may be required or permitted in the 90° (transverse) axis; reinforcing plies in other axes such as +45° (diagonal) may also be used, when approved.

Where the strength and stiffness in the two principal axes of the panel are different, panel bending in each of the panel principal axes is to be considered. See 2.3.3(c)(ii) and 2.3.3(d)(ii) of this Chapter.

(c) Single Skin Laminate

(i) With Essentially Same Properties in 0° and 90° Axes

The thickness of the shell, deck or bulkhead plating is to be not less than given by the following equations:

(1) All plating

$$t = sc\sqrt{\frac{pk}{1000\sigma_a}} \quad \text{mm}$$

(2) All plating

$$t = sc\sqrt[3]{\frac{pk_1}{1000k_2E_F}} \quad \text{mm}$$

(3) Strength deck and shell

$$t = k_3(c_1 + 0.26L)\sqrt{q_1} \quad \text{mm}$$

L is generally not to be taken less than 12.2 m.

(4) Strength deck and bottom shell

$$t = \frac{s}{k_b}\sqrt{\frac{0.6\sigma_{uc}}{E_c}}\sqrt{\frac{SM_R}{SM_A}} \quad \text{mm}$$

where:

s	=	spacing of the shell or deck longitudinals or superstructure, deckhouse or bulkhead stiffeners. It is always to be the lesser dimension of the unsupported plate panels mm	
c	=	factor for plate curvature in the direction parallel to s, given by (1 – A/s), but is not to be taken less than 0.70	
A	=	distance measured perpendicular from the chord length, s, to the highest point of the curved plate arc between the panel edges	mm
p	=	design pressure given in 2.2 of this Chapter	
k or k_1	=	coefficient varying with plate panel aspect ratio, given in Table III 2-7 of this Chapter	
k_b	=	2.5 with longitudinal framing	
	=	2.5 with transverse framing and panel aspect ratio of 1.0	
	=	1.0 with transverse framing and panel aspect ratio 2.0 to 4.0	
σ_a	=	design stress given in Table III 2-10 of this Chapter	
k_2	=	for bottom plating: 0.015 for patrol boats and similar service craft, 0.01 for other craft	
	=	for side plating: 0.020 for patrol boats and similar service craft, 0.015 for other craft	
	=	for superstructures and deckhouse fronts: 0.025	
	=	for other plating: 0.010	
E_F	=	flexural modulus of laminate, in the direction parallel to s	N/mm^2
q_1	=	170/F	
L	=	craft length, as defined in 1.1.2 of this Part m	
c_1	=	5.7 mm	
k_3	=	1.2 for bottom shell structure	
	=	1.0 for side shell and deck structure	
E_c	=	compressive modulus of elasticity N/mm^2	
F	=	minimum flexural strength of laminate N/mm^2	
σ_{uc}	=	minimum compressive strength of laminate N/mm^2	
SM_R	=	required hull-girder section modulus given in 2.1 of this Chapter	
SM_A	=	proposed hull-girder section modulus of midship section	

Table III 2-10
Design Stresses for FRP, σ_a

Bottom Shell	$0.33\sigma_u$
Side Shell	$0.33\sigma_u$
Decks	$0.33\sigma_u$
Superstructure and Deckhouses – Front, Side, Ends and Tops	$0.33\sigma_u$
Tank Bulkheads	$0.33\sigma_u$
Watertight Bulkheads	$0.50\sigma_u$

For single skin laminates:

σ_u = minimum flexural strength N/mm^2

For sandwich laminates:

σ_u = for shell or deck outer skin, minimum tensile strength N/mm^2
σ_u = for shell or deck inner skin, minimum compressive strength N/mm^2
σ_u = for bulkheads, lesser of tensile or compressive strength N/mm^2

Note: σ_u is to be verified from the approved test results. See 1.6 of Part II.

(ii) With Different Properties in 0° and 90° Axes

For laminates with different strength and elastic properties in the 0° and 90° axes where the strength is less or the stiffness greater in the panel direction perpendicular to s, the thickness is to be also not less than given by the following equations:

(1)

$$t = sc\sqrt{\frac{pk_s}{1000\sigma_{as}}} \quad \text{mm}$$

(2)

$$t = sc\sqrt{\frac{pk_l}{1000\sigma_{al}}}\sqrt[4]{\frac{E_l}{E_s}} \quad \text{mm}$$

where:

k_s, k_l = coefficient for plate panel aspect ratio, given in Table III 2-11 of this Chapter
σ_{as} = design stress, given in Table III 2-10 of this Chapter, based on strength properties in the direction parallel to s
E_s = flexural modulus of laminate, in the direction parallel to s N/mm^2
σ_{al} = design stress, given in Table III 2-10 of this Chapter, based on strength properties in the direction perpendicular to s
E_l = flexural modulus of laminate, in the direction perpendicular to s N/mm^2

s, c and p are as defined in 2.3.3(c) of this Chapter.

Table III 2-11
Aspect Ratio Coefficient for Isotropic Plates

$(l/s)\sqrt[4]{E_s/E_l}$	k_s	k_l
>2.0	0.500	0.342
2.0	0.497	0.342
1.9	0.493	0.342
1.8	0.487	0.342
1.7	0.479	0.342
1.6	0.468	0.342
1.5	0.454	0.342
1.4	0.436	0.342
1.3	0.412	0.338
1.2	0.383	0.333
1.1	0.348	0.323
1.0	0.308	0.308

(d) Sandwich Laminate

(i) Laminate with Essentially Same Bending Strength and Stiffness in 0° and 90° Axes

In general the outer and inner skins are to be similar in lay-up and in strength and elastic properties. Special consideration will be given where this is not the case. In general, single skin laminate is to be used in way of the keel and in way of hull appendages such as shaft struts, skegs and rudders and in way of deck fittings, bolted connections, and other areas of concentrated local loads.

The section modulus and moment of inertia about the neutral axis of a strip of sandwich panel, 1 cm wide are to be not less than given by the following equations:

(1)

$$SM_o = \frac{(sc)^2 pk}{6 \times 10^5 \sigma_{ao}} \qquad \text{cm}^3$$

(2)

$$SM_i = \frac{(sc)^2 pk}{6 \times 10^5 \sigma_{ai}} \qquad \text{cm}^3$$

(3)

$$I = \frac{(sc)^3 pk_1}{120 \times 10^5 k_2 E_{tc}} \qquad \text{cm}^4$$

where:

SM_o	=	required section modulus, to outer skin	cm^3
SM_i	=	required section modulus, to inner skin	cm^3
I	=	required moment of inertia	cm^4
σ_{ao}	=	design stress, for outer skin, given in Table III 2-10 of this Chapter, based on strength of outer skin in direction parallel to s	
σ_{ai}	=	design stress, for inner skin, given in Table III 2-10 of this Chapter, based on strength of inner skin in direction parallel to s.	
E_{tc}	=	0.5 (E_c + E_t)	
E_c	=	mean of compressive moduli of inner and outer skins	N/mm^2
E_t	=	means of tensile moduli of inner and outer skins	N/mm^2

s, c, p, k, k_1 and k_2 are as defined in 2.3.3(c) of this Chapter.

(ii) Laminates with Different Bending Strength and Stiffness in 0° and 90° Axes

Where the strength is less or the stiffness greater in the direction perpendicular to s, the section modulus and moment of inertia about the neutral axis of a strip of sandwich, 1 cm wide are also to be not less than given by the following equations:

(1) In direction parallel to s

$$SM_o = \frac{(sc)^2 pk_s}{6 \times 10^5 \sigma_{aso}} \qquad \text{cm}^3$$

(2) In direction parallel to *l*

$$SM_o = \frac{(sc)^2 pk_l}{6 \times 10^5 \sigma_{alo}} \sqrt{E_l/E_s} \qquad \text{cm}^3$$

(3) In direction parallel to s

$$SM_i = \frac{(sc)^2 pk_s}{6 \times 10^5 \sigma_{asi}} \qquad \text{cm}^3$$

(4) In direction parallel to *l*

$$SM_i = \frac{(sc)^2 pk_l}{6 \times 10^5 \sigma_{ali}} \sqrt{E_l/E_s} \qquad \text{cm}^3$$

(5) In direction parallel to s

$$\text{I} = \frac{(sc)^2 pk_1}{120 \times 10^5 k_2 E_s} \qquad \text{cm}^4$$

where:

SM_o	=	required section modulus, to outer skin	cm^3
SM_i	=	required section modulus, to inner skin	cm^3
k_l, k_s	=	modified coefficient for plate panel aspect ratio, given in Table III 2-11 of this Chapter	
σ_{aso}	=	design stress, for outer skin, given in Table III 2-10 of this Chapter, based on strength properties in direction parallel to s.	
σ_{alo}	=	design stress, for outer skin, given in Table III 2-10 of this Chapter, based on strength properties in direction perpendicular to s.	
σ_{asi}	=	design stress for inner skin, given in Table III 2-10 of this Chapter, based on strength properties in direction parallel to s.	
σ_{ali}	=	design stress, for inner skin, given in Table III 2-10 of this Chapter, based on strength properties in direction perpendicular to s.	
E_s	=	$0.5\ (E_{ts} + E_{cs})$	
E_l	=	$0.5\ (E_{tl} + E_{cl})$	
E_{ts}, E_{cs}	=	respectively, mean of tensile moduli of inner and outer skins, and mean of compressive moduli of inner and outer skins, in direction parallel to s	N/mm^2
E_{tl}, E_{cl}	=	respectively, mean of tensile moduli of inner and outer skins, and mean of compressive moduli of inner and outer skins, in direction parallel to *l*	N/mm^2

s, c, p, k_1, k_2 and E_{tc} are as defined in 2.3.3(c) of this Chapter.

(iii) Shear Strength

The thickness of core and sandwich laminate is to be not less than given by the following equation. Special consideration will be given where cores differing from those in Chapter 1 of Part II are proposed. See also 2.3.3(d)(v) of this Chapter for minimum thickness of skin.

$$\frac{d_0 + d_c}{2} = \frac{vps}{1000\tau} \qquad \text{mm}$$

where:

d_o	=	overall thickness of sandwich, excluding gel coat	mm
d_c	=	thickness of core	mm
v	=	coefficient varying with plate panel aspect ratio, given in Table III 2-12 of this Chapter. Where the elastic properties of the skins are different in the principal axes, v is to be taken not less than 0.5	
s	=	lesser dimension of plate panel	mm
p	=	design pressure, as defined in 2.2 of this Chapter	kN/m^2
τ	=	design stress, as shown in Table III 2-13 of this Chapter	N/mm^2

Where cores are scored to facilitate fitting, the scores are to be filled with putty or resin.

The density of polyvinyl chloride foam cores in the shell plating is to be not less than given in the following table:

Location	Density kg/m^3	Minimum Density kg/m^3
Bottom forward of $0.4L_{WL}$; V≥25kts	$4d_c$	120
Bottom forward of $0.4L_{WL}$; V< 25kts	$4d_c$	100
elsewhere; V≥25kts	$3d_c$	100
elsewhere; V< 25kts	$3d_c$	80
Side forward $0.4L_{WL}$	$2.5d_c$	100
elsewhere	$2.0d_c$	80

Table III 2-12
Coefficient v for FRP Sandwich Panels Shear Strength

Plate Panel Aspect Ratio *l*/s	v
>2.0	0.500
2.0	0.500
1.9	0.499
1.8	0.499
1.7	0.494
1.6	0.490
1.5	0.484
1.4	0.478
1.3	0.466
1.2	0.455
1.1	0.437
1.0	0.420

s = shorter edge of plate panel mm
l = longer edge of plate panel mm

Note:

(1) Values of v less than 0.5 may be used only where the inner and outer skins have essentially the same strength and elastic properties in the 0° and 90° axes.

Table III 2-13
Core Shear Design Strength

Core Material	Design Core Shear Strength
Balsa Wood	$0.3\tau_u$
PVC(1)	$0.4\tau_u$

Note:

(1) May be taken as $0.55\tau_u$ where sheer elongation exceeds 40%.

τ_u = minimum core shear strength N/mm^2

(iv) Skin Stability

The skin buckling stress σ_c, given by the following equation, is in general to be not less than $2.0\sigma_{ai}$ and $2.0\sigma_{ao}$.

$$\sigma_c = 0.6\sqrt[3]{E_s \cdot E_{cc} \cdot G_{cc}}$$

where:

E_s = compressive modulus of skins, in 0° and 90° in-plane axis of panel N/mm^2
E_{cc} = compressive modulus of core, perpendicular to skins N/mm^2
G_{cc} = core shear modulus, in the direction parallel to load N/mm^2

(v) Minimum Skin Thickness

After all other requirements are met, the skin thicknesses of laminates complying with basic laminate requirements of Chapter 1 of Part II are in general to be not less than given by the following equations:

$$t_{os} = 0.35k_3(C_1 + 0.26L) \quad \text{mm}$$

$$t_{is} = 0.25k_3(C_1 + 0.26L) \quad \text{mm}$$

where:

t_{os} = thickness of outer skin mm

t_{is} = thickness of inner skin mm
k_3 = 1.2 bottom shell
= 1.0 side shell and deck
C_1 = 5.7 mm
L = craft length, as defined in 1.1.2 of this Part, generally not to be taken as less than 12.2 m m

(vi) Wheel Loading

Special consideration will be given to the required thickness where provision is made for the operation or stowage of vehicles having rubber tires after all other requirements are met.

2.3.4 Plating Subject to Specific Payloads

A first principles analysis is to be performed for all plates that are subject to a specific load. The maximum stresses and deflections in these plates are not to exceed the stresses given in Table III 2-14 of this Chapter.

Table III 2-14
Maximum Stresses

		Steel	Aluminum	FRP	
				σ	δ
Human Load		---	---	$0.33\sigma_u$	0.01s
Helicopter Decks(2)	Overall Dist. Loading	$0.6\sigma_y$	$0.6\sigma_{yw}$	See Note (1)	See Note (1)
	Landing Impact Loading	σ_y	σ_{yw}	See Note (1)	See Note (1)
	Stowed Aircraft Loading	σ_y	σ_{yw}	See Note (1)	See Note (1)

σ_y = yield strength of steel N/mm^2
σ_{yw} = welded yield strength of aluminum N/mm^2
s = panel spacing

For single skin laminates:

σ_u = minimum flexural strength N/mm^2

For sandwich laminates:

σ_u = for shell or deck outer skin, minimum tensile strength N/mm^2
σ_u = for shell or deck inner skin, minimum compressive strength N/mm^2
σ_u = for bulkheads, lesser of tensile or compressive strength N/mm^2

σ_u is to be verified from the approved test results, see 1.6 of Part II.

Notes:

(1) Composites will be specially considered for use in this location.

(2) The minimum plate thickness is generally not to be less than obtained from the following:

Beam Spacing	t_s	t_{al}
460 mm	4.0 mm	$0.9t_s\sqrt{Q}$
610 mm	5.0 mm	$0.9t_s\sqrt{Q}$
760 mm	6.0 mm	$0.9t_s\sqrt{Q}$

t_s = required thickness for steel

t_{al} = required thickness for aluminum

Q = material factor as defined in 2.1.1(a) of this Chapter

2.4 Framing

2.4.1 Aluminum and Steel

(a) General

Structural arrangements and details are to be in accordance with 2.5 and 2.6 of this Chapter. The scantlings given in this section are minimum values. Direct analysis may be specifically required by the Rules or may be submitted by designers in support of alternative arrangements and scantlings.

(b) Strength and Stiffness

(i) Section Modulus

The ends of members are to be effectively attached to the supporting structure. The section modulus of each longitudinal, stiffener, transverse web, stringer and girder is to be not less than that given by the following equation:

$$\mathrm{SM} = \frac{83.3 \times psl^2}{\sigma_a} \qquad \mathrm{cm}^3$$

where:

p	=	design pressure, as given in 2.2.1 or 2.2.3 of this Chapter	kN/m^2
s	=	spacing, of the longitudinal, stiffener, transverse web or girder, etc.	m
l	=	length, of the longitudinal, stiffener, transverse web or girder, between supports; where bracketed end connections are supported by bulkheads, *l* may be measured onto the bracket, the distance as given on III 2-13 of this Chapter, provided both bracket arms are about the same length. Where transverse members span chines or "knuckles," *l* is to be measured as shown in Fig. III 2-13 and Fig. III 2-14 of this Chapter	m
σ_a	=	design stress, as given in Table III 2-15 of this Chapter	N/mm^2

Stiffeners without end attachments are permitted on watertight bulkheads provided the section modulus is increased by 50%, and provided the bulkhead plating and boundary can transmit the shear forces on the stiffeners.

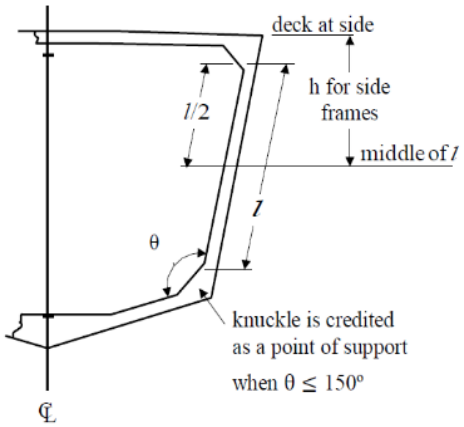

Fig. III 2-13
Transverse Side Frame

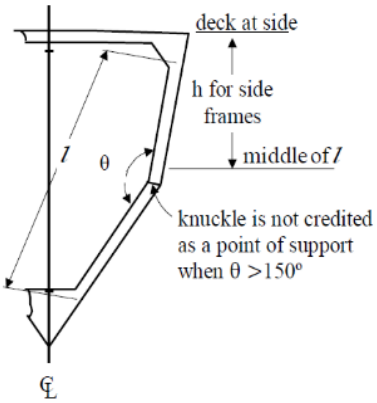

Fig. III 2-14
Transverse Side Frame

Table III 2-15
Design Stress, σ_a

Location	Steel and Aluminum	FRP
Bottom Longitudinals – Slamming Pressure	$0.65\sigma_y$	$0.33\sigma_u$
Bottom Longitudinals – Sea Pressure	$0.50\sigma_y$	$0.40\sigma_u$
Side Longitudinals – Slamming Pressure	$0.60\sigma_y$	$0.40\sigma_u$
Side Longitudinals – Sea Pressure	$0.50\sigma_y$	$0.40\sigma_u$
Deck Longitudinals – Strength Decks	$0.33\sigma_y$	$0.40\sigma_u$
Deck Longitudinals – Other Decks	$0.40\sigma_y$	$0.40\sigma_u$
Wet Deck Longitudinals	$0.75\sigma_y$	$0.40\sigma_u$
Bottom Transverses and Girders – Slamming Pressure	$0.80\sigma_y$	$0.33\sigma_u$
Bottom Transverses and Girders – Sea Pressure	$0.60\sigma_y$	$0.33\sigma_u$
Side Transverses and Girders – Slamming Pressure	$0.80\sigma_y$	$0.33\sigma_u$
Side Transverses and Girders – Sea Pressure	$0.60\sigma_y$	$0.33\sigma_u$
Deck Transverses and Girders – Strength Deck	$0.75\sigma_y$	$0.33\sigma_u$
Deck Transverses and Girders – Other Decks	$0.75\sigma_y$	$0.33\sigma_u$
Wet Deck Transverses and Girders	$0.75\sigma_y$	$0.33\sigma_u$
Watertight Bulkheads	$0.85\sigma_y$	$0.50\sigma_u$
Tank Bulkheads	$0.60\sigma_y$	$0.33\sigma_u$
Superstructure and Deckhouse	$0.70\sigma_y$	$0.33\sigma_u$

σ_y = minimum yield strength, unwelded condition N/mm^2
For aluminum, minimum yield stress, welded condition
σ_u = ultimate tensile strength N/mm^2

(ii) Moment of Inertia

The moment of inertia of each longitudinal, stiffener, transverse web, stringer or girder, including the plating to which it is attached, is to be not less than given by the following equation:

$$I = \frac{260psl^3}{K_4 E} \qquad \text{mm}^4$$

where

K_4	=	for shell and deep tank girders, stringers and transverse webs, constructed of steel.	
	=	for deck girders and transverses constructed of steel.	
	=	0.0021 for shell and deep tank stringers and transverse webs constructed of aluminum.	
	=	0.0018 for deck girder and transverses constructed of aluminum.	
E	=	2.06×10^5 for steel	N/mm^2
	=	6.9×10^4 for aluminum	N/mm^2

p, s and *l* are as given in 2.4.1(b)(i) of this Chapter.

(c) Elastic Buckling of Longitudinal Members

The moment of inertia of the deck or shell longitudinal together with attached plating is not to be less than to satisfy the following criteria:

(i) Axial Compression

The critical buckling stress σ_E of a beam-column (i.e., the longitudinal and the associated effective plating) with respect to axial compression may be obtained from the following equation:

$$\sigma_E = \frac{EI_a}{c_1 A l^2} \qquad \text{N/mm}^2$$

where:

E	=	as defined in 2.4.1(b)(ii) of this Chapter	
I_a	=	moment of inertia, of longitudinal, including plate flange	cm^4
c_1	=	1000	
A	=	cross-sectional area, of longitudinal, including plate flange	cm^2
l	=	span of longitudinal	m

(ii) Torsional/Flexural Buckling

The critical torsional/flexural buckling stress with respect to axial compression of a longitudinal including its associated plate may be obtained from the following equation:

$$\sigma_E = \frac{\pi^2 E I_w}{10 c_1 I_p l^2}\left(m^2 + \frac{K}{m^2}\right) + 0.385E\frac{I_t}{I_p} \qquad \text{N/mm}^2$$

where:

c_1	=	1000	
K	=	$c_2 \frac{C l^4}{\pi^4 E I_w}$	
m	=	1 for $0 < K \leq 4$	
	=	2 for $4 < K \leq 36$	
	=	3 for $36 < K \leq 144$	
	=	4 for $144 < K \leq 400$	
E	=	as defined in 2.4.1(b)(ii) of this Chapter	
c_2	=	10^6	
I_t	=	St. Venant's moment of inertia, in cm^4, of profile (without plate flange)	
	=	$c_3 \frac{h_w t_w^3}{3}$	for flat bars (slabs)
	=	$c_3 \frac{1}{3}\left[h_w t_w^3 + b_f t_f^3\left(1 - 0.63\frac{t_f}{b_f}\right)\right]$	for flanged profiles
c_3	=	10^{-4}	
I_p	=	polar moment of inertia, of profile about connection of stiffener to plate	cm^4
	=	$c_3 \frac{h_w^3 t_w}{3}$	for flat bars (slabs)

= $c_3\left(\frac{h_w^3 t_w}{3} + h_w^2 b_f t_f\right)$ for flanged profiles

I_w = warping constant, of profile about connection of stiffener to plate cm^6

= $c_4 \frac{h_w^3 t_w^3}{36}$ for flat bars (slabs)

= $c_4\left(\frac{t_f b_f^3 h_w^2}{12}\right)$ for "Tee" profiles

= $c_4 \frac{b_f^3 h_w^2}{12\left(b_f + h_w\right)^2}\left[t_f\left(b_f^2 + 2b_f h_w + 4h_w^2\right) + 3t_w b_f h_w\right]$ for angles and bulb profiles

c_4 = 10^{-6}

h_w = web height mm

t_w = web thickness mm

b_f = flange width mm

t_f = flange thickness mm

l = span of member m

C = spring stiffness exerted by supporting plate panel

= $\frac{k_p E t_p^3}{3s\left(1 + \frac{1.33 k_p h_w t_p^3}{s t_w^3}\right)}$ N

s = spacing of member mm

t_p = plate thickness mm

k_p = $1-\eta_p$, not to be taken less than zero

For flanged profiles k_p need not be taken less than 0.1.

η_p = $\frac{\sigma_a}{\sigma_{Ep}}$

σ_a = calculated compressive stress

For longitudinals, members see 2.4.1(c)(iv) of this Chapter

σ_{Ep} = elastic buckling stress of supporting plate as calculated in 2.3.1(c)(i)(1) of this Chapter

(iii) Critical Buckling Stress

The critical buckling stress in compression, σ_c, is determined as follows:

$\sigma_c = \sigma_E$ when $\sigma_E \leq 0.5\ \sigma_y$

$\sigma_c = \sigma_y\left(1 - \frac{\sigma_y}{4\sigma_E}\right)$ when $\sigma_E > 0.5\ \sigma_y$

where:

σ_y = yield strength of material N/mm^2

Note:

Generally the unwelded yield strength may be used, but due account is to be made for critical or extensive weld zones.

σ_E = ideal elastic buckling stress calculated in 2.4.1(c)(i) of this Chapter

(iv) Calculated Compressive Stress

$\sigma_a = 10^5 \times \frac{M_t y}{I}$ N/mm^2

where:

σ_a = working compressive stress in panel being considered, but generally not less than the following: N/mm^2

$\frac{175}{Q}\frac{SM_R}{SM_A}$ N/mm^2

M_t = maximum total bending moment as given in 2.1.1(a)(ii)(5) of this Chapter kN-m

y = vertical distance, from the neutral axis to the considered location m

I = moment of inertia of the hull girder cm^4

SM_R = hull girder section modulus, as required in 2.1 of this Chapter cm^2-m

SM_A = section modulus of the hull girder at the location being considered cm^2-m
Q = material factor as given in 2.1.1(a) of this Chapter

(v) Design Buckling Stress

The design buckling stress, σ_c, is to be such that:

$$\sigma_c \geq \beta \sigma_a$$

where:
β = 1.10 for the web plating of members
= 1.20 for overall buckling of members

(vi) Web and Flange Buckling

Local buckling is considered satisfactory provided the following proportions are not exceeded.

(1) Flat bars

$$\frac{d_w}{t_w} \leq 0.5 \left(\frac{E}{\sigma_y}\right)^{\frac{1}{2}} C_2$$

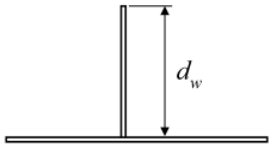

(2) Built-up Sections, Angle Bars and Tee Bars

$$\frac{d_w}{t_w} \leq 1.5 \left(\frac{E}{\sigma_y}\right)^{\frac{1}{2}} C_2$$

(3) Bulb Plates

$$\frac{d_w}{t_w} \leq 0.85 \left(\frac{E}{\sigma_y}\right)^{\frac{1}{2}} C_2$$

(4) Outstanding Face Bars and Flanges

$$\frac{d_w}{t_w} \leq 0.5 \left(\frac{E}{\sigma_y}\right)^{\frac{1}{2}} C_2$$

where:
t_w = total required thickness mm
d_w = depth of the web mm
E = as defined in 2.4.1(b)(ii) of this Chapter
σ_y = yield strength of material N/mm^2
Note:
Generally the unwelded yield strength may be used, but due account is to be made for critical or extensive weld zones.
C_2 = 1 where $\sigma_a > 0.80\sigma_y$
= where $\sigma_a < 0.80\sigma_y$, and σ_a is to be taken not less than $0.55\sigma_y$

For webs and flanges that do not satisfy these limits, a detailed analysis of buckling strength using an acceptable method is to be submitted for review.

(d) Corrugated Panels

(i) Stiffeners

The section modulus, SM, for corrugated bulkhead is to be not less than that obtained by the requirements in 2.4.1(b) of this Chapter with *l* being the distance between supporting members in m, and s is equal to a + b where a and b are as defined in Fig. III 2-15 of this Chapter, in m.

The developed section modulus, SM, may be obtained from the following equation, where a, t, and d are as indicated in Fig. III 2-15 of this Chapter.

$$SM = \frac{td^2}{6} + \left(\frac{adt}{2}\right)$$

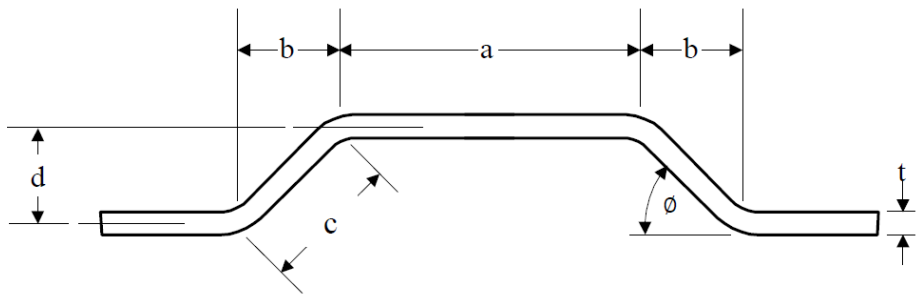

Fig. III 2-15
Corrugated Bulkhead

(ii) End Connections

The structural arrangements and size of welding at the ends of corrugations are to be designed to develop the required strength of corrugation stiffeners. Joints within 10% of the depth of corrugation from the outer surface of corrugation, d_1, are to have double continuous welds with fillet size, w, not less than 0.7 times the thickness of the bulkhead plating or penetration welds of equal strength (Fig. III 2-16 of this Chapter).

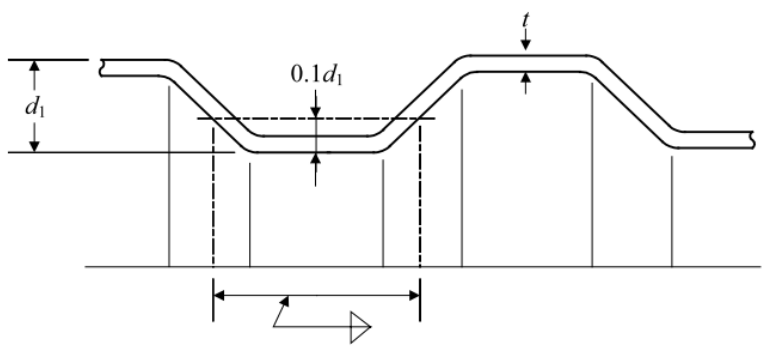

Fig. III 2-16
Corrugated Bulkhead End Connections

(e) Web Thickness

The thickness of the webs of structural members is not to be less than that determined by the following equation:

(i) Webs

$$t = \frac{d_w}{C}\sqrt{\frac{\sigma_y}{\sigma_d}}$$

where:

t_w	=	total required thickness	mm
d_w	=	depth of the web	mm
C	=	70 for steel members	mm
	=	50 for aluminum members	
σ_d	=	235 for steel members	N/mm^2
	=	127.6 for aluminum members	N/mm^2

The web thickness is also not to be less than the following:

$$t = \frac{1000psl}{2d_w\tau_a} \quad \text{mm}$$

where:

t	=	total required thickness	mm
p	=	design pressure, as given in 2.2 of this Chapter	kN/m^2
s	=	width of shell or deck supported by the member	m
l	=	length of member	m
d_w	=	depth of the web	mm
τ_a	=	design shear stress	N/mm^2
	=	$0.5\tau_y$ for steel structure and $0.5\tau_{yw}$ for aluminum structure For bottom primary structure $0.75\tau_y$ or $0.75\tau_{yw}$.	N/mm^2
τ_y	=	minimum shear, unwelded condition	N/mm^2
τ_{yw}	=	minimum shear yield strength, welded condition	N/mm^2

(f) Attachments

(i) Lug Attachments

The lug weld attachment of the longitudinals to the transverse webs are to have total weld throat area not less than the following equations:

$$a_w = \frac{1000psl}{2\tau_a} \quad \text{mm}^2$$

where:

a_w	=	$t_w \times l_w$	
t_w	=	weld throat	mm
l_w	=	total length of weld	mm
p	=	design pressure, as given in 2.2 of this Chapter	kN/m^2
s	=	width of shell or deck supported by the member	m
l	=	length of member	m
τ_a	=	design sheer stress, as defined in 2.4.1(e)(i) of this Chapter	N/mm^2

(ii) End Attachments

The welded end attachments of members, including bracket connections, are to develop the required strength of the member being attached, considering the member as fix ended.

(g) Direct Analysis Methods

Local structure may be designed using advanced analysis techniques such as non-prismatic beam, grillage, and finite element analysis. The requirements for the use of these types of analysis techniques are in 1.3 of this Part.

(h) Decks Exposed to Vehicle Loads

All longitudinals, beams, and girders of decks that are subject to vehicle loads are to be checked under all possible combinations of these loads. The maximum allowable design stress for these members are given in Table III 2-15 of this Chapter.

(i) Tripping Brackets and Stiffeners

Tripping brackets are to be fitted on girders and transverses at a spacing of about 3 m. Stiffeners are to be fitted as may be required.

2.4.2 Fiber Reinforced Plastic

(a) General

The structural arrangements and details are to be in accordance with 2.5 and 2.6 of this Chapter. Laminates may be bi-directional or uni-directional. Bonding angles or tapes are to comply with 2.5 of this Chapter. Laminates of webs, crowns and face bars of stiffeners, transverses and girders may be bi-directional, or multi-axial. Uni-axial caps may be used in the crowns and face bars of these members. In general, the tapes bonding the members, and their secondary bonds, are to develop the strength of the member being attached.

(b) Fiber Reinforcement

The basic laminate given in Part II, Chapter 1, or other approved laminates of glass, aramid, or carbon fiber, in mat, woven roving, cloth, knitted fabric, or non-woven uni-directional reinforcing plies may be used. The plies are in general to be laid-up parallel to the direction of the internal. The strength of the laminate in a direction perpendicular to the direction of the internal is in general not to be less than 25% of the warp strength except for the uni-directional caps of the flange or crown of the internal members. In way of continuous longitudinal members, the required section modulus, shear area and moment of inertia of transverse members are to be maintained by the shell or deck plating and that part of the transverse member that is continuous over the longitudinal member.

Where higher strength or higher modulus plies are used in the flange or crown of the internal, it may be advisable to provide similar higher strength, higher modulus local plies in the shell or deck plating, in the direction parallel to the internal to balance the strength and stiffness of the high strength and high modulus plies in the flange or crown of the internal.

(c) Strength and Stiffness

(i) Section Modulus

The section modulus of each longitudinal, stiffener, transverse web and girder including the plating to which it is attached is to be not less than given by the following equation:

$$\mathrm{SM} = \frac{83.3 \times psl^2}{\sigma_a} \qquad \mathrm{cm}^3$$

where p, s, l and σ_a are defined in 2.4.1(b) of this Chapter.

Where the shell, deck or bulkhead plating, and the webs and flange and crown of the member are of different strength or elastic property plies, consideration is to be given to the effect of the different moduli plies in calculating the moment of inertia and section modulus; the required section modulus is to be considered for each different strength laminate of the member.

(ii) Moment of Inertia

The moment of inertia of each longitudinal, stiffener, transverse web, stringer or girder, including the plating to which it is attached, is to be not less than given by the following equation:

$$I = \frac{260psl^3}{K_4 E} \qquad \mathrm{cm}^4$$

where:

K_4 = for shell and deep tank girders, stringers and transverse webs.
= 0.004 for deck girders and transverses.
= 0.010 for all other members.

E = tensile or compressive modulus representative of the basic value used in the moment of inertia calculation N/mm^2

p, s and l are as given in 2.4.1(b) of this Chapter.

(iii) Shear Area

The web area, A, of the member is to be not less than that given by the following equation:

$$A = \frac{1000psl}{2\tau} \qquad \text{mm}^2$$

where:

A	=	net web area, at location being considered	mm^2
τ	=	design shear stress, to be taken not greater than $0.4\tau_u$	N/mm^2
τ_u	=	lesser of ultimate shear strength, in either warp or fill of the web laminate	N/mm^2

p, s and *l* are as given in 2.4.1(b) of this Chapter.

Consideration will be given to determining the web area using more detailed methods of determining the shear stress in the web at the neutral axis of the member.

(d) Proportions

The thickness of webs and flanges are to be in accordance with 2.6 of this Chapter.

(e) Buckling

(i) Single Skin Laminate

Where single skin laminate members are subject to in-plane compressive loading likely to cause axial overall or local buckling, design calculations are to be submitted to show the margin against buckling failure.

(ii) Sandwich Laminates

Where sandwich laminate members are subject to in-plane compressive loading, likely to cause axial overall or local buckling of the sandwich, or of the sandwich skins, design calculations are to be submitted to show the margin against buckling failure.

2.4.3 Stanchions

(a) General

The structure under stanchions is to be of sufficient strength to distribute the loads effectively. Stanchions between each tier of decks shall be alligned to each other as far as practicable; where this is not practicable, effective means are to be provided for transmitting the loads to the structure below. Stanchions in double bottoms and under the tops of deep tanks are to be metal and solid in cross section. Stanchions are in general not to be used in the bottom or double bottom structures where subject to high impact loads in service.

(b) Stanchion Analysis

The load, W, on a given stanchion is to be developed from the end reaction from the girders that the stanchion supports. These end reactions are to be developed considering the design pressure for the deck in which they are located plus any point loads from stanchions located on the girder. When cascading the stanchion loads through the structure, the analysis is to consider the load from the deck directly above the stanchion plus the loads from all complete decks and one-half the load from all partial or deckhouse decks. The requirement in 2.4.3(c) of this Chapter is given for a simple stanchion that will only need to support the deck directly above. In general, stanchions are to have sectional area not less than 1.015W cm^2 where the stanchions are subject to tension loads.

(c) Stanchion Load

The load on a stanchion is to be obtained from the following equation:

$$W = pbs \qquad \text{kN}$$

where:

W	=	load	kN

b	=	mean breadth, of area supported	m
s	=	mean length, of area supported	m
p	=	design pressure, as given in 2.2 of this Chapter	kN/m^2

(d) Permissible Load

The load a stanchion may carry is to be equal to or greater than the load on the stanchion obtained in 2.4.3(b) of this Chapter. This permissible load is to be obtained from the following equations:

(i) Steel Stanchions

$$W_a = \left(k - \frac{nl}{r}\right) A \qquad \text{kN}$$

(ii) Aluminum-Alloy Stanchions

$$W_a = \frac{\left(10.00 - \frac{5.82l}{r}\right) A\sigma_y}{165} \qquad \text{kN}$$

where:

W_a	=	permissible load	kN
k	=	12.09 ordinary strength steel	
	=	16.11 HT32 strength steel	
	=	18.12 HT36 strength steel	
n	=	4.44 ordinary strength steel	
	=	7.47 HT32 strength steel	
	=	9.00 HT36 strength steel	
r	=	least radius of gyration of stanchion	cm
A	=	area of stanchion	cm^2
l	=	unsupported length of stanchion	m
σ_y	=	minimum yield strength of welded aluminum under consideration	N/mm^2

The adoption of aluminum test values higher than given in Part II, Chapter 2 will be subject to special consideration.

(e) FRP Stanchions

FRP stanchions will be subject to special consideration.

(f) Support by Bulkheads

Bulkheads supporting girders or bulkheads fitted in lieu of stanchions are to be stiffened to provide support not less effective than required for stanchions.

2.4.4 Internals Subject to Specific Payloads

A first principles analysis is to be performed for all internals that are subject to a military mission load. The maximum stresses in these plates are not to exceed the values as given in Table III 2-16 of this Chapter.

Table III 2-16
Maximum Stresses

		Steel	Aluminum	FRP	
				σ	δ
Human Load		---	---	$0.33\sigma_u$	0.01s
Helicopter Decks	Overall Dist. Loading	$0.6\sigma_y$	$0.6\sigma_{yw}$	See Note (1)	See Note (1)
	Landing Impact Loading Beams	σ_y	σ_{yw}	See Note (1)	See Note (1)
	Landing Impact Loading Girders, Stanchions, or Truss Supports (2)	$0.9\sigma_y$	$0.9\sigma_{yw}$	See Note (1)	See Note (1)
	Stowed helicopter Loading Beams	$0.9\sigma_y$	$0.9\sigma_{yw}$	See Note (1)	See Note (1)
	Stowed helicopter Loading Girders, Stanchions, or Truss Supports (2)	$0.8\sigma_y$	$0.8\sigma_{yw}$	See Note (1)	See Note (1)

σ_y = yield strength of steel N/mm^2
σ_{yw} = welded yield strength of aluminum N/mm^2
s = panel spacing
σ_u = ultimate tensile strength N/mm^2

Notes:

(1) Composites will be specially considered for use in this location.

(2) For members subjected to axial compression, the factor of safety is to be based on the yield stress or critical buckling stress, whichever is less.

2.5 Hull Structural Arrangement

2.5.1 Structural Arrangement – All Materials

(a) Framing, Webs, Girders, and Non-tight Structural Bulkheads

(i) General

The shell, main deck, and the sides and tops of long superstructures are in general to be longitudinally framed; depending on craft length, speed and structural stability, craft may also be transversely framed. On transversely framed craft, it is to be clearly indicated that the structure has a continuous load path that eliminates hard spots on unsupported structure.

Bulkheads, partial bulkheads or web frames are to be arranged in the main hull and in long superstructures or deckhouses to provide effective transverse rigidity. Bulkheads or deep web frames are to be provided in the main hull under the ends of superstructures or deckhouses.

Longitudinals are to be supported by transverse web frames, transverse bulkheads or other transverse structure. For craft over 61 m in length, or on craft where the longitudinals need to be included in the offered longitudinal strength calculation to meet the requirements in 2.1.1 of this Part, the longitudinals are to be continuous in way of transverse supporting members, including transverse bulkheads. All other craft may have longitudinals intercostal to the transverse bulkheads provided that continuity of strength and end fixity are maintained in accordance with 1.2.3(e) of this Part and 2.5.1(a)(ii) of this Chapter. Craft that are under 30.5 m in length, and where the longitudinals do not need to be included in the offered longitudinal strength calculation to meet the requirements in 2.1.1 of this Chapter, may have longitudinal stiffeners that are intercostal to the transverse supporting members and bulkheads providing that continuity of strength and end fixity are maintained in accordance with 1.2.3(e) of this Part and 2.5.1(a)(ii) of this Chapter. For craft with transverse framing, deck and bottom girders are to be provided.

Girders may be intercostal at transverse bulkheads provided continuity of strength is maintained and end fixity is provided in accordance with 1.2.3(e) of this Part and 2.5.1(a)(ii) of this Chapter.

Transverses are to be arranged as continuous web rings and girders are to be aligned with stiffeners at bulkheads. Alternative arrangements that provide fixity at the ends of transverses and girders will be specially considered.

(ii) Attachments and Stiffening

At supporting members, the attachment of all internal structural members is to provide end fixity and effective load transmission. Special consideration will be given to reduced end fixity where the alternative structure has equivalent strength.

The webs of all members are to be effectively attached to the shell, deck or bulkhead plating, to their supporting members and to face bars.

(iii) Engines, Machinery, and other Foundations

The foundations of engines and associated machinery are to be installed to the manufacturer's recommendations. These foundations are to be constructed to withstand the loads imparted by the equipment they support under the worst intended operating conditions. The rigidity of foundations and supporting structure is to be sufficient to prevent misalignment, deflection, or vibration, which would interfere with the operation of the equipment.

Foundations supporting waterjets will be specially considered.

Where main engine girders are part of the longitudinal strength of the craft, there is to be continuity of strength and transition to smaller longitudinals. The flanges of engine girders are to be tripped at each transverse frame. All changes of engine girder web depth are to be gradual. The angle of this transition is not to exceed 45°.

Foundations of auxiliary equipment are to be similar to that of engine foundations. They are to provide for secure attachment of the equipment and are to be effectively attached to the hull structure.

Crane and davit foundations are to be capable of withstanding the axial load and the maximum overturning moments specified by the crane manufacturer.

The foundations for anchor winches or windlasses are to be designed in accordance with the requirements in 5.1.6(b) of this Part.

Structural members of all foundations are not to be punched or drilled for the attachment of equipment or fittings. Brackets, margin plates, special framing, or weld studs are to be attached to the structure and the components mounted on them and not directly on the structure.

All connections that are constructed with the use of a bi-metallic connection are to be in accordance with 2.6.1(a)(vi) and 2.13.2 of this Chapter.

(b) Watertight Bulkheads

(i) General

All vessels having lengths, L, equal to or exceeding 15 m (50 ft) are to be provided with watertight bulkheads in accordance with this section. The plans submitted are to clearly show the location and extent of each watertight bulkhead.

(ii) Openings and Penetrations

The number of openings in watertight subdivisions is to be kept to a minimum, compatible with the design and proper working of the vessel. Where penetrations of watertight bulkheads and internal deck are necessary for access, piping, ventilation, electrical cables, etc., arrangements are to be made to maintain the watertight integrity. Relaxation in the watertightness of openings above the freeboard deck may be considered, provided it is demonstrated that any progressive flooding can be easily controlled and that the safety of the vessel is not impaired.

Ventilation penetrations through watertight subdivision bulkheads are to be avoided. Where penetrations are unavoidable, the ventilation ducting is to satisfy watertight bulkhead requirements or watertight closing appliances are to be installed at the bulkhead penetrations. For ventilation penetrations below the bulkhead deck or below damage equilibrium waterlines, the closing appliances are to be operable from the bridge. Otherwise, local, manual controls may be provided.

(iii) Collision Bulkhead

Craft having a length, as defined in 1.1 of this Part, of or exceeding 15 m are to be provided with a collision bulkhead fitted not less than $0.05L_f$ abaft the stem at the design load waterline. At no point on vessels having 500 or more gross tonnage, except as specially permitted, is it to be further than $0.08L_f$ or $0.05L_f$+3 m, whichever is greater, from the reference point. The bulkhead is to be intact except for approved pipe penetrations, and are to extend to the main weather deck preferably in one plane. In craft having long superstructures at the forward end, the bulkhead is to be extended weathertight to the superstructure deck. Provided the extension is not less than 0.05L abaft the stem at the design load waterline, they need not be fitted directly over the collision bulkhead. In such cases, the part of the deck forming the step is to be weathertight.

On vessels with bow-doors, that part of their sloping loading ramps that form part of the extension of a collision bulkhead and are more than 2.3 m above the freeboard deck may extend forward of the limit below.

(iv) Reference Point

The reference point in determining the location of the collision bulkhead is the forward end of L_f except that in the case of vessels having any part of the underwater body, such as the bulbous bow, extending forward of the forward end of L_f, the required distances are to be measured from a reference point located a distance forward of the forward end of L_f. This distance, x, is the lesser of the following (see Fig. III 2-17 of this Chapter):

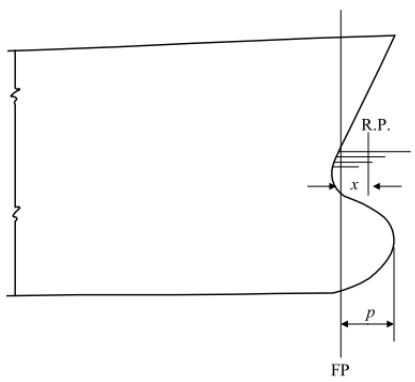

Fig. III 2-17
Reference Point of Vessels with Bulbous Bow

(1) Half the distance between the forward end of L_f and the extreme forward end of the extension, p/2 or

(2) $0.015L_f$

(3) 3 m

where L_f is as defined in 1.1.3 of this Part.

The forward end of L_f is to coincide with the fore side of the stem on the waterline at which L_f is measured.

(v) Engine Room

The engine room is to be enclosed by watertight bulkheads extending to the main weather deck.

(vi) Chain Locker

For craft with length L (as defined in 1.1.2 of this Part) greater than 24 meters, chain lockers and chain pipes are to be made watertight up to the weather deck. The arrangements are to be such that accidental flooding of the chain locker cannot result in damage to auxiliaries or equipment necessary for the proper operation of the craft nor in successive flooding into other spaces. Bulkheads between separate chain lockers not forming a part of subdivision bulkhead (see Fig. III 2-18 of this Chapter), or bulkheads which form a common boundary of chain lockers (see Fig. III 2-19 of this Chapter), need not be watertight.

Where means of access into chain lockers are provided, they are to be closed by a substantial cover secured by closely spaced bolts. Doors are not permitted.

Where a means of access to chain lockers is located below the weather deck, the access cover and its securing arrangements are to be in accordance with recognized standards (such as ISO 5894-1999), or equivalent for watertight manhole covers. Butterfly nuts and/or hinged bolts are prohibited as the securing mechanism for the access cover.

For closure of chain pipes, see 2.9.12(d) of this Chapter.

The arrangements on craft that are not subject to the International Convention on Load Lines or its Protocol may be specially considered.

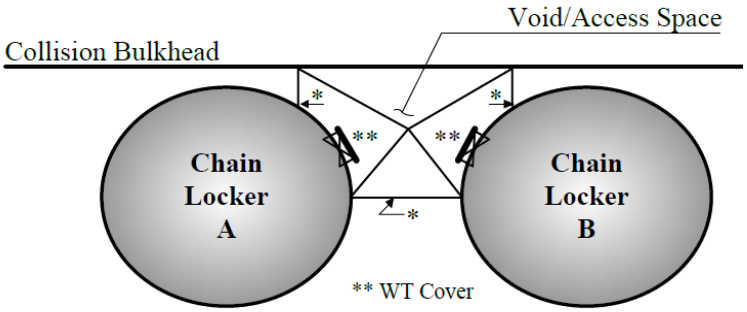

Fig. III 2-18

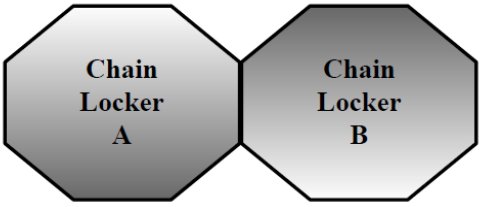

Fig. III 2-19

(c) Tanks

The arrangements of all tanks, their intended service, and the heights of the overflow pipes are to be indicated clearly on the drawings submitted for approval. As a minimum, all gravity fill integral or independent tank structures shall meet the design criteria for plating and framing in 2.3 and 2.4 of this Chapter considering the maximum head pressure imposed on the peripheries.

Where potable water tanks are fitted, water closets are not to be installed on top of the tanks nor are soil lines to run over the tops of the tanks. Pipes containing non-potable liquids are not to be run through the tanks. Attention is directed to the requirements of the national authorities that might govern the location, construction or design of such tanks.

Baffle or swash plates are to be provided. Special consideration may be given for the omission of baffle or swash plates providing the effects of fluid slamming on the plate are considered.

Scantlings of pressurized tanks will be subject to special consideration.

All tanks and void spaces are to be accessible for inspection and repair.

(d) Decks

Where a deck is stepped or has a break, suitable scarphing or brackets are to be provided at the side shell.

Decks passing into superstructures within the 0.5L amidships are to be increased in way of the break. See 2.1.1(d)(iv) of this Chapter.

(e) Means of Escape

All main hull spaces are to have two means of escape to the main weather deck. These escapes are to be located as far apart as practicable and are to be operable from both sides. All escape routes are to be readily accessible and unobstructed.

(f) Double Bottoms

(i) General

Inner bottoms are to be fitted fore and aft between the peaks or as near thereto as practicable in vessels of ordinary design of 500 GT or over. Where, for special reasons, it may be desired to omit the inner bottom, the arrangements are to be clearly indicated on the plans when first submitted for approval. A double bottom need not be fitted in way of deep tanks, provided the safety of the vessel in the event of bottom damage is not thereby impaired. It is recommended that the inner bottom be arranged to protect the bilges as much as possible and that it be extended to the sides of the vessel.

Shell longitudinals and frames in way of deep tanks are to have not less strength than is required for stiffeners on deep tank bulkheads.

(ii) Cargo Craft

Cargo craft that are on international voyages that are more than eight hours at operational speed from a port of refuge are to be fitted with double bottoms. The inner bottoms are to be fitted fore and aft between the peaks or as near thereto as practicable. Where, for special reasons in design, it may be desired to omit the double bottom, the arrangement are to be clearly indicated on the plans when first submitted for approval. A double bottom need not be fitted in way of deep tanks provided the safety of the ship in the event of bottom damage is not thereby impaired. It is recommended that the inner bottom be arranged to protect the bilges as much as possible and that it be extended to the sides of the craft. The scantlings of the double bottom are to be fitted in accordance with 2.2, 2.3 and 2.4 of this Chapter.

(g) Doors, Hatches, Scuttles, and Manhole Covers

All doors, hatches, scuttles, and manhole covers, together with their frames and coamings, are to be in accordance with the same requirements as the structure in which they are installed.

(h) Helicopter Deck

(i) General

Helicopter landing facilities, where provided, are to meet the following safety requirements. The attention of owners, builders and designers is directed to various international and governmental regulations and guides regarding the operational and other design requirements for helicopter landing on craft.

Plans showing the arrangement of the helicopter deck are to be submitted. The arrangement plan is to show the overall size of the helicopter deck and the designated landing area.

If the arrangement provides for the securing of a helicopter or helicopters to the deck, the predetermined position(s) selected to accommodate the secured helicopter, in addition to the locations of deck fittings for securing the helicopter, are to be shown. The type of helicopter to be considered is to be specified and calculations for appropriate loading conditions are to be submitted.

(ii) Safety Net

The unprotected perimeter of the helicopter landing deck is to be provided with safety netting or equivalent.

(iii) Material

In general, the construction of helicopter decks is to be of steel or other material with equivalent ability to retain structural capacity in a fire. If the helicopter deck forms the deckhead of a deckhouse or superstructure, it is to be insulated to A-60 class standard.

Aluminum alloys may be used for helicopter decks integral if they form part of an aluminum deckhouse or superstructure. They may also be of aluminum alloy, fitted above a steel deckhouse or deck structure, provided the following conditions are complied with:

(1) There are to be no openings in the exterior bulkheads directly below the helicopter deck.

(2) All windows in the lower exterior bulkheads are to be fitted with steel shutters.

(iv) Means of Escape and Access

The helicopter deck is to be provided with both a main and an emergency means of escape and access for fire fighting and rescue personnel. These means are to be located as far apart from each other as is practicable and preferably on opposite sides of the helicopter deck.

(i) Compensation

Compensation is to be provided for openings in the shell plating where required to maintain the longitudinal and transverse strength of the hull. All openings are to have well-founded corners. Those in the upper side shell are be located a suitable distance below the deck edge. Cargo and gangway openings are to be kept well clear of other discontinuities in the hull girder. Local provision is to be made to maintain the longitudinal and transverse strength of the hull.

Thick plating and doublers of sufficient breadth to prevent damage from the flukes of stockless anchors are to be fitted around the hawse pipes.

2.5.2 Structural Arrangements – Additional Requirements for Steel and Aluminum Alloys

(a) Shell Plating

The bottom plating is to extend to the chine or upper turn of bilge. In general, the side shell is to be of the same thickness from its lower limit to the gunwale. Increases in thickness and additional stiffening are required in way of skegs, shaft struts, hawse pipes etc. Where a bow thruster tube is fitted, the area in question is to be in accordance with the requirements in 2.3.1(d) of this Chapter.

2.5.3 Structural Arrangements – Additional Requirements for Fiber Reinforced Plastic Hull

(a) Tanks

In fiber reinforced plastic construction, non-integral tanks are to be used whenever possible. When integral tanks are used they are to be of single skin construction; the only exception is the tank top plating can be of sandwich construction. No stiffeners within integral tanks are to penetrate the tank boundaries. No gasoline tanks, or tanks containing petroleum products with flash points less than 61°C are to be fitted integrally. The design and arrangements of oil fuel tanks is to be such that there is no exposed horizontal surface at the bottom that could be exposed to a fire. Other fire protection arrangements for oil fuel tanks will be specially considered. For details of fire protection requirements see 4.1 of this Part.

All internal surfaces of FRP tanks are to be covered with chopped strand mat weighing at least 600 g/m^2. This covering is to be in addition to the scantlings required by the Rules. A suitable coating is to be applied to this covering to prevent the contents of the tank from impregnating the surrounding laminates. The sides, tops, and baffles of integral tanks are to have all connections taped on both sides. Fresh water tanks are to be coated with a non-toxic and non-tainting coat of resin that is recommended by the resin manufacturer for potable water tanks. Where outfit items are to be laminated to the tank surface, the heavy coating of resin is to be applied afterwards and the laminated brackets sealed to prevent the ingress of moisture. The scantlings of integral oil fuel and water tanks are to be in accordance with 2.3 and 2.4 of this Chapter. Integral tanks are to be tested in accordance with Table III 7-1 of this Chapter

2.6 Arrangement, Structural Details and Connections

2.6.1 Structural Details

(a) Aluminum and Steel

(i) General

Structural details are to be designed and constructed to minimize hard spots, notches and other structural discontinuities. Openings in webs, girders and other internal structural members are to be arranged clear of concentrated loads or areas of high stresses; slots in transverses and longitudinals for girders or beams

in such locations are to be fitted with collars. Care is to be taken to verify structural continuity; sharp corners and abrupt changes in section are to be avoided; toes of brackets and ends of members are not to terminate on plating without attachment to an adjacent member, unless specially approved.

(ii) Longitudinals

Deck, bottom and inner bottom longitudinals are in general to be continuous unless specially approved otherwise, but in way of bulkheads they may be intercostal provided continuity of strength and end fixity are maintained by the end brackets. The ends of all internal structural members are to provide end-fixity and load transmission to the supporting member. Departures from this may be considered where the alternative structure has equivalent strength. See 2.5.1 of this Chapter.

(iii) Girders and Transverses

Girders and transverses are to have depths not less than twice the depth of slots for beams and longitudinals or other openings. Transverses are to be arranged as continuous web rings, girders are to be aligned with stiffeners at bulkheads, alternative arrangements that provide fixity at the ends of transverses and girders will be specially considered.

(iv) Openings

Access and lightening holes with suitably radiused corners are to be arranged as necessary and clear of areas of load concentration or high stresses. Their depths and lengths are generally not to exceed respectively, 0.5 and 0.75 the depth of the members.

(v) Limber Holes

Drains or limber holes are to be provided in non-tight structure to prevent the accumulation of liquids. Vent pipes are to be arranged to prevent over pressuring of tanks. Holes are to be located to provide complete drainage of all non-tight voids, bays, or pockets formed by structure. The holes are not to be located at points of high stress, such as the intersection of members. Limber holes are to be half round at the edge, or round if not at the edge, of the structure that is to be drained. The diameter of drain or limber hole is not to be greater than 20% of the depth of the member.

(vi) Bi-metallic Connections

In aluminum construction, where bi-metallic connections are unavoidable, suitable insulation, such as gaskets, washers, sleeves, and bushings, are to be provided. The faying surfaces between mechanically fastened metal components, except machinery foundation shims, are to be protected by the use of a bedding compound. Stainless steel fasteners may be joined directly. See also Part II, 2.5.7.

(b) Fiber Reinforced Plastic

(i) General

Structural continuity is to be maintained and where changes in thickness or structural section occur, they are to be gradual to prevent notches, hard spots and other structural discontinuities. The requirements of 2.6.1(b)(iv) and 2.6.1(b)(v), below, and of 2.6.2 and 2.6.3 of this Chapter are for the basic laminate. Special consideration will be given where other laminates or resins are used. The ends of all internal structural members are to provide end-fixity and load transmission to the supporting member. Departures from this may be considered where the alternative structure has equivalent strength.

(ii) Changes in Laminate Thickness

A gradual taper is to be used for all changes in laminate thickness. Where the construction changes from sandwich laminate to a solid laminate, the thickness of the core material is in general, to be reduced by a gradual taper of not less than 2:1.

(iii) Openings, Holes and Raw Edges

Access and lightening holes with suitably radiused corners are to be arranged as necessary and clear of areas of load concentration or high stresses. Their depths and lengths are generally not to exceed, respectively, 0.5 and 0.75 times the depths of the members. Air and limber holes are to be in accordance with 2.6.1(a)(v) of this Chapter.

All exposed edges in way of cuts or holes in FRP single-skin laminates are to be sealed with resin. Edges of sandwich panels and edges of holes in sandwich panels are to be covered with one ply of glass cloth lapped no less than 25 mm onto each face of the laminate. The cloth is to be completely saturated with resin.

Ferrules installed in sandwich panels or stiffeners for drains or wire penetrations are to be set in bedding compound.

All hatch openings are to be supported by a system of transverse and longitudinal stiffeners.

(iv) Piping and Wiring in Foam

Piping or wiring passing through foam-filled spaces is to be installed in PVC tubing. The pipe is to be arranged such that water will not become trapped. The ends of the plastic tubing are to be joined to adjacent structure with resin impregnated mat. See Fig. III 2-20 of this Chapter.

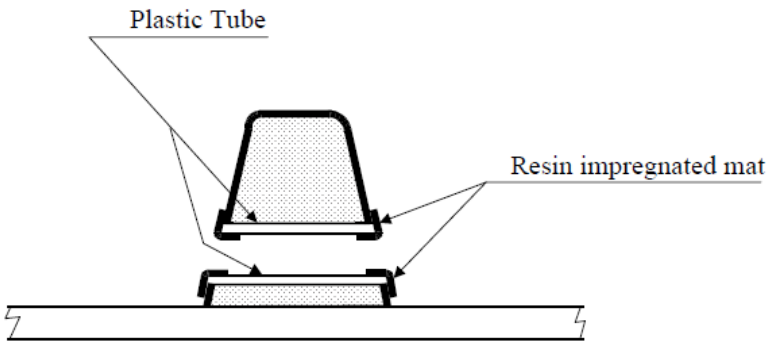

Fig. III 2-20
Piping or Opening through Foam Filled Space

(v) Stiffeners

(1) General

Stiffeners, frames, girders, deck beams, bulkhead stiffeners, etc. used to support FRP panels may be entirely of FRP, FRP laid over nonstructural cores or forms, or composites of FRP or other approved structural materials.

(2) Stiffeners without structural effective Cores or with Nonstructural Cores

Stiffeners without cores or with cores not indicated in 1.1.27(c)(viii) of this Chapter are to conform to Fig. III 2-21, and the thickness of the crown and web of the stiffeners is to be not less than obtained from the following equations:

$$t_1 = \frac{w}{20} \quad \text{mm}$$

$$t = \frac{h}{30} \quad \text{mm}$$

where:

t_1	=	thickness of stiffener crown	mm
t	=	thickness of stiffener webs	mm
w	=	width of stiffener crown	mm
h	=	height of stiffener webs	mm

Where the stiffeners are of laminates with properties differing from the basic laminate, the thickness is to be modified by the factor:

$$7.7\sqrt{C/E}$$

where:

E	=	compressive modulus of proposed laminate	kg/cm^2
C	=	ultimate compressive strength of proposed laminate	kg/cm^2

Where polyvinylchloride, balsa, or other approved core material is used, thicknesses less than given above may be accepted provided the buckling stresses of the stiffener skins comply with the buckling stress criteria in 2.3.3(d)(iv) of this Chapter.

Hat-section stiffeners constructed by laying FRP over premolded FRP forms (see Fig. III 2-22 of this Chapter) are to conform with Fig. III 2-21 of this Chapter and the above equations; the premolded forms may be considered structurally effective if their physical properties are at least equal to those of the overlay laminates.

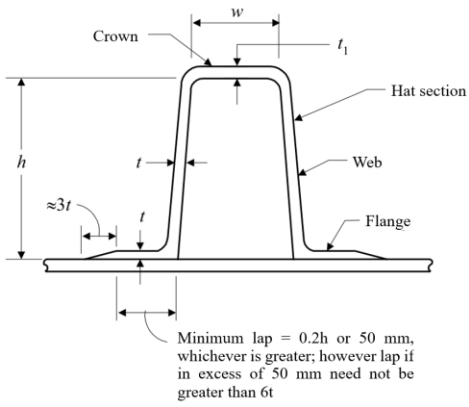

Fig. III 2-21
Proportions of Stiffeners

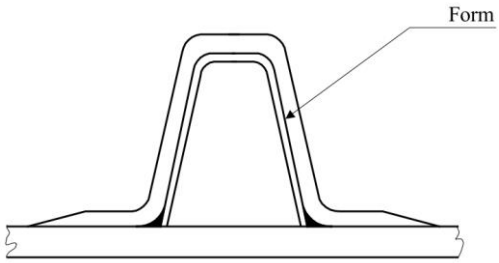

Fig. III 2-22
Premolded FRP Form

Premolded stiffeners bonded to the laminates with FRP angles, flanges or tapes (Fig. III 2-23 of this Chapter) are also to conform to Fig. III 2-21 of this Chapter and the above equations. The thickness of each bonding angle flange or tape is to be not less than the thickness of the webs of the stiffener, and the legs of the bonding angle, flange or tape are to be of equal length in accordance with 2.6.3 of this Chapter. Joints in premolded stiffeners are to be scarphed and spliced or otherwise reinforced to maintain the full strength of the stiffeners.
The thickness may be less than obtained from the above equation if these members are suitably stiffened and provided with adequate lateral stability. The required minimum flange or tape laps onto such members, as shown in Fig. III 2-21 of this Chapter, if greater than 50 mm, need not exceed 10t.

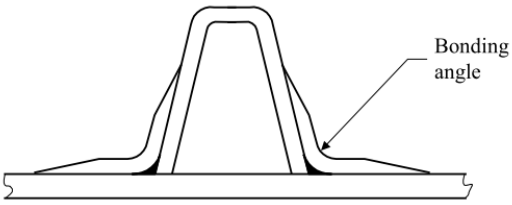

Fig. III 2-23
Premolded Stiffener

(vi) Girders and Longitudinal Frames

Girders and longitudinal frames are to be continuous through floors and web frames. Except in way of integral-tank end bulkheads, girders and longitudinal frames are also to be continuous through transverse bulkheads. Where such members are intercostal, attention is to be given to minimizing structural discontinuities. Where transverse structure is cut out in way of continuous members, the cut out is to be closed as to maintain the required tightness.

An acceptable type of continuous girder and longitudinal-frame FRP connection is shown in Fig. III 2-24 of this Chapter. The laps of the connections onto the supporting structure are to be not less than the overall widths of the structural members including flanges, and the thicknesses of the connections are to be not less than the thicknesses of the structural-member flanges or tapes.

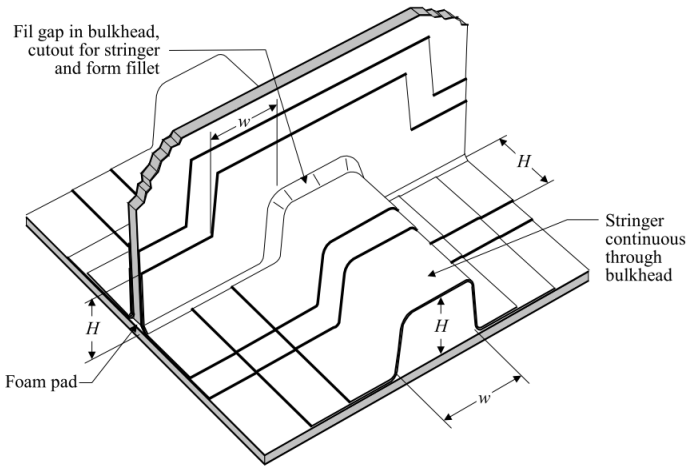

Fig. III 2-24
Connection of Longitudinals to Transverses

(vii) Engine Foundations

Engine bed fittings are to be of thicknesses and widths appropriate to the holding down bolts such that there is a close and accurate fit between the fittings and the engine girder.

Where the engine girders are a non-molded surface, the fittings are to be set in filled resin or mat. On a molded surface where the contours on the girders match the contours on the fitting, the fittings are to be set in a structural adhesive of a filled resin.

The fittings are to be bolted through the webs of the girders. A compression sleeve constructed of stainless steel or FRP is to be fitted in way of the through bolts. The area of the girder that is connected to the fitting is to have a high density insert in way of the faying surfaces. The insert is to extend 25 mm in all directions beyond the connection. If the size of the insert is less than 150 cm^2 a compound consisting of three parts phenolic or glass microballons, two parts resin, and one part milled glass fibers, by volume, may be used. A doubler consisting of one ply of mat and two plies of structural laminates are to be added to each face of the cored laminate. The doubler is to extend no less than 75 mm beyond the high density foam insert.

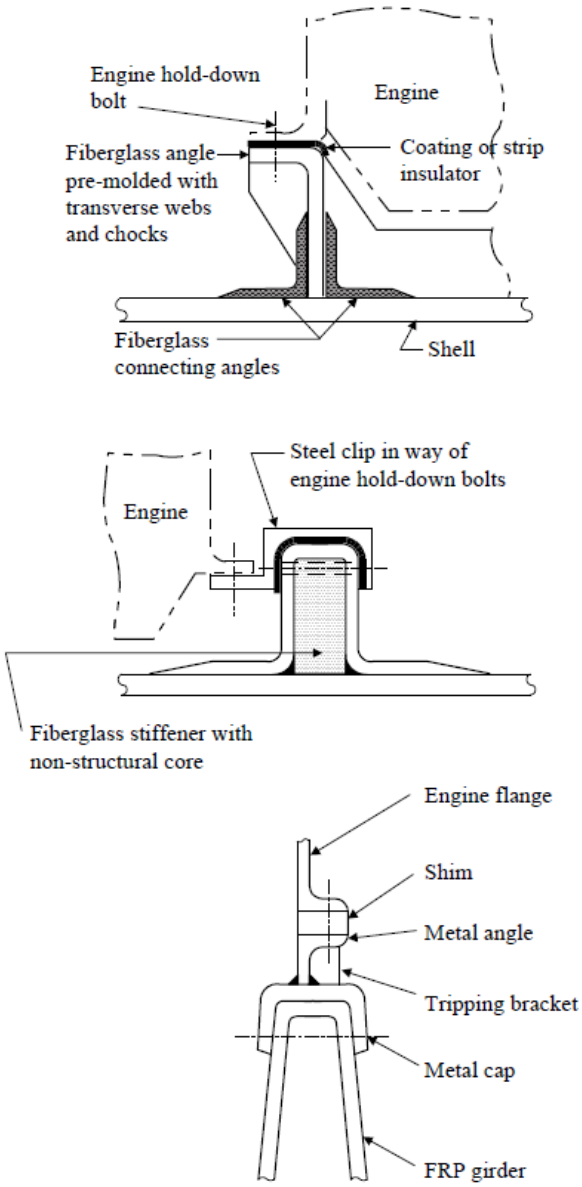

Fig. III 2-25
Engine Foundations

(viii) Deck Fittings

Deck fittings, such as cleats and chocks, are to be bedded in sealing compound, structural adhesive, or gasketed, through-bolted, and supported by either oversize washers or metal, plywood or wood backing plates, as shown in Fig. III 2-26 of this Chapter. Where washers are used, the laminate in way of the fittings is to be increased at least 25% in thickness. In no case is the fitting to impair the strength or tightness of the structure.

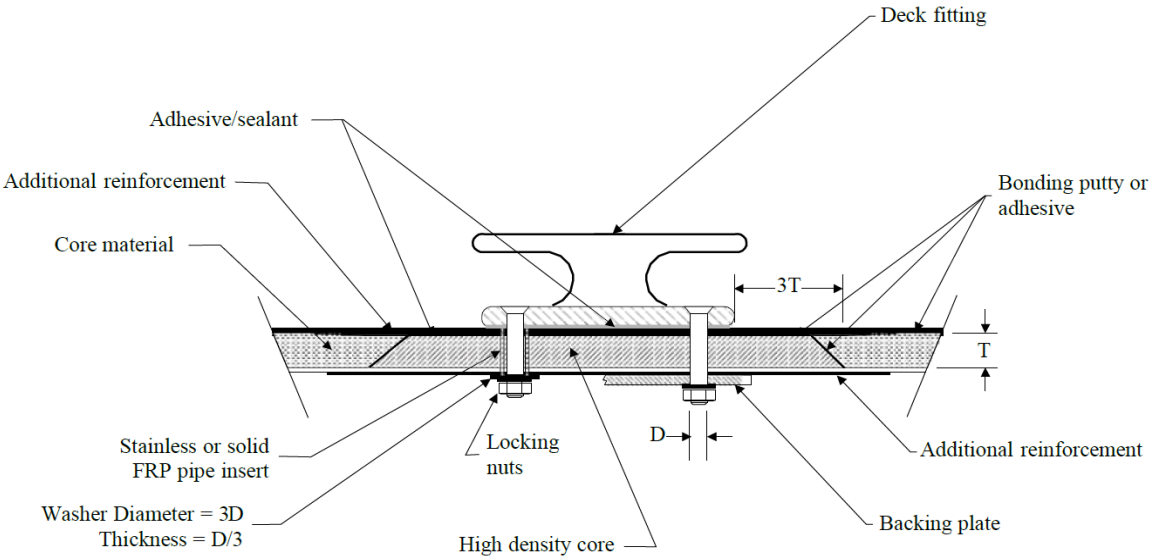

Fig. III 2-26
Deck Fittings

(ix) Through Hull Penetrations

Generally all through hull penetrations below the deepest draft design waterline are to be formed by solid FRP laminates, as shown in Fig. III 2-27 of this Chapter. When sandwich construction is used for the hull, the core material is to be completely sealed off from the through hull penetration, as shown in Fig. III 2-28 of this Chapter. All through hull penetrations are to be taped on both sides of the penetration. The penetration is to be set in a bedding compound.

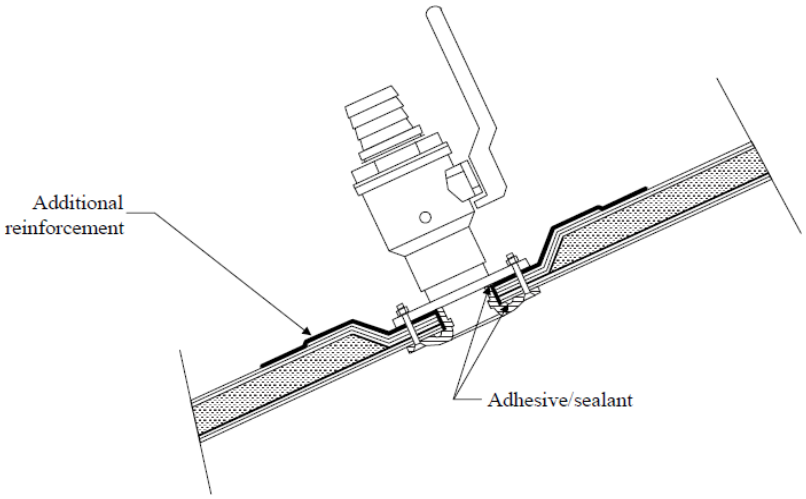

Fig. III 2-27
Through Hull Penetration – Solid Laminate

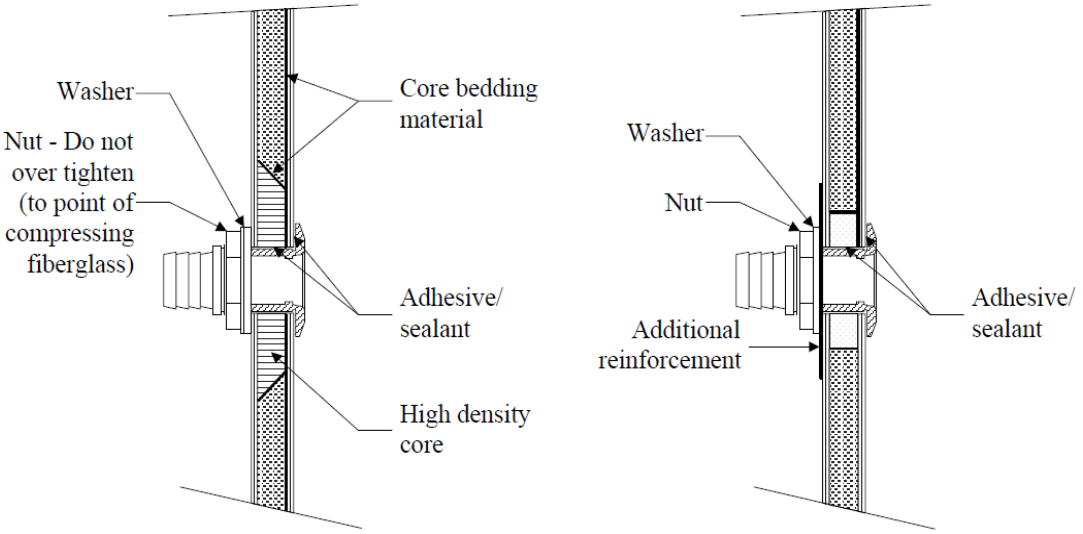

Fig. III 2-28
Through Hull Penetration – Sandwich Laminate

(x) Boundary Angles, Flanges or Tapes

(1) FRP to FRP
Secondary bonding of FRP components by means of double boundary angles, flanges or tapes is to be in accordance with Part II, Chapter 1. Typical boundary angles for FRP components are shown in Fig. III 2-29 of this Chapter. At the end connections of sandwich laminates, the core shear strength is to be effectively developed. The bulkheads are to be set into a foam insert, slow curing polyester putty, a microballon mixture or other approved material. The thickness of each boundary angle, flange or tape having similar strength to the members being connected is to be not less than the one obtained from the following:

(2) Single-skin to Single-skin
One-half the thickness of the thinner of the two laminates being joined.

(3) Sandwich to Sandwich
The greater of the mean thicknesses of the skins of the sandwich panels being attached.

(4) Sandwich to Single Skin
Either one-half the thickness of the single-skin laminate or the mean thickness of the skins of the sandwich panel being attached, whichever is less.
The thickness of each FRP-to-FRP boundary angle also is to be not less than obtained from the following equation:

$$t = 0.105L + 1.11 \qquad \text{mm}$$

where:
L = length, as defined in 1.1.2 of this Part, need not be taken as more than 46.6 m m
The width of each flange, not including end taper, is to be not less than 10 times the thickness given above, including the end taper, 13 times the thickness given above, and in general not less than 50 mm.

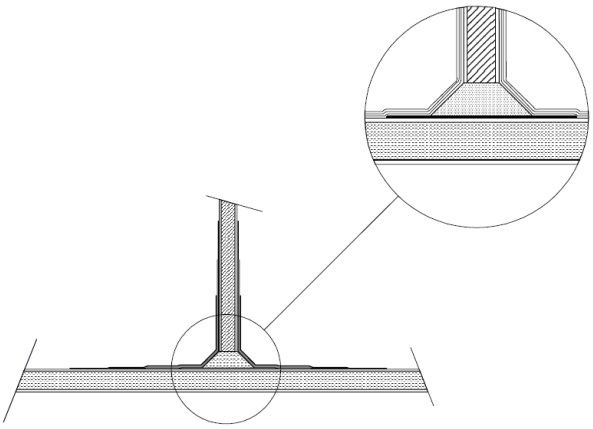

Fig. III 2-29
Boundary Angles for FRP Components

2.6.2 Welded and Mechanical Connections

(a) Steel and Aluminum

(i) General

Components may be fastened by either welding or rivets. For welding, see Part II, Chapter 2.

(ii) Expanding Rivets

Rivets of the expanding type (blind or "pop" rivets) may be used for lightly loaded connections where accessibility is unpracticable so as to prohibit the use of through fastenings. Such rivets are not to be used for joining components having a total thickness exceeding 12.5 mm, and are not to be used for joining decks to hulls except as temporary or unstressed fastenings installed for the sake of convenience or speed during assembly.

(iii) Conventional Rivets

Conventional rivets, where used, are to be subject to special consideration, and are to be of the cold-driven type. Washers, essentially of the same material as the rivets, are to be installed under both the heads and the points.

(b) Fiber Reinforced Plastic

(i) General

Components may be fastened with bolts, machine screws, or self-tapping screws. Where machine screws or self-tapping screws are used, they are not to have countersunk heads. Shanks of all threaded fastenings are to be long enough to pass through the joints, by at least one thread or plastic locking element. Excessive protrusion is to be avoided, and where the threaded end of the fastener is accessible, and the excess length can constitute a hazard, the excess length is to be removed. Washers are not to be used for the sole purpose of lessening thread protrusion. When it is necessary to reduce the length of thread protrusion, excess length is to be removed without damaging the threads and the bolts dressed to remove rough edges. Where watertight joints are required, suitable sealants or bedding compounds are to be used in addition to the fastenings. All threaded fasteners are to be stainless steel. Sizes and specifications are to be indicated on the submitted plans. The diameter of a fastening is not to be less than the thickness of the thinner component being fastened, with a minimum diameter of 8 mm. Where hardware is predrilled for fastener sizes that are less than specified above, the size of the fastener used is to match the size of the predrilled holes.

(ii) Bolts and Machine Screws

Bolts or machine screws are to be used where accessibility permits. The diameter of each fastener is to be at least equal to the thickness of the thinner component being fastened. Bolts and machine screws

less than 8 mm in diameter are not to be used. Where d is the fastener diameter, fastener centers are to be spaced at a minimum of 3d apart and are to be set in from edges of laminates a minimum of 3d.

Generally in fiber reinforced plastic construction, all bolted connections are to be made through solid fiber reinforced plastic inserts. Where this is not possible, all low density core material is to be replaced with a structurally effective insert. Diameters of fastening holes are not to exceed fastening diameters by more than 0.5 mm for bolts less than or equal to 18 mm in diameter and 1 mm for bolts greater than 18 mm in diameter. Elongated and oversize holes are permitted where necessary for adjustment or alignment.

Washers or backing plates are to be installed under all fastening heads and nuts that otherwise would bear on laminates. Washers are to measure not less than 2.25d in outside diameter and 0.1d in thickness. Nuts are to be either of the self-locking type, or other effective means to be provided to prevent backing off. Mechanical thread locking devices and methods such as lockwashers, either spring, tooth, or tab type, peening wiring, or thread upset after assembly are not to be used.

Bolted connections are, in general, to be bonded along all mating surfaces to insure the tightness of the structure using an accepted structural adhesive, and applied in accordance with the manufacturer's requirements.

In general, all structural, bolted connections are to use threads of bolts in accordance with the requirements in the following Table:

Location	Pitch(1)
Watertight connections below design waterline	10d
Connections in hull above design waterline to deck	15d
Hull to deck connections, bonded with approved structural adhesive	15d
Connections in deckhouses	20d
Deckhouse to deck connection, bonded with approved structural adhesive	15d
Minimum distance between reeled lines of bolts	3d

Notes:

(1) d is the diameter of the bolt.

(2) Internal boundary sealing angle is to be provided for all locations.

All structural, single line, bolted connections without adhesive bonding are to be in accordance with the requirements in the following Table:

Location	Pitch(1)
Manhole covers to fuel tanks	6d
Manhole covers to water tanks	8d
Covers to void tanks/cofferdams	10d
Bolted access hatches in decks	10d
Bolted watertight door frames	8d
Window frames	8d

Notes:

(1) d is the diameter of the bolt.

Bolt holes are to be drilled, without undue pressure at breakthrough, having a diametric tolerance of two percent of the bolt diameter. Where bolted connections are to be made watertight, the hole is to be sealed with resin and allowed to cure before the bolt is inserted. In areas of high stress or where unusual bolting configurations, on the basis of equivalence with the above requirements, are proposed, testing may be required.

(iii) Self-tapping Screws

In general, no self-tapping screws are to be used in fiber reinforced plastic construction. Self-tapping screws having straight shanks may be used for non-structural connections where accessibility is

unpracticable so as to prohibit the use of through fastenings. Where used, self-tapping screws are to have coarse threads.

(c) Backing Bars and Tapping Plates

The requirements for backing plates and bars will be individually considered, on the basis of the loading imposed, details of which are to be indicated on the submitted plans. Metal plates and bars are to be suitably protected against corrosion. Tapping plates may be encapsulated within the laminate, laminated to or bolted to the structure. Tapping plate edges or corners are to be suitably rounded.

2.6.3 FRP Deck-to-Hull Joints

(a) Weather Joints

The connection is to develop the strength of the deck and shell laminate, whichever is stronger, by either a bolted or bonded connection.

Where flanges are used, the hull flanges are to be equal in thickness and strength to the hull laminates and the deck flanges are to be equal in strength and thickness to the deck laminates. Where bolts are used to develop the required strength of the connection, the faying surfaces are to be set in bedding compound, polyester putty, or other approved material. Minimum widths of overlaps, minimum bolt diameters, and maximum bolt spacing are to be in accordance with Table III 2-17 of this Chapter. Intermediate values may be obtained by interpolation.

FRP bonding angles, where used, are to have flanges of the same strength and of at least one-half the thickness of single skin hull or deck laminate. On sandwich laminates, they are to have the same strength and thickness as the skin of a sandwich laminate, based on the thicker of the two laminates being connected. The widths of the flanges are to be in accordance with the widths of overlaps in Table III 2-17 of this Chapter.

Calculations supporting the geometry of the deck-to-hull joint are to be submitted for craft over 61 m in length.

Each joint is to be protected by a guard, molding, fender, or rail cap of metal, wood, rubber, plastic, or other approved material. The size and ruggedness of this protective strip are to be consistent with the severity of the service for which the craft is intended. The strip is to be installed in such a manner that it may be removed for repair or replacement without endangering the integrity of the deck-to-hull joint.

(b) Interior Joints

Interior decks are to be connected to the hull by shelves, stringers, or other structural members on both sides by FRP tapes. The connection is to effectively develop the strength of the interior deck. The fit-up between the parts are typically not to exceed 5 mm. The interior deck is to be bedded in syntactic foam or filled resin during assembly and prior to tabbing.

Table III 2-17
Deck-to-Hull Joints

Length of Craft L, m	Minimum Width of Overlap, mm	Minimum Bolt Diameter, mm	Bolt Spacing, mm
9	63.5	6.50	155
12	75.0	7.75	165
15	87.5	9.00	180
18	100.0	10.25	190
21	112.5	11.50	205
24	125.0	12.75	215
27	137.5	14.00	230
30	150.0	15.25	240
33	162.5	16.50	255
36	175.0	17.75	265
39	187.5	19.00	280
42	200.0	20.25	295
45	212.5	21.50	310
48	225.0	22.75	325
51	237.5	23.00	340
54	250.0	24.25	355
57	262.5	25.50	370
60	275.0	26.75	385

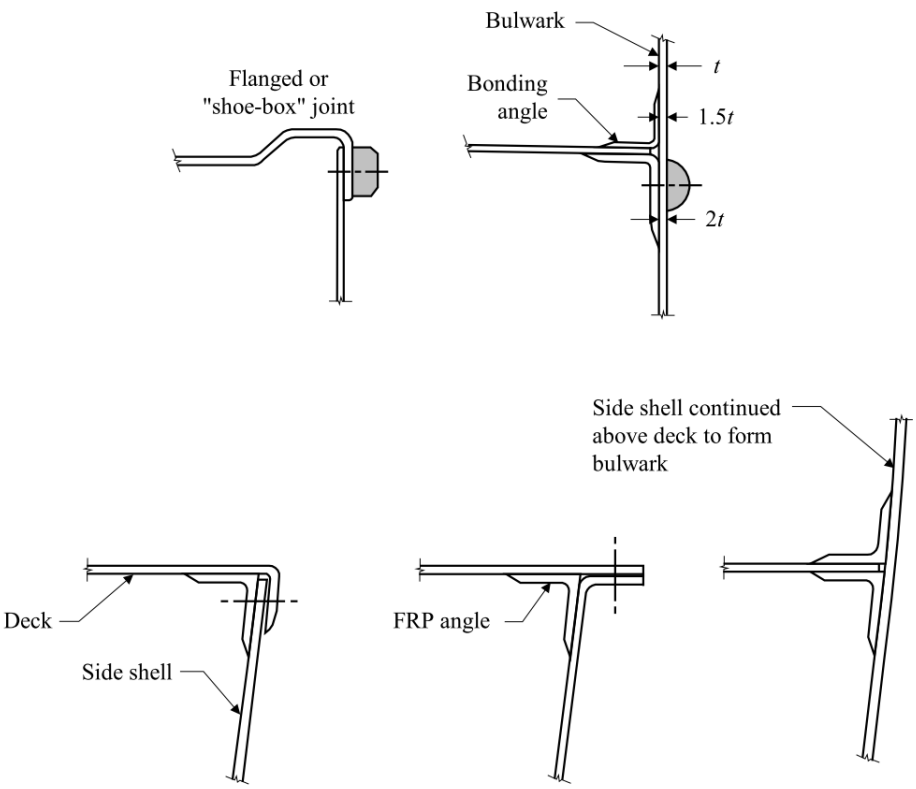

Fig. III 2-30
Examples of Deck-to-Hull Weather Joints

2.6.4 Shell Details

(a) Keels

Plate keels are to be not less than shown in Fig. III 2-31 and Fig. III 2-32, and vertical keels or skegs are to be not less than shown in Fig. III 2-33. Keels or skegs are to be adequate for docking loads, which are to be provided by the designer.

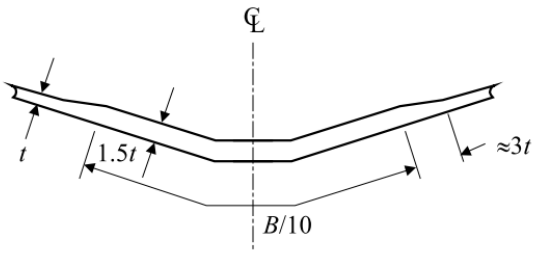

Fig. III 2-31
Plate Keel in One-piece Hull

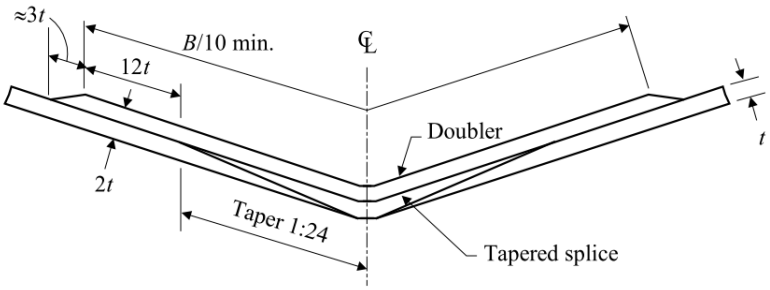

Fig. III 2-32
Plate Keel in Hull Molded in Halves

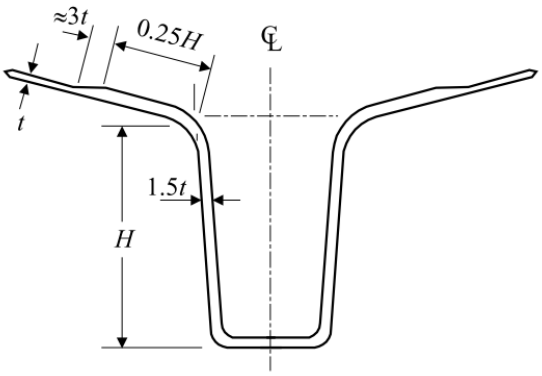

Fig. III 2-33
Vertical Keel or Skeg

(b) Chines and Transoms

Chines and transoms are to be not less than shown in Fig. III 2-34 through Fig. III 2-37.

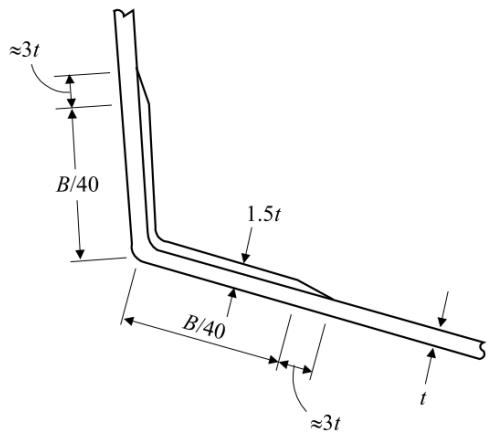

Fig. III 2-34
Chine or Transom – Single Skin Construction

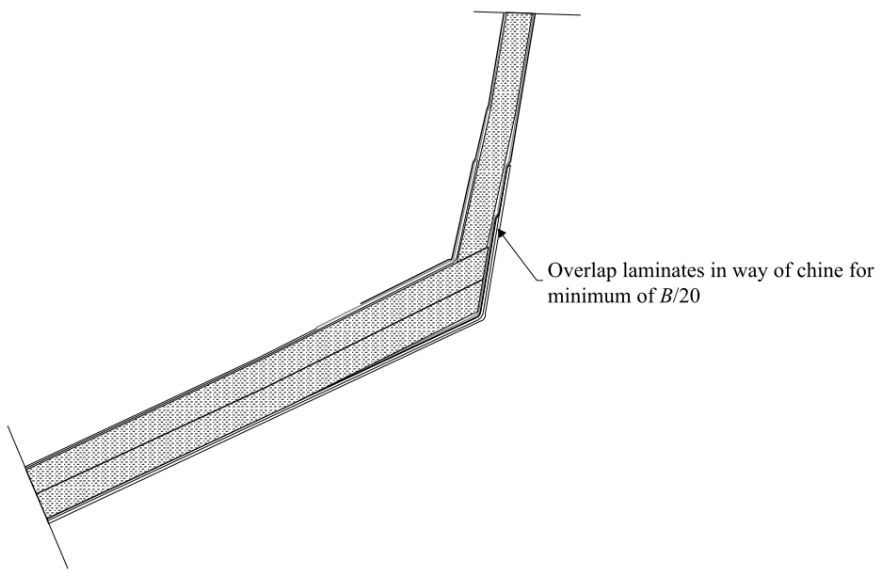

Fig. III 2-35
Chine or Transom – Sandwich Construction

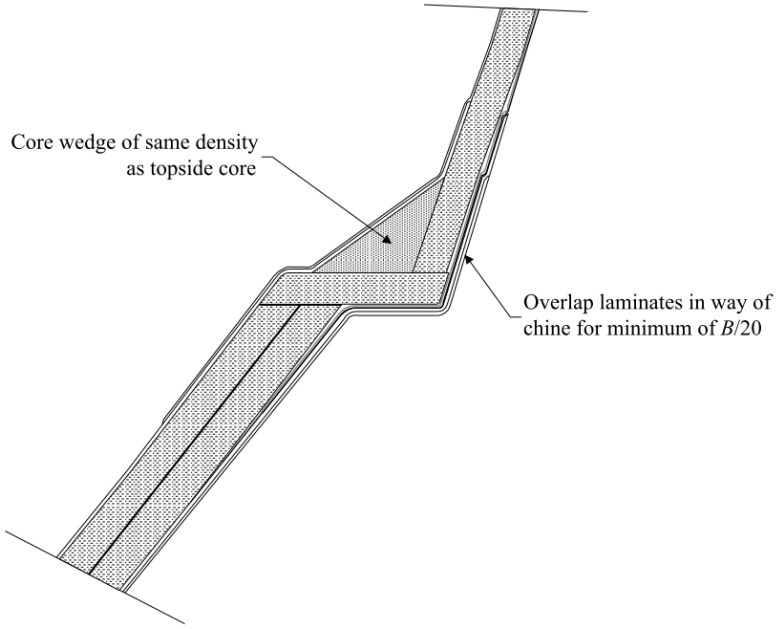

Fig. III 2-36
Stepped Chine – Foam Wedge Option

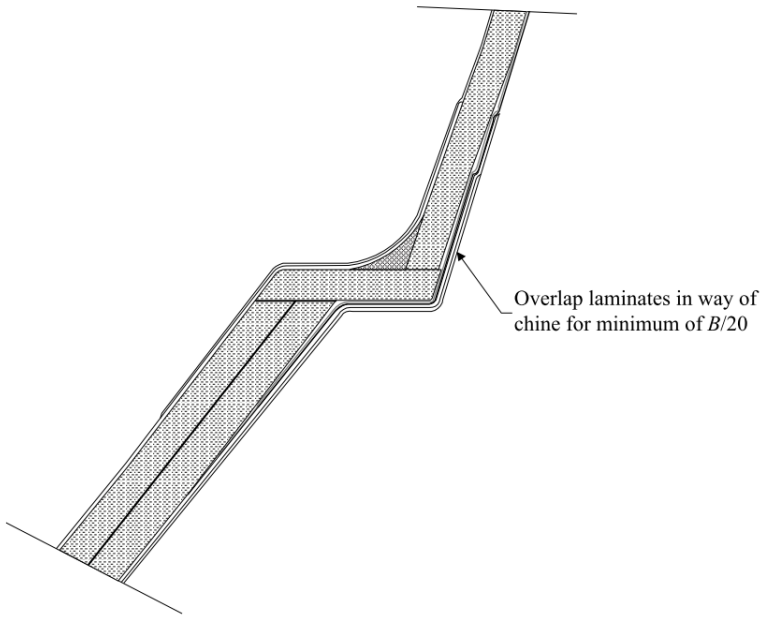

Fig. III 2-37
Stepped Chine – Putty Radius

2.7 Keels, Stems, Shaft Struts, and Propeller Nozzles

2.7.1 Materials

(a) Ordinary Strength Steels

The requirements in the following subsections are based upon ordinary strength steel. For higher strength steels and aluminum alloys, see 2.7.1(b) of this Chapter.

(b) High Strength Steels and Aluminum Alloys

Unless otherwise specified, the required section modulus and moment of inertia for high strength steels and aluminum alloys are as follows:

$$SM = SM_s Q$$

$$I = I_s E_s / E_o$$

where:

SM, I	=	required section modulus and inertia. Unless specifically stated otherwise, the properties about the minor axis (axis perpendicular to h or w) are to be used.	
SM_s, I_s	=	section modulus and inertia obtained from the dimensions given for ordinary strength steel.	
Q	=	as defined in 2.1.1(a)(i) of this Chapter	
E_s	=	2.06×10^5	N/mm^2
E_o	=	modulus of the material being considered	N/mm^2

Use of materials other than steel or aluminum will be specially considered.

(c) Fiber Reinforced Plastic

For fiber reinforced plastic hulls, keels and skegs are to have proportions as indicated in Fig. III 2-30 to 2-32 of this Chapter.

2.7.2 Keels

(a) Bar Keels

Where bar keels are fitted the thickness and depth is not to be less than that obtained from the following equations:

$$t = 0.625L + 12.5 \quad \text{mm}$$

$$h = 1.46L + 100 \quad \text{mm}$$

where:

t	=	thickness	mm
h	=	depth	mm
L	=	length of craft, as defined in 1.1.2 of this Part	m

Thicknesses and depths other than given above are acceptable provided the section moduli and moments of inertia about the transverse horizontal axis are not less than given above.

(b) Plate Keels

The thickness of the steel plate keel throughout the length of the craft is to be not less than the bottom shell required in 2.3 of this Chapter.

2.7.3 Stems

(a) Bar Stems

Where bar stems are fitted the thickness and width is not to be less than obtained from the following equations:

$$t = 0.625L + 6.35 \quad \text{mm}$$

$$w = 1.25L + 90 \quad \text{mm}$$

Where:

t	=	thickness	mm
w	=	width	mm
L	=	length of craft, as defined in 1.1.2 of this Part	m

This thickness and width is to be maintained between the keel and design load waterline. Above the designed load waterline they may be gradually reduced until the area at the head is 70% of that obtained from the equations.

Thicknesses and widths other than given above are acceptable provided the section moduli and moments of inertia about the longitudinal axis are not less than given above. The thickness of the bar stem in general should also not be less than twice the shell thickness.

(b) Plate Stems

Where plate stems are used, they are not to be less in thickness than the bottom shell plating required in 2.3.1 and 2.3.2 of this Chapter, where s is the frame spacing, or 610 mm (24 in.) if greater. Plate stems are to be suitably stiffened.

2.7.4 Stern Frames

Craft that are fitted with stern frames, shoe pieces, rudder horns, and rudder gudgeons are to meet the applicable requirements in Part II, Chapter 2 of the Rules for Steel Ships.

2.7.5 Shaft Struts

(a) General

Tail-shaft (propeller-shaft) struts where provided may be of the V or I type. The following equations are for solid struts having streamline cross-sectional shapes. For struts other than ordinary strength steel see above 2.7.1(b). For hollow section and non-streamlined struts, the equivalent cross sectional area, moment of inertia, and section modulus (major axis) are to be maintained. For a streamlined cross-section strut, the moment of inertia about the longitudinal axis is $wt^3/25$ and the section modulus about the same axis is $wt^2/12.5$. Generally each leg of a "V" strut are to have similar cross section. Alternative methods for the determination of "V" strut requirements can be found in Appendix 3 of this Part.

(b) V Strut

(i) Width

The width of each strut arm is not to be less than obtained from the following equation:

$$w = 2.27D$$

where:

w	=	width of strut (major axis)	mm

D = required diameter of ASTM A668, Class B tail shaft (see Part IV, 2.6) mm

(ii) Thickness

The thickness of the strut is not to be less than obtained from the following equation:

$$t = 0.365D$$

where:

t = thickness of strut (minor axis) mm
D = required diameter of ASTM A668, Class B tail shaft mm

Where the included angle is less than 45 degrees, the foregoing scantlings are to be specially considered.

(c) I Strut

(i) Width

The width of the strut arm is not to be less than obtained from the following equation:

$$w_1 = 3.22D$$

where

w_1 = width of strut (major axis) mm
D = diameter of tail shaft mm

(ii) Thickness

The thickness of the strut is not to be less than obtained from the following equation:

$$t_1 = 0.515D$$

where:

t = thickness of strut (minor axis) mm
D = diameter of tail shaft mm

(d) Strut Length

The length of the longer leg of a V strut or the leg of an I strut, measured from the outside perimeter of the strut barrel or boss to the outside of the shell plating, is not to exceed 10.6 times the diameter of the tail shaft. Where this length is exceeded, the width and thickness of the strut are to be increased, and the strut design will be given special consideration. Where strut length is less than 10.6 times required tailshaft diameter, the section modulus of the strut may be reduced in proportion to the reduced length, provided the section modulus is not less than 0.85 times Rule required section modulus.

(e) Strut Barrel

The thickness of the strut barrel or boss is to be at least one-fifth the diameter of the tail shaft. The length of the strut barrel or boss is to be adequate to accommodate the required length of propeller-end bearings. Strut barrels constructed of aluminum are not subject to the corrections required by 2.7.1(b) of this Chapter.

2.7.6 Skegs and Other Hull Appendages

Craft fitted with skegs and other permanent hull appendages are to comply with the following:

(a) The anticipated operational loadings under all craft operations (docking loads, hydrodynamic forces, and etc., as applicable) are to be submitted for CR review.

(b) All skegs and other permanent hull appendages are to be attached to the shell plate by means of double continuous fillet welds in accordance with 2.5.3 of Part II using a weld factor C = 0.5 DC. Appendage structure is to be aligned or reinforced with internal hull structural members.

(c) Thickness of shell plating in way of an appendage is to be increased in accordance with 2.3.1(a) of this Chapter.

(d) Where a closing plate prohibits the inspection of a void space or joint that is integral to the shell plating, access ports and drain plugs are to be provided in way of this space.

(e) In the case of large continuous skegs or other similar hull appendages, direct analysis may be requested by CR in order to validate stress interaction effects with the hull girder.

(f) Where the appendages designed to shear off in the event of impact, calculations for the appendage are to be submitted and subject to special consideration.

2.7.7 Propeller Nozzles

(a) Application

The requirements in this subsection are applicable for propeller nozzles with inner diameter d of 5 meters or less. Nozzles of larger inner diameter are subject to special consideration with all supporting documents and calculations submitted for review.

(b) Design Pressure

The design pressure of the nozzle is to be obtained from the following:

$$p_d = 10^{-6} \cdot c \cdot \varepsilon \cdot \left(\frac{N}{A_P}\right) \qquad \text{N/mm}^2$$

where:

c	=	coefficient as indicated in Table III 2-18 of this Chapter	
ε	=	coefficient as indicated in Table III 2-19 of this Chapter, but not to be taken less than 10	
N	=	maximum shaft power	kW
A_P	=	propeller disc area	
	=	$D^2 \frac{\pi}{4}$	m^2
D	=	propeller diameter	m

Table III 2-18
Coefficient c

Propeller Zone (see Fig. III 2-38 of this Chapter)	c
	p_d in N/mm^2
2	10.0
1 & 3	5.0
4	3.5

Table III 2-19
Coefficient ε

	p_d in N/mm^2
ε	$21 - 2 \times 10^{-2}\left(\frac{N}{A_p}\right)$

(c) Nozzle Cylinder

(i) Shell Plate Thickness

The thickness of the nozzle shell plating, in mm, is not to be less than:

$t = t_o + t_c$, but not to be taken less than 7.5 mm

where:

t_o	=	thickness obtained from the following formula: $0.158 \cdot S_P \cdot \sqrt{p_d} K_n$	mm
S_P	=	spacing of ring webs	mm
P_d	=	nozzle design pressure	N/mm^2
t_c	=	corrosion allowance determined by Table III 2-20 of this Chapter	
K_n	=	nozzle material factor as defined in 2.8.1(b) of this Chapter	

Table III 2-20
Corrosion Allowance t_c

Value of t_o	t_c mm
If $t_o \leq 10.0$	1.5
If $t_o > 10.0$	the lesser of b_1, b_2
where $b_1 = 3.0$ mm $b_2 = \left(\frac{t_o}{\sqrt{1/K_n}} + 5\right) \times 10^{-1}$ mm	

(ii) Internal Diaphragm Thickness

Thickness of nozzle internal ring web is not to be less than the required nozzle shell plating for Zone 3.

(d) Nozzle Section Modulus

The minimum requirement for nozzle section modulus is obtained from the following formula:

$SM = d^2 b V_d^2 Q n$ cm^3

where

d	=	nozzle inner diameter	m
b	=	nozzle length	m
V_d	=	design speed in ahead condition, as defined in 2.8.2(a) of this Chapter	knots
Q	=	reduction factor conditional on material type	
	=	1.0 for ordinary strength steel	
	=	0.78 for H32 strength steel	
	=	0.72 for H36 strength steel	
	=	0.68 for H40 strength steel	
		Q factor for steel having yield strength other than above is to be specially considered	
n	=	nozzle type coefficient taken equal to 0.7 for fixed nozzles	

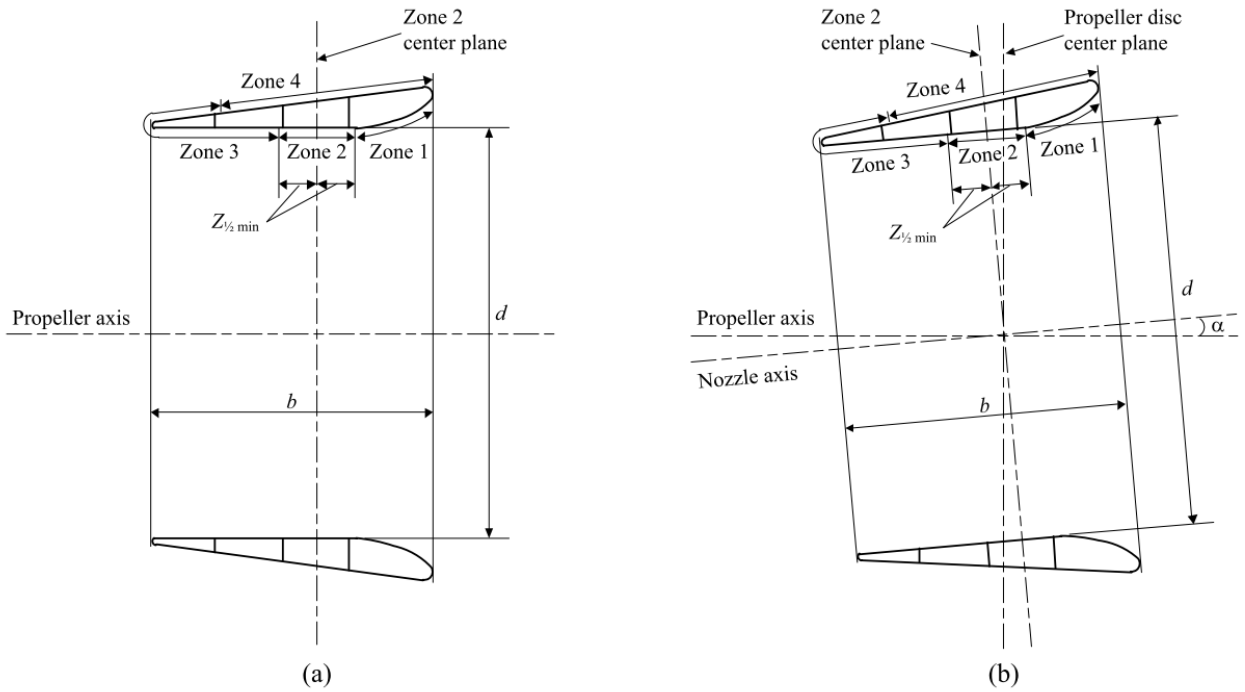

Fig. III 2-38
Propeller Nozzle Section View

b	=	nozzle length
d	=	nozzle inner diameter
Zone 1		zone of nozzle inner skin from nozzle leading edge to the fore end of Zone 2
Zone 2		zone of nozzle inner skin in way of propeller tips with two ring webs within the zone
$z_{1/2min}$	=	The minimum length on each side of Zone 2 center plane is to be:
	=	$\frac{b}{8}$ where Zone 2 center plane and propeller disc center plane coincide as shown in Fig. III 2-38(a) of this Chapter;
	=	$\frac{b}{8}cos\alpha + \frac{d}{2}tan\alpha$ where α is the tilt angle between the Zone 2 and propeller disc center planes, as shown in Fig. III 2-38(b) of this Chapter;
Zone 3		zone of nozzle inner and outer skin covering the tail vicinity, from aft end of Zones 2 to the aft end of Zone 4
Zone 2		zone of nozzle outer skin from the leading edge to the fore end of Zone 3

(e) Welding Requirement

The inner and outer nozzle shell plating is to be welded to the internal stiffening ring webs with double continuous welds as far as practicable. Plug/slot welding is prohibited for the inner shell, but may be accepted for the outer shell plating, provided that the nozzle ring web spacing is not greater than 350 mm.

2.7.8 Propulsion Improvement Devices (PID) as Hull Appendages

(a) Application Scope

The requirements in this Subsection are applicable for Propulsion Improvement Devices (PID) hull appendages including wake equalizing and flow separation alleviating devices (such as spoilers, wake equalizer, stern tunnels, pre-swirl fins, stators, and pre-swirl ducts) and post swirl devices (such as rudder thrust fins, post swirl stators, and rudder bulbs) that are permanently affixed to the hull structure.

(b) Plans and Documentation

The following plans, details and calculations are to be submitted for approval:

(i) Drawings and plans covering the detailed design of the structural components, including the end connections and attachment to the hull structure;

(ii) Information on material properties and welding details, such as scantlings of the welded connection and welding detail and size;

(iii) Calculations to validate the design of the PID and the supporting foundations interior to the craft. The calculations are to consider strength, fatigue and vibration in both the ahead and astern conditions.

(c) Design and Arrangement

The following requirements are to be complied with for the propulsion improvement devices as outlined in 2.7.8(a) of this Chapter. Devices of novel concept are to be specially considered with all the related drawings and documents submitted:

(i) The structural materials are to be compatible with the mechanical and chemical properties of the hull strake to which it is attached. Examples of such design considerations are to have adequate structural strength for load bearing/transferring and acceptable galvanic potential between materials to reduce the risk of galvanic corrosion.

(ii) PID end connections are to have a suitable transition for the particular application and to be effectively terminated in way of internal stiffening members.

(d) Structural End Connection

Welded end connections of device structural component to the hull are to be designed and constructed in accordance with the following:

(i) Welding at the connection is to be full penetration and is to be in accordance with Part XII of the Rules for Steel Ships and Part II, Chapter 2 of the Rules, as applicable.

(ii) Nondestructive volumetric and surface examinations are to be performed on the welds of the connection plates and the shell penetration. 100% Magnetic Testing (MT) and at least 10% Ultrasonic Testing (UT) is to be carried out on the welds of the connection plates and the shell penetration.

2.8 Rudders and Steering Equipment

2.8.1 General

(a) Application

Requirements specified in this Section are applicable to:

(i) Ordinary profile rudders described in Table III 2-21 of this Chapter with rudder operating angle range from –35° to +35°.

(ii) High-lift rudders described in Table III 2-22 of this Chapter, the rudder operating angle of which might be exceeding 35° on each side at maximum design speed.

(iii) Other steering equipment other than rudders identified in this Section.

Rudders not covered in Table III 2-21 nor Table III 2-22 of this Chapter are subject to special consideration, provided that all the required calculations are prepared and submitted for review in full compliance with the requirements in this Section. Where direct analyses adopted to justify an alternative design are to take into consideration all relevant modes of failure, on a case by case basis. These failure modes may include, amongst others: yielding, fatigue, buckling and fracture. Possible damages caused by cavitation are also to be considered. Validation by laboratory tests or full scale tests may be required for alternative design approaches.

Special consideration will be given to aluminum rudder stocks and fiber reinforced plastic rudders and rudder stocks. Material specifications are to be listed on the plans.

(b) Materials for Rudder, Rudder Stock and Steering Equipment

Rudder stocks, pintles, coupling bolts, keys and other steering equipment components described in this Section are to be made from material in accordance with the requirements of Part XI of the Rules for Steel Ships and Table III 1-2 of this Part, and particularly:

(i) The Surveyor need not witness material tests for coupling bolts and keys.

(ii) The surfaces of rudder stocks in way of exposed bearings are to be of noncorrosive material.

(iii) Material properties of dissimilar parts and components in direct contact with each other are to be submitted for review of compatibilities, such as galvanic potential.

(iv) Material factors of castings and forgings used for the shoe piece (K_g), horn (K_h), stock (K_s), bolts (K_b), coupling flange (K_f), pintles (K_p), and nozzles (K_n) are to be obtained for their respective material from the following equation:

$$K = (235/\sigma_F)^e$$

where

σ_F	=	yield strength of material used, but is not to be taken as greater than $0.7\sigma_T$ or 450, whichever is smaller	N/mm^2
σ_T	=	tensile strength of material used	N/mm^2
e	=	0.75 for $\sigma_F > 235$	N/mm^2
e	=	1.0 for $\sigma_F \leq 235$	N/mm^2

For craft intended to operate in the various seastates exceeding the design significant wave heights , σ_F may be specially considered.

(c) Expected Torque

The torque considered necessary to operate the rudder in accordance with Part IV, 2.4.4(c) is to be indicated on the submitted rudder or steering gear plan. See Part IV, 2.4.2 and 2.8.3(d) of this Chapter.

Note that this expected torque is not the design torque for rudder scantlings.

(d) Rudder Stops

Strong and effective structural rudder stops are to be fitted. Where adequate positive mechanical stops are provided within the steering gear in accordance with Part IV, 2.4.5(a), structural stops will not be required.

2.8.2 Rudder Design Force

Rudder force, C_R, upon which rudder scantlings are to be based, is to be obtained from equation described either in 2.8.2(a) or 2.8.2(b) of this Chapter as applicable. Where for the ordinary rudders the rudder angle, ϕ, exceeds 35°, the rudder force, C_R, is to be increased by a factor of 1.74 sin (ϕ).

(a) Rudder Blades without Cutouts

Where the rudder profile can be defined by a single quadrilateral, the rudder force is to be obtained from the following equation.

$$C_R = 0.132 k_R k_c k_l A V_R^2 \quad \text{kN}$$

where

k_R	=	$(b^2/A_t + 2)/3$ but not taken more than 1.33	
b	=	mean height of rudder area, as determined from Table III 2-21 of this Chapter	m
A_t	=	sum of rudder blade area, A, and the area of rudder post or rudder horn within the extension of rudder profile	m^2
A	=	total projected area of rudder as illustrated in Table III 2-21 of this Chapter For steering nozzles, A is not to be taken less than 1.35 times the projected area of the nozzle.	m^2

k_c = coefficient depending on rudder cross section (profile type) as indicated in Table III 2-21 and 2-23 of this Chapter. For profile types differing from those in Table III 2-21 and 2-23 of this Chapter, k_c is subject to special consideration.

k_l = coefficient as specified in Table III 2-23 of this Chapter

V_R = craft speed knots

= for ahead condition V_R equals V_d or V_{min}, whichever is greater

= for astern condition V_R equals V_a or $0.5V_d$, or $0.5V_{min}$, whichever is greater

V_d = design speed with the craft running ahead at the maximum continuous rated shaft rpm and at the summer load waterline knots

V_a = maximum astern speed knots

V_{min} = $(V_d+20)/3$

Where there are any appendages such as rudder bulb fitted on the rudder, its effective areas are to be included in the area of the rudder blade if significant.

(b) Rudder Blades with Cutouts

This paragraph applies to rudders with cutouts (semi-spade rudders), such that the whole blade area cannot be adequately defined by a single quadrilateral. See Fig. III 2-40 of this Chapter. Equations derived in this paragraph are based on a cutout blade with two quadrilaterals. Where more quadrilaterals are needed to define the rudder shape, similar rules apply.

The total rudder force described in 2.8.2(a) of this Chapter is applicable for rudders with cutout(s), with A being the summation of sub-quadrilaterals that make up the whole area of the rudder blade. Rudder force distribution over each quadrilateral is to be obtained from the following equations:

$$C_{R1} = C_R A_1 / A \quad \text{kN}$$

$$C_{R2} = C_R A_2 / A \quad \text{kN}$$

where

C_R and A are as defined in 2.8.2(a) of this Chapter

A_1 and A_2 are as described in Fig. III 2-40 of this Chapter

(c) Rudders Blades with Twisted Leading-Edge

This kind of rudder has the leading edge twisted horizontally on the top and bottom of the section that is an extension of the center of the propeller shaft. For the purpose of calculating design force, twisted rudders may be distinguished in four categories:

Category	Description
1	The projected leading edge of twisted upper and lower blades not lineup to each other
2	The projected leading edge of twisted upper and lower blades form a straight line
3	Rudder with twisted leading edge combined with tail edge flap or fins
4	The twisted leading edge has a smooth continuous wavy contour (no deflector) or the rudder has multiple section profile types

Design force for rudder with twisted leading edge is obtained according to the following criteria:

(i) For Category 1 rudders as indicated in the above table, design force over upper and lower rudder blades are obtained from the following equations respectively:

$C_{R1} = 0.132 k_R k_c k_l A_1 V_R^2$ kN for twisted upper rudder blade;

$C_{R2} = 0.132 k_R k_c k_l A_2 V_R^2$ kN for twisted lower rudder blade;

$C_R = C_{R1} + C_{R2}$ kN overall design force;

(ii) For Categories 2, 3, and 4, rudder design force indicated in 2.8.2(a) of this Chapter is applicable, that is:

$C_R = 0.132 k_R k_c k_l A V_R^2$ kN

where

k_R, k_c, k_l, A, and V_R are as defined in 2.8.2(a) of this Chapter, (for rudder has multiple section profile types, A is the whole projected areas).

A_1 and A_2 are the projected areas of upper and lower blades separated at the deflector cross section, respectively. Where the effective projected area of rudder bulb (if present) forward of rudder leading edge is significant and needs to be counted, the proportioned bulb effective areas are added to A_1 and A_2 accordingly.

Values of k_c for ahead and astern conditions are determined from one of the methods below as applicable, if the type of basic rudder profile is not provided:

(1) k_c is taken from Table III 2-21 of this Chapter for twisted rudders of Categories 1 & 2;

(2) k_c is taken from Table III 2-22 of this Chapter for twisted rudders of Category 3;

(3) k_c is subjected to special considerations for twisted rudders of Category 4;

(4) Shipyard/rudder manufacturers' submitted k_c obtained from testing data or calculations may be accepted subject to the Society's review of all the supporting documents;

Table III 2-21
Coefficient k_c for Ordinary Rudders

Profile type	k_c	
	Ahead condition	Astern condition
Single plate	1.0	1.0
NACA-00 Göttingen profile 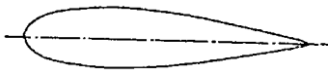	1.1	0.80
Hollow profile 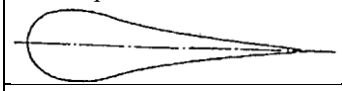	1.35	0.90
Flat side profile 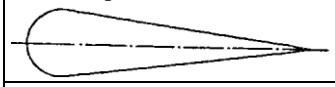	1.1	0.90
Mixed (e.g., HSVA) 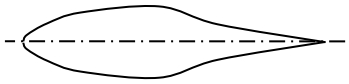	1.21	0.90
Twisted rudder of Cat.1&2 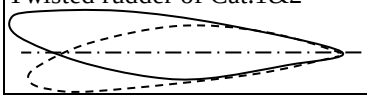	1.21 (if not provided)	0.90 (if not provided)

Table III 2-22
Factor of k_c for High-Lift/Performance Rudders

Profile type	k_c	
	Ahead condition	Astern condition
Fish tail (e.g., Schilling high-lift rudder) 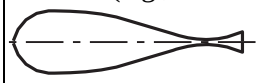	1.4	0.8
Flap rudder (or Twisted rudder of Cat. 3)	1.7	1.3
Rudder with steering nozzle 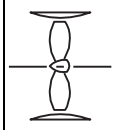	1.9	1.5

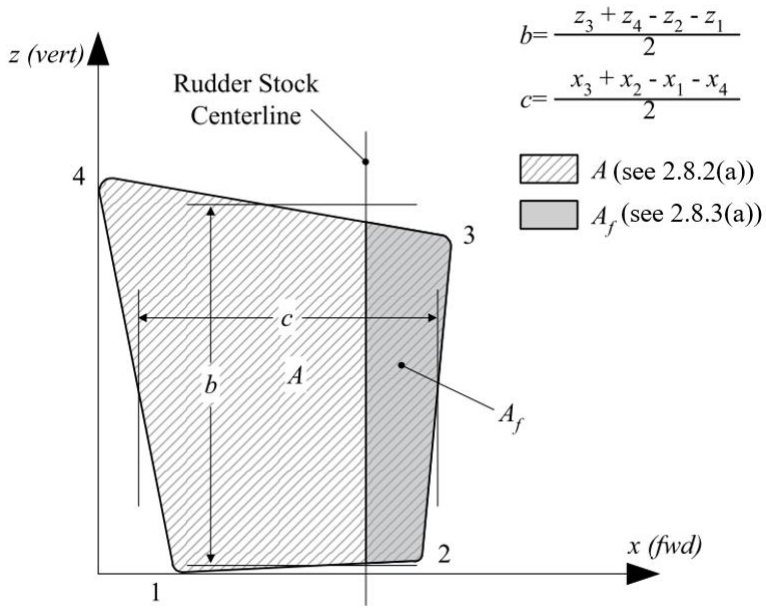

Fig. III 2-39
Rudder Blade without Cutout

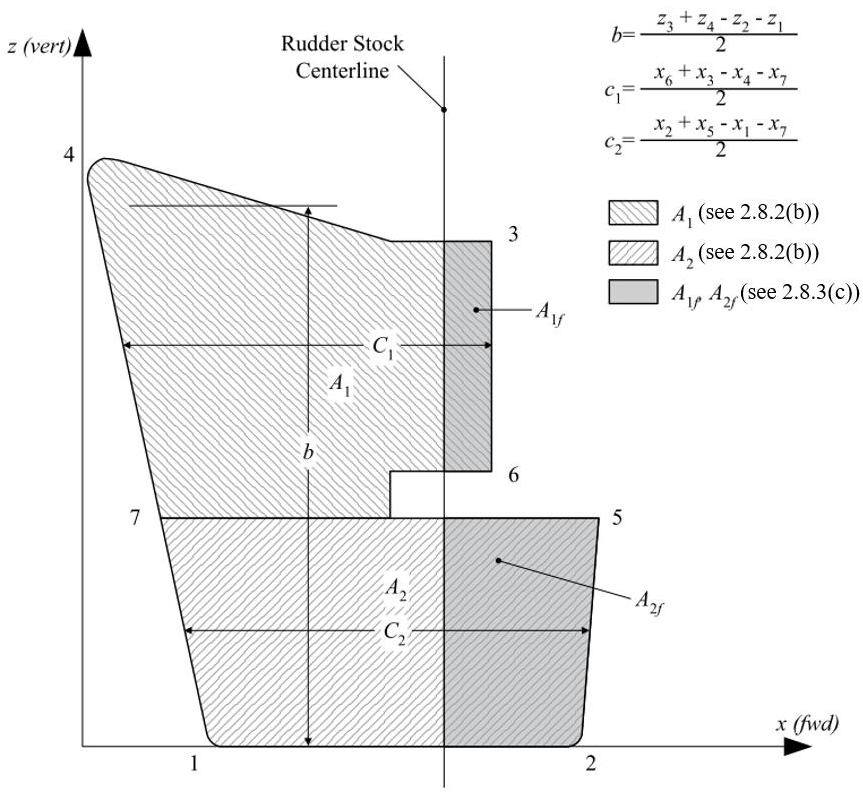

Fig. III 2-40
Rudder Blade without Cutout

2.8.3 Rudder Design Torque

(a) General

The rudder design torque, Q_R, for rudder scantling calculations is to be in accordance with 2.8.3(b) or 2.8.3(c) of this Chapter as applicable.

(b) Rudder Blades without Cutouts

Rudder torque, Q_R, is to be determined from the following equation for both ahead and astern conditions.

$$Q_R = C_R r \qquad \text{kN-m}$$

where

C_R	=	rudder force as calculated in 2.8.2(a) of this Chapter	kN
r	=	c(α− k) (but not less than 0.1c for ahead condition)	m
c	=	mean breadth of rudder area, as shown in Fig. III 2-39 of this Chapter	m
α	=	coefficient as indicated in Table III 2-24 of this Chapter	
k	=	A_f/A	
A_f	=	area of rudder blade situated forward of the centerline of the rudder stock, as shown in Fig. III 2-39 of this Chapter	m^2
A	=	whole rudder area as described in 2.8.2(a) of this Chapter	m^2

Where there are any appendages such as rudder bulb fitted on the rudder, effective areas are to be included in the area of the rudder blade if significant.

Table III 2-23
Coefficient k_l

Rudder/Propeller Layout	k_l
Rudders outside propeller jet	0.8
Rudders behind a fixed propeller nozzle	1.15
All others	1.0

Table III 2-24
Coefficient α

Rudder Position or High-lift	α		
	Ahead Condition	Astern Condition	
Located behind a fixed structure, such as a rudder horn	0.25	0.55	
Located where no fixed structure forward of it	0.33	0.75 (hollow profile)	0.66 (non-hollow)
High-Lift Rudders (see Table III 2-22 of this Chapter)	Special consideration (0.40 if unknown)	Special consideration	

(c) Rudders Blades with Cutouts

This paragraph refers to rudder blades with cutouts (semi-spade rudders) as defined in 2.8.2(b) of this Chapter. Equations derived in this paragraph are based on a cutout blade with two quadrilaterals. Where more quadrilaterals are needed to define the rudder shape, similar rules apply.

Rudder torque, Q_R, in ahead and astern conditions is to be obtained from the following equation:

$$Q_R = C_{R1} r_1 + C_{R2} r_2 \qquad \text{kN-m}$$

but not to be taken less than Q_{Rmin} in the ahead condition

where

Q_{Rmin}	=	$0.1C_R(A_1c_1+A_2c_2)/A$	
r_1	=	$c_1(\alpha - k_1)$	m
r_2	=	$c_2(\alpha - k_2)$	m
c_1,c_2	=	mean breadth of partial area A_1, A_2 from Fig. III 2-40 of this Chapter	m
α	=	coefficient as indicated in Table III 2-24 of this Chapter	
k_1,k_2	=	A_{1f}/A_1, A_{2f}/A_2 where A_{1f}, A_{2f} = area of rudder blade situated forward of the centerline of the rudder stock for each part of the rudder, as shown in Fig. III 2-40 of this Chapter	

C_R, C_{R1}, C_{R2}, A_1, A_2 are as defined in 2.8.2(b) of this Chapter

(d) Rudders with Twisted Leading Edge

In general, rudder torque, Q_R, indicated in 2.8.3(b) of this Chapter is applicable for rudders with twisted leading edge, where C_R is obtained from 2.8.2(c) of this Chapter.

(e) Trial Conditions

The above equations for Q_R are intended for the design of rudders and should not be directly compared with the torques expected during the trial (see 2.8.1(c) of this Chapter) or the rated torque of steering gear (see Part IV, 2.4.4(c)).

2.8.4 Rudder Stocks

(a) Upper Rudder Stocks

The upper rudder stock is that part of the rudder stock above the neck bearing or above the top pintle, as applicable.

$$S = 42\sqrt[3]{Q_R K_s} \qquad \text{mm}$$

where

Q_R	=	rudder torque, as defined in 2.8.3 of this Chapter	kN-m
K_s	=	material factor for upper rudder stock, as defined in 2.8.1(b) of this Chapter	

(b) Lower Rudder Stocks

In determining lower rudder stock scantlings, values of rudder design force and torque calculated in 2.8.2 and 2.8.3 of this Chapter are to be used. Bending moments, shear forces, as well as the reaction forces are to be determined from 2.8.4(d) and 2.8.7(d) of this Chapter, and are to be submitted for review. For rudders supported by shoe pieces or rudder horns, these structures are to be included in the calculation model to account for support of the rudder body. Guidance for calculation of these values is given in Appendix 1 of this Part.

The lower rudder stock diameter is not to be less than obtained from the following equation:

$$S_l = S\sqrt[6]{1 + \left(\frac{4}{3}\right)\left(\frac{M}{Q_R}\right)^2} \qquad \text{mm}$$

where

S	=	upper stock required diameter from 2.8.4(a) of this Chapter	mm
S_l	=	lower stock required diameter	
M	=	bending moment at the section of the rudder stock considered	kN-m
Q_R	=	rudder torque from 2.8.3 of this Chapter	kN-m

Above the neck bearing a gradual transition is to be provided where there is a change in the diameter of the rudder stock.

The equivalent stress of bending and torsion, σ_c to be assessed from the aforementioned direct calculation in the transition is not to exceed 118/K, N/mm^2.

$$\sigma_c = \sqrt{\sigma_b^2 + 3\tau^2} \qquad \text{N/mm}^2$$

where

K	=	material factor for upper rudder stock, as defined in 2.8.1(b) of this Chapter
σ_b	=	$10.2\times10^6 M/S_l^3$
τ	=	$5.1\times10^6 Q_R/S_l^3$

(c) Rudder Trunk and Rudder Stock Sealing

(i) In rudder trunks which are open to the sea, a seal or stuffing box is to be fitted above the deepest load waterline, to prevent water from entering the steering gear compartment and the lubricant from being washed away from the rudder carrier.

(ii) Where the top of the rudder trunk is below the deepest waterline two separate stuffing boxes are to be provided.

(iii) Materials. The steel used for the rudder trunk is to be of weldable quality, with a carbon content not exceeding 0.23% on ladle analysis and a carbon equivalent (Ceq) not exceeding 0.41. Plating materials for rudder trunks are in general not to be of lower grades than corresponding to class II as defined in Table III 1-1 of this Chapter. Rudder trunks comprising of materials other than steel are to be specially considered.

(iv) Scantlings. Where the rudder stock is arranged in a trunk in such a way that the trunk is stressed by forces due to rudder action, the scantlings of the trunk are to be such that the equivalent stress due to bending and shear does not exceed $0.35\sigma_F$, and the bending stress on welded rudder trunk is to be in compliance with the following formula:

$$\sigma \le 80/k \qquad \text{N/mm}^2$$

where

σ	=	bending stress in the rudder trunk	
k	=	K as defined in 2.8.1(b) of this Chapter	for castings
	=	1.0	for ordinary strength hull steel plate
	=	Q as defined in 2.1.1(a)(i) of this Chapter	for higher strength steel plate
		k is not to be taken less than 0.7	
σ_F	=	specified minimum yield strength of the material used	N/mm^2

For calculation of bending stress, the span to be considered is the distance between the mid-height of the lower rudder stock bearing and the point where the trunk is clamped into the shell or the bottom of the skeg.

(v) Welding at the Connection to the Hull. The weld at the connection between the rudder trunk and the shell or the bottom of the skeg is to be full penetration and fillet shoulder is to be applied in way of the weld. The fillet shoulder radius r, in mm (in.) (see Fig. III 2-41 of this Chapter) is to be as large as practicable and to comply with the following:

r	=	60 mm	when $\sigma \ge 40/k$
	=	$0.1S_l$, without being less than 30 mm	when $\sigma < 40/k$

where

S_l = rudder stock diameter axis defined in 2.8.4(b) of this Chapter

σ = bending stress in the rudder trunk N/mm^2

k = material factor as defined in 2.8.4(c)(iv) of this Chapter

The radius may be obtained by grinding. If disk grinding is carried out, score marks are to be avoided in the direction of the weld. The radius is to be checked with a template for accuracy. Four profiles at least are to be checked. A report is to be submitted to the Surveyor.

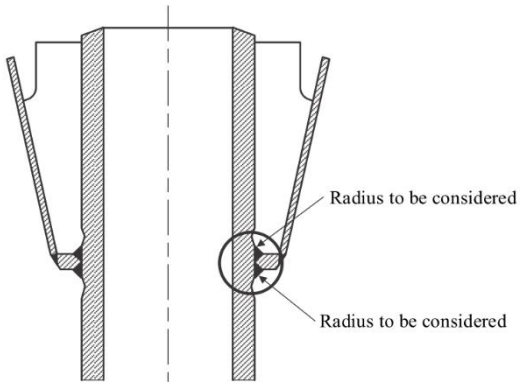

Fig. III 2-41
Fillet Shoulder Radius

(d) Bending Moments

The bending moment on the rudder and rudder stock may be determined in accordance with Appendix 1 of this Part or in accordance with the following equations:

(i) Spade Rudders

$$M_n = C_R l_n \quad \text{kN-m}$$

$$M_s = C_R \frac{A_1}{A} l_c \quad \text{kN-m}$$

where

M_n = bending moment at neck bearing

M_s = bending moment at section under consideration

l_n = distance from center of neck bearing to the centroid of rudder area m

l_c = distance from section under consideration to the centroid of rudder area, A_1 m

A_1 = area below section under consideration m^2

C_R and A are defined in 2.8.2 of this Chapter.

(ii) Balanced Rudders with Shoepiece Support

The bending moment at the neck bearing may be taken as indicated below. Bending moments at other locations are to be determined by direct calculation and are to be submitted. See Appendix 1 of this Part for guidance in calculating bending moments.

$$M_n = N C_R l_b \quad \text{kN-m}$$

where

M_n = bending moment at neck bearing

l_b = distance between center of neck bearing and center of shoepiece pintle bearing m

$$N = \left[\frac{0.5 + \frac{\alpha_1}{8}}{1 + \alpha_1(1 + \frac{l_u}{l_b}\frac{I_b}{I_u})}\right]$$

$$\alpha_1 = \frac{l_b^3}{l_s^3}\frac{I_d}{I_b}$$

I_d = mean moment of inertia of shoepiece about the vertical axis cm^4

l_s = distance between center of shoepiece pintle bearing and the effective support point of the shoepiece in the hull m

I_b = mean moment of inertia of the rudder, considering a width of rudder plating twice the athwartship dimension of the rudder and excluding welded or bolted cover plates for access to pintles, inc. cm^4

l_u distance between center of the neck bearing and the center of the rudder carrier bearing m

I_u = mean moment of inertia of rudder stock, between neck bearing and rudder carrier bearing cm^4

C_R is as defined in 2.8.2 of this Chapter.

2.8.5 Flange Couplings

(a) General

Rudder flange couplings are to comply with the following requirements:

(i) Couplings are to be supported by an ample body of metal worked out from the rudder stock.

(ii) The smallest distance from the edge of the bolt holes to the edge of the flange is not to be less than two-thirds of the bolt diameter.

(iii) Coupling bolts are to be fitted bolts.

(iv) Suitable means are to be provided for locking the nuts in place.

In addition to the above, rudder flange couplings are to meet the type-specific requirements in 2.8.5(b) of this Chapter (horizontal couplings) or 2.8.5(c) of this Chapter (vertical couplings) as applicable.

(b) Horizontal Couplings

(i) Coupling Bolts

There are to be at least six coupling bolts in horizontal couplings, and the diameter, d_b, of each bolt is not to be less than obtained by the following equation:

$$d_b = 0.62\sqrt{d_s^3 K_b/(nrK_s)} \quad \text{mm}$$

where

d_s = required rudder stock diameter, S (2.8.4(a)) or S_1 (2.8.4(b)) of this Chapter as applicable, in way of the coupling

n = total number of bolts in the horizontal coupling

r = mean distance, in mm, of the bolt axes from the center of the bolt system

K_b = material factor for bolts, as defined in 2.8.1(b) of this Chapter

K_s = material factor for stock, as defined in 2.8.1(b) of this Chapter

(ii) Coupling Flange

Coupling flange thickness is not to be less than the greater of the following equations:

$$t_f = d_{bt}\sqrt{K_f/(K_b)} \quad \text{mm}$$

$t_f = 0.9d_{bt}$ mm

where

d_{bt} = calculated bolt diameter as per 2.8.5(b)(i) of this Chapter based on a number of bolts not exceeding 8

K_f = material factor for bolts, as defined in 2.8.1(b) of this Chapter

K_b = material factor for bolts, as defined in 2.8.1(b) of this Chapter

(iii) Joint between Rudder Stock and Coupling Flange

The welded joint between the rudder stock and the flange is to be made in accordance with Fig. III 2-42 of this Chapter or equivalent.

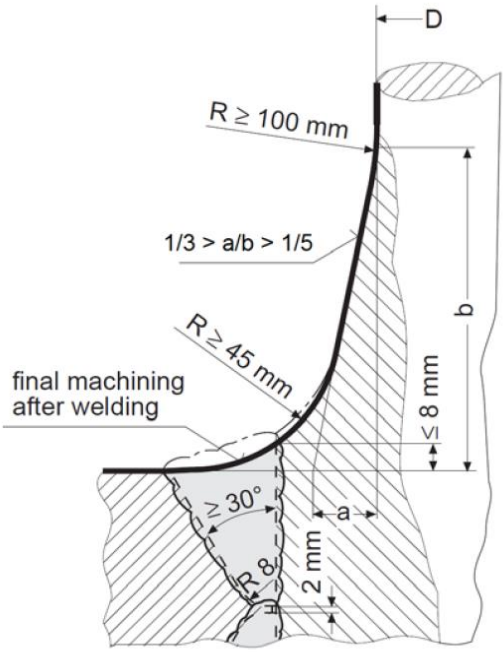

Fig. III 2-42
Welded Joint between Rudder Stock and Coupling Flange

(c) Vertical Couplings

(i) Coupling Bolts

There are to be at least eight coupling bolts in vertical couplings, and the diameter, d_b, of each bolt is not to be less than obtained by the following equation:

$d_b = 0.81d_s\sqrt{K_b/(nK_s)}$ mm

where

n = total number of bolts in the vertical coupling, which is not to be less than 8

d_s, K_b, K_s are as defined in 2.8.5(b) of this Chapter.

In addition, the first moment of area, m, of the bolts about the center of the coupling is not to be less than given by the following equation:

$m = 0.00043d_s^3$ mm^3

where

d_s = diameter as defined in 2.8.5(b) of this Chapter

(ii) Coupling Flange

Coupling flange thickness, t_f, is not to be less than d_b, as defined in 2.8.5(c)(i) of this Chapter.

(iii) Joint between Rudder Stock and Coupling Flange

The welded joint between the rudder stock and the flange is to be made in accordance with Fig. III 2-42 of this Chapter or equivalent.

2.8.6 Tapered Stock Couplings

(a) Coupling Taper

Tapered stock couplings are to comply with the following general requirements in addition to type-specific requirements given in 2.8.6(b) or 2.8.6(c) of this Chapter as applicable:

(i) Tapered stocks, as shown in Fig. III 2-43 of this Chapter, are to be effectively secured to the rudder casting by a nut on the end.

(ii) The cone shapes are to fit exactly.

(iii) Taper length (l) in the casting is generally not to be less than 1.5 times the stock diameter (d_o) as shown in Fig. III 2-43 of this Chapter.

(iv) The taper on diameter (c) is to be 1/12 to 1/8 for keyed taper couplings and 1/20 to 1/12 for couplings with hydraulic mounting/dismounting arrangements, as shown in the following table.

(v) Where mounting with an oil injection and hydraulic nut, the push-up oil pressure and the push-up length are to be specially considered upon submission of calculations.

(vi) Means of effective sealing are to be provided against sea water ingress.

Type of Coupling Assembly	$c = \frac{d_o - d_u}{l}$
Without hydraulic mounting/dismounting	$1/12 \le c \le 1/8$
With hydraulic mounting/dismounting	$1/20 \le c \le 1/12$

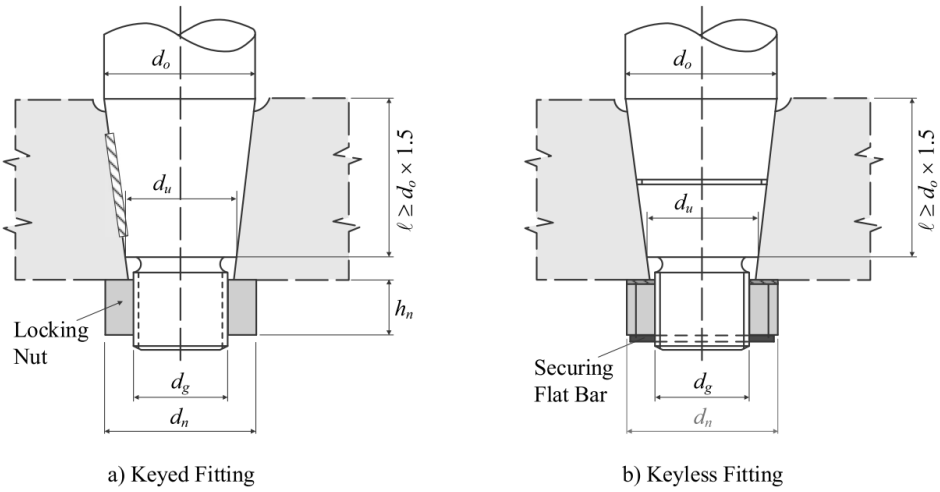

Fig. III 2-43
Tapered Couplings

(b) Keyed Fitting

Where the stock, it is to be fitted in accordance with the following:

(i) The top of the keyway is to be located well below the top of the rudder.

(ii) Torsional strength of the key equivalent to that of the required upper stock is to be provided.

(iii) For the couplings between stock and rudder the shear area* of the key is not to be less than:

$$a_s = \frac{17.55 Q_F}{d_k \sigma_{F1}} \qquad \text{cm}^2$$

where

Q_F = design yield moment of rudder stock N-m
= $0.02664\ d_t^3/K$

*Note: The effective area is to be the gross area reduced by any area removed by saw cuts, set screw holes, chamfer, etc., and is to exclude the portion of the key in way of spooning of the key way.

Where the actual diameter d_{ta} is greater than the calculated diameter d_t , the diameter d_{ta} is to be used. However, d_{ta} applied to the above formula need not be taken greater than 1.145 d_t.

d_t = stock diameter, in mm, according to 2.8.4(a) of this Chapter

K = material factor for stock as given in 2.8.1(b) of this Chapter

d_k = mean diameter of the conical part of the rudder stock, in mm, at the key

σ_{F1} = minimum yield stress of the key material, in N/mm^2

The effective surface area, in cm^2, of the key (without rounded edges) between key and rudder stock or cone coupling is not to be less than:

$$a_k = \frac{5 Q_F}{d_k \sigma_{F2}} \qquad \text{cm}^2$$

where:

σ_{F2} = minimum yield stress of the key, stock or coupling material, whichever is less. N/mm^2

(iv) In general, the key material is to be at least of equal strength to the keyway material. For keys of higher strength materials, shear and bearing areas of keys and keyways may be based on the respective material properties of the keys and the keyways, provided that compatibilities in mechanical properties of both components are fully considered. In no case, is the bearing stress of the key on the keyway to exceed 90% of the specified minimum yield strength of the keyway material.

(v) Push up. It is to be proved that 50% of the design yield moment is solely transmitted by friction in the cone couplings. This can be done by calculating the required push-up pressure and push-up length according to 2.8.6(c)(v) and 2.8.6(c)(vi) of this Chapter for a torsional moment $Q'_F = 0.5Q_F$.

Notwithstanding the requirements in 2.8.6(c)(iii) and 2.8.6(c)(v) of this Chapter, where a key is fitted to the coupling between stock and rudder and it is considered that the entire rudder torque is transmitted by the key at the couplings.

(c) Keyless Fitting

Hydraulic and shrink fit keyless couplings are to be fitted in accordance with the following:

(i) Detailed preloading stress calculations and fitting instructions are to be submitted;

(ii) Preload stress is not to exceed 70% of the minimum yield strength of either the stock or the bore;

(iii) Prior to applying hydraulic pressure, at least 75% of theoretical contact area of rudder stock and rudder bore is to be achieved in an evenly distributed manner;

(iv) The upper edge of the upper main piece bore is to have a slight radius;

(v) Push-up Pressure. The push-up pressure is not to be less than the greater of the two following values:

$$p_{req1} = \frac{2Q_F}{d_m^2 l \pi \mu_o} 10^3 \qquad \text{N/mm}^2$$

$$p_{req2} = \frac{6M_b}{l^2 d_m} 10^3 \qquad \text{N/mm}^2$$

where

Q_F = design yield moment of rudder stock,as defined in 2.8.6(b)(iii) of this Chapter N-m

d_m	=	mean cone diameter	mm
l	=	cone length	mm
μ_0	=	frictional coefficient, equal to 0.15	
M_b	=	bending moment in the cone coupling (e.g. in case of spade rudders)	N-m

It has to be proved by the designer that the push-up pressure does not exceed the permissible surface pressure in the cone. The permissible surface pressure is to be determined by the following formula:

$$p_{perm} = \frac{0.8R_{eH}(1-\alpha^2)}{\sqrt{3+\alpha^4}} \quad \text{N/mm}^2$$

where:

R_{eH}	=	minimum yield stress of the material of the gudgeon	N/mm^2
α	=	d_m / d_a	
d_m	=	mean cone diameter	mm
d_a	=	outer diameter of the gudgeon to be not less than 1.5 d_m	mm

(vi) Push-up Length. The push-up length Δl, in mm, Δl is to comply with the following formula:

$$\Delta l_1 \leq \Delta l \leq \Delta l_2$$

where

$$\Delta l_1 = \frac{p_{req} d_m}{E\left(\frac{1-\alpha^2}{2}\right)c} + \frac{0.8R_{tm}}{c} \quad \text{mm}$$

$$\Delta l_2 = \frac{1.6R_{eH}d_m}{Ec\sqrt{3+a^4}} + \frac{0.8R_{tm}}{c} \quad \text{mm}$$

R_{tm}	=	mean roughness, taken equal to 0.01	mm
c	=	taper on diameter according to 2.8.6(a)(iv)	
R_{eH}	=	minimum yield stress of the material of the gudgeon	N/mm^2
E	=	Young's modulus of the material of the gudgeon	N/mm^2

R_{eh}, α, and d_m are as defined in 2.8.6(c)(v).

Notwithstanding the above, the push up length is not to be less than 2 mm.

Note: In case of hydraulic pressure connections the required push-up force P_e for the cone may be determined by the following formula:

$$P_e = p_{req} d_m \pi l (\frac{c}{2} + 0.02) \quad \text{N}$$

The value 0.02 is a reference for the friction coefficient using oil pressure. It varies and depends on the mechanical treatment and roughness of the details to be fixed. Where due to the fitting procedure a partial push-up effect caused by the rudder weight is given, this may be taken into account when fixing the required push-up length, subject to approval by the Society.

(vii) Couplings with Special Arrangements for Mounting and Dismounting the Couplings. Where the stock diameter exceeds 200 mm, the press fit is recommended to be effected by a hydraulic pressure connection. In such cases the cone is to be more slender, c ≈1:12 to ≈1:20. In case of hydraulic pressure connections the nut is to be effectively secured against the rudder stock or the pintle. For the safe transmission of the torsional moment by the coupling between rudder stock and rudder body the push-up pressure and the push-up length are to be determined according to 2.8.6(c)(v) and 2.8.6(c)(vi) of this Chapter, respectively.

(viii) The locking nut is to be fitted in accordance with 2.8.6(d) of this Chapter.

(d) Locking Nut

Dimensions of the securing nut, as shown in Fig. III 2-43 of this Chapter, are to be proportioned in accordance with the following and the nut is to be fitted with an effective locking device.

Height	$h_n \geq 0.6\ d_g$
Outer diameter of nut	$d_n \geq 1.2\ d_u$ or $1.5d_g$, whichever is greater
External thread diameter	$d_g \geq 0.65\ d_o$

In the case of a hydraulic pressure secured nut, a securing device such as a securing flat bar is to be provided. Calculations proving the effectiveness of the securing device are to be submitted.

2.8.7 Pintles

(a) General

Pintles are to have a conical attachment to the gudgeons with a taper on diameter of:

1/12 to 1/8 for keyed and other manually assembled pintles with locking nut.

1/20 to 1/12 for pintle mounted with oil injection and hydraulic nut.

(b) Diameter

$$d_p = 11.1\sqrt{BK_p} \qquad \text{mm}$$

where

B	=	bearing force, in N, from 2.8.7(d) of this Chapter but not to be taken less than B_{min} as specified in Table III 2-25 of this Chapter	kN
K_p	=	material factor for the pintle, as defined in 2.8.1(b) of this Chapter	

For rudders on horns with two pintles, as shown in Fig. III 2-40 of this Chapter, calculations are to include pintle bearing forces with the craft running ahead at the maximum continuous rated shaft rpm and at the lightest operating draft.

Threads and nuts are to be in accordance with 2.8.6(d) of this Chapter.

The pintle and pintle boss are to comply with the following requirements:

(i) The depth of the pintle boss is not to be less than the pintle diameter, d_p.

(ii) The bearing length of the pintle is to be between 1.0 and 1.2 times the pintle diameter, where d_p is measured on the outside of the liner.

(iii) The bearing pressure is to be in accordance with 2.8.8(a) of this Chapter.

(iv) The thickness of the pintle housing is not to be less than 25% of the pintle diameter.

Table III 2-25
Minimum Bearing Force B_{min}

Pintle Type		B_{min}
Conventional two pintle rudder		$0.5C_R$
Fig. III A1-4 of this Part	lower pintle	$0.5C_R$
Fig. III A1-4 of this Part	main pintle	$C_R l_a/l_p$*
Fig. III A1-3 of this Part	main pintle	$C_R l_a/l_p$*
	upper pintle	$0.25C_R$

* $B_{min} = C_R$ where $l_a/l_p \geq 1$

l_a/l_p as described in Fig. III 2-44 of this Chapter

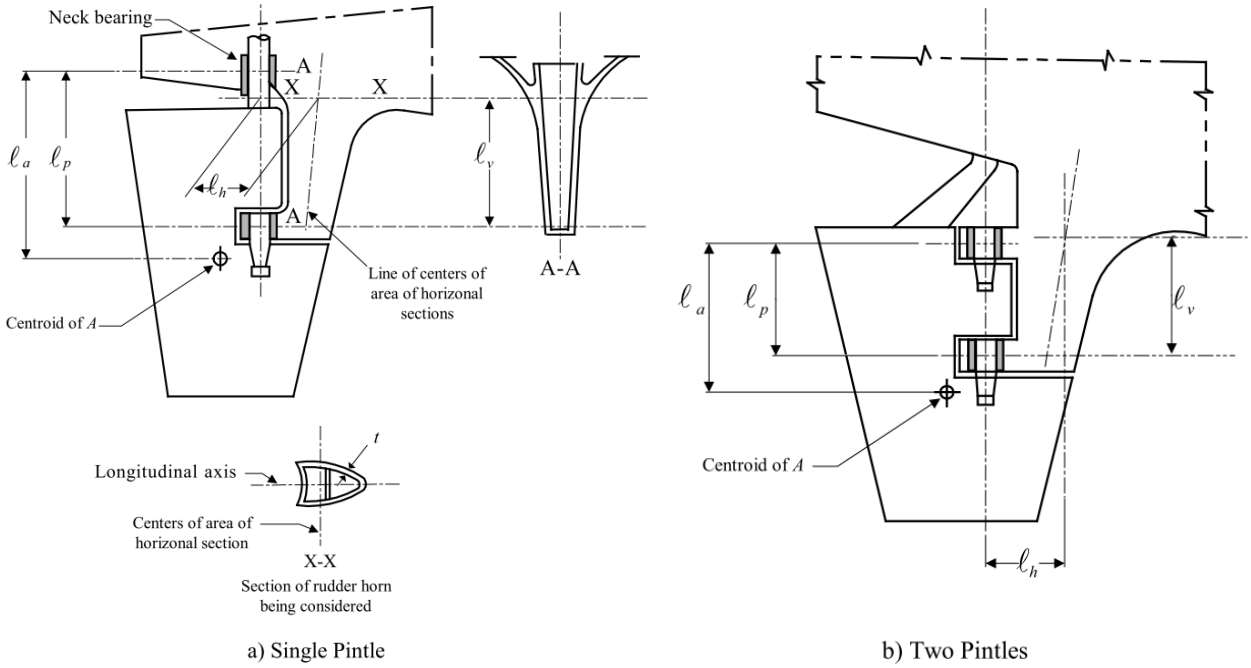

a) Single Pintle b) Two Pintles

Fig. III 2-44
Rudder Horn

(c) Push-up Pressure and Push-up Length

The required push-up pressure preq for pintle bearings, in N/mm², is to be determined by the following formula:

$$p_{req} = 0.4\frac{B_1 d_o}{d_m^2 l} \qquad \text{N/mm}^2$$

where:

B_1	=	supporting force in the pintle bearing	N
d_0	=	actual pintle diameter excluding the liner	mm
d_m	=	mean cone diameter	mm
l	=	cone length	mm

The push up length is to be calculated similarly as in 2.8.6(c)(vi) of this Chapter, using required push-up pressure and properties for the pintle bearing.

(d) Shear and Bearing Forces

The shear and bearing forces may be determined in accordance with Appendix 1 of this Part, or by the equations given below.

(i) Spade Rudder

Bearing force at rudder carrier: $P_u = \frac{M_n}{l_u}$ kN

Bearing force at neck bearing: $P_n = C_R + P_u$ kN

Shear force at neck bearing: $F_n = C_R$ kN

where C_R is as defined in 2.8.3 and M_n, l_u are as defined in 2.8.4(d) of this Chapter.

(ii) Balanced Rudder with Shoepiece Support

Bearing force at rudder carrier: $P_u = \frac{M_n}{l_u}$ kN

Bearing force at neck bearing: $P_n = P_u\left(1 + \frac{l_u}{l_b}\right) + \frac{C_R}{l_b}\left(\frac{l_R}{2} + l_p\right)$ kN

where

l_b = distance between the center of neck bearing support and the center of shoepiece support, as shown in Fig. III A1-2 of this Part

= $l_p + l_r + l_l$

l_p = distance between bottom of rudder blade and center of support of neck bearing

l_l = distance between top of rudder blade and center of support of neck bearing

Bearing force at shoepiece: $P_p = C_R + P_u - P_n$ kN

Shear force at neck bearing: $F_n = P_n - P_u$ kN

where C_R is as defined in 2.8.2 of this Chapter.

2.8.8 Supporting and Anti-Lifting Arrangements

(a) Bearings

(i) Bearing Surfaces

Bearing surfaces for rudder stocks, shafts and pintles are to meet the following requirements:

(1) The length/diameter ratio (l_b/d_l) of the of bearing surface is not to be greater than 1.2*

(2) The projected area of the bearing surface ($A_b = d_l\, l_b$) is not to be less than A_{bmin},

where

d_l = outer diameter of the liner mm

l_b = bearing length mm

A_{bmin} = $1000\frac{P}{p_a}$ mm^2

P = bearing reaction force, as determined from Table III 2-26 of this Chapter kN

p_a = allowable surface pressure, as indicated in Table III 2-27 of this Chapter depending on bearing material N/mm^2

* Request for bearing arrangement of length/diameter ratio greater than 1.2 is subject to special consideration provided that calculations are submitted to show acceptable clearance at both ends of the bearing.

(ii) Bearing Clearance

(1) The clearance for metal bearings is not to be less than $d_i/1000+1.0$ mm on the diameter, where d_i is the inner diameter of the bushing, in mm.

(2) The clearance for non-metallic bearings is to be specially determined considering the material's swelling and thermal expansion properties. This clearance in general is not to be taken less than 1.5 mm on diameter*.

* Request of clearance less than 1.5 mm for non-metallic bearings is subject to special considerations provided that documented evidence, such as manufacturer's recommendation on acceptable clearance, expansion allowance and satisfactory service history with reduced clearances, are submitted for review.

For spade rudders with a rudder stock diameter of 400 mm or less, the clearances on the diameter are not to be less than given below:

Stock Diameter, mm	Metallic Bushing, mm	Synthetic Bushing(1), mm
400	1.15	1.15+E(2)
300	0.85	0.85+E
200	0.78	0.78+E
100	0.75	0.75+E

Notes:

(1) The bushing manufacturer's recommended running clearance may be used as an alternative to these clearances.

(2) E = expansion allowance provided by bushing manufacturer, mm.

(iii) Bearing Pressure

Bearing pressure is to be accordance with Table III 2-27 of this Chapter.

(iv) Bearing Material

Where stainless steel or wear-resistant steel is used for liners or bearings, the material properties including chemical composition of both components are to be submitted for review for an approved combination.

(v) Liners and Bushes

(1) Rudder Stock Bearings. Liners and bushes are to be fitted in way of bearings. The minimum thickness of liners and bushes is to be equal to:

t_{min} = 8 mm for metallic materials and synthetic material

t_{min} = 22 mm for lignum material

(2) Pintle Bearings

a) The thickness of any liner or bush is neither to be less than:

$$t = 0.01\sqrt{B} \quad \text{mm}$$

where

B = bearing force N

nor than the minimum thickness defined in 2.8.8(a)(v)(1) of this Chapter.

b) The bearing length L_P of the pintle is to be in accordance with 2.8.8(a)(i) of this Chapter.

Table III 2-26
Bearing Reaction Force

Bearing Type	P, Bearing Reaction Force, kN
Pintle bearings	P = B as defined in 2.8.7
Other bearings	Calculation of P is to be submitted. Guidelines for calculation can be found in Appendix 1 of this Part

Table III 2-27
Allowable Bearing Surface Pressure

Bearing Material	p_a, N/mm^2
lignum vitae	2.5
white metal, oil lubricated	4.5
synthetic material with hardness between 60 and 70 Shore D(1)	5.5(2)
steel (3) and bronze and hot-pressed bronze-graphite materials	7.0

Notes:

(1) Indentation hardness test at 23°C and with 50% moisture, according to a recognized standard. Synthetic bearing materials to be of approved type.

(2) Higher values than given in the table may be taken if they are verified by tests, but in no case more than 10 N/mm^2.

(3) Stainless and wear-resistant steel in an approved combination with stock liner.

(b) Rudder Carrier

(i) The weight of the rudder assembly is to be supported by a rudder carrier mounted on the hull structure designed for that purpose.

(ii) At least half of the rudder carrier's holding-down bolts are to be fitted bolts. Alternative means of preventing horizontal movement of the rudder carrier may be considered.

(iii) The bearing part is to be well lubricated by dripping oil, automatic grease feeding, or a similar method.

(iv) Hull structures in way of the rudder carrier are to be suitably strengthened.

(c) Anti Lifting Devices

Means are to be provided to prevent accidental unshipping or undue movement of the rudder which may cause damage to the steering gear. There are to be at least two bolts in the joint of the anti-lifting ring.

2.8.9 Double Plate Rudder

(a) Strength

The section modulus and web area of the rudder mainpiece are to be such that the stresses indicated in the following Subparagraphs are not exceeded.

In calculating the section modulus of the rudder, the effective width of side plating is to be taken as not greater than twice the athwartship dimension of the rudder. Bolted cover plates on access openings to pintles are not to be considered effective in determining the section modulus of the rudder. In order for a cover plate to be considered effective, it is to be closed using a full penetration weld and confirmed suitable by non-destructive testing method. Generous radii are to be provided at abrupt changes in section where there are stress concentrations, including in way of openings and cover plates. When inspection windows are located in the panel below the rudder hub, the stress is to be as permitted in way of cutouts.

Moments, shear forces and reaction forces are to be as given in 2.8.4(d) and 2.8.7(d) of this Chapter.

For spade rudders and rudders with horns, the section modulus at the bottom of the rudder is not to be less than one-third the required section modulus of the rudder at the top of the rudder or at the center of the lowest pintle.

Special attention is to be paid in design and construction of rudders with slender foil sections in the vicinity of their trailing edge (e.g., hollow foil sections, fishtail foil sections). Where the width of the rudder blade at the aftermost vertical diaphragm, w, is equal or less than 1/6 of the trailing edge length measured between the diaphragm and the trailing edge, *l*, finite element vibration analysis of the rudder blade is also to be submitted for review. See Fig. III 2-45 of this Chapter.

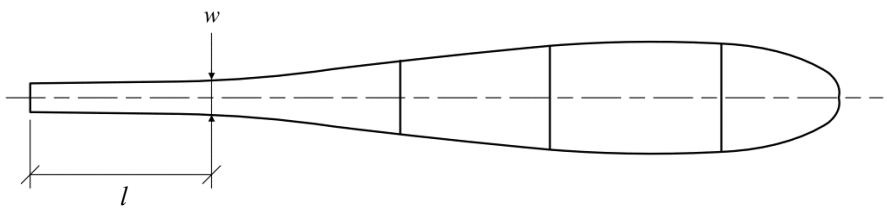

Fig. III 2-45

Spade rudders with an embedded rudder trunk are to have a trailing edge with dimensions that satisfy the following requirements:

- For a rudder trailing edge having a monotonous transition to a rounded end with a finite thickness or diameter (see Fig. III 2-46 of this Chapter), the vortex shedding frequency calculated using the equation given below is to be higher than 35 Hz.

$$f_s = \frac{S_1 U}{\beta_D D + \beta_T T}$$

where

f_s	=	vortex shedding frequency	Hz
U	=	flow velocity, which is taken as craft's design speed with craft running ahead at the maximum continuous rated shaft rpm and at the summer load waterline	m/s
S_t	=	nominal Strouhal number	
	=	0.18	
β_D	=	0.27	
C	=	minimal chord length of rudder cross section profile	m
D	=	nominal boundary layer thickness at trailing edge	
	=	0.01C	
β_T	=	0.77	
T	=	thickness or diameter of rounded end	

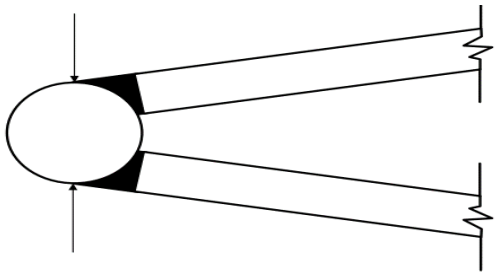

Fig. III 2-46
Thickness or Diameter of Rounded End

- For a rudder trailing edge with a flat insert plate (see Fig. III 2-47 of this Chapter), the insert plate thickness, t_0, is to be no larger than $1.5V_d$ in mm, where V_d is the design speed in ahead condition, in knots, as defined in 2.8.2(a) of this Chapter. The extension beyond the weld to rudder plate, *l*, is to satisfy the following Fig. III 2-47 of this Chapter and with consideration of possible local vibratory bending of the insert plate.

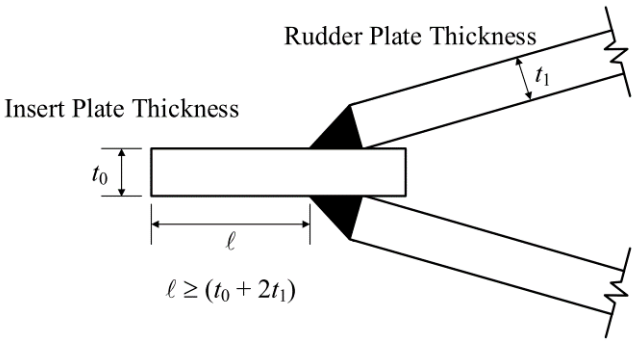

Fig. III 2-47

Alternatively, a vibration analysis is to be carried out to confirm that the natural frequency of the rudder is to be at least ±20% away from the vortex shedding frequency preferably determined using either a detailed

numerical analysis method such as CFD or testing for ballast and full draft at 85% and 100% V_d as defined in 2.8.2(a) of this Chapter.

(i) Clear of Cut-outs

Bending stress	$\sigma_b = 110/Q$	N/mm^2
Shear stress	$\tau = 50/Q$	N/mm^2
Equivalent stress	$\sigma_e = \sqrt{\sigma_b^2 + 3\tau^2} = 120/Q$	N/mm^2

Q = as defined in 2.1.1(a)(i) of this Chapter

(ii) In way of Cut-outs

Allowable stresses for determning the rudder strength in way of cutouts (see Fig. III 2-48 of this Chapter) are as follows:

Bending stress	$\sigma_b = 75/Q$	N/mm^2
Shear stress	$\tau = 50/Q$	N/mm^2
Equivalent stress	$\sigma_e = \sqrt{\sigma_b^2 + 3\tau^2} = 100/Q$	N/mm^2

Q = as defined in 2.1.1(a)(i) of this Chapter

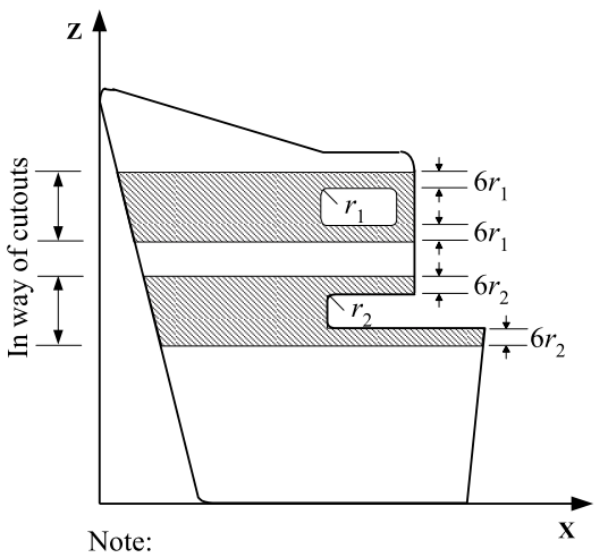

Note:
r_1 = corner radius of rudder plate in way of portable bolted inspection hole
r_2 = corner radius of rudder plate

Fig. III 2-48

The mainpiece of the rudder is to be formed by the rudder side plating (but not more than the effective width indicated above) and vertical diaphragms extending the length of the rudder or the extension of the rudder stock or a combination of both.

(b) Side, Top and Bottom Plating

The plating thickness is not to be less than obtained from the following equation:

$$t = 0.0055 s\beta \sqrt{d + \left(\frac{0.1 C_R}{A}\right)} \times \sqrt{Q} + 2.5 \qquad \text{mm}$$

where

d	=	summer loadline draft of the craft	m
C_R	=	rudder force according to 2.8.2 of this Chapter	kN
A	=	rudder area	m^2
s	=	smaller unsupported dimension of plating	mm
b	=	greater unsupported dimension of plating	mm
β	=	$\sqrt{1.1 - 0.5(s/b)^2}$; maximum 1.0 for b/s ≥ 2.5	
Q	=	material factor for rudder plating, as defined in 2.1.1(a)(i) of this Chapter	mm

The thickness of the rudder side or bottom plating is to be at least 2 mm greater than that required by 2.3.1(b) of this Chapter with p obtained from 2.2.5(a) of this Chapter, for which h is measured from the lower edge of the plate to the design load waterline in displacement mode.

The rudder side plating in way of the solid part is to be of increased thickness per 2.8.9(d) of this Chapter.

(c) Diaphragm Plates

Vertical and horizontal diaphragms are to be fitted within the rudder, effectively attached to each other and to the side plating. Vertical diaphragms are to be spaced approximately 1.5 times the spacing of horizontal diaphragms. Openings are in general not to be more than 0.5 times the depth of the web.

The thickness of diaphragm plates is not to be less than 70% of the required rudder side plate thickness or 8 mm, whichever is greater. Openings in diaphragms are to have generous radii and the effects of openings are to be considered in the strength assessment as required in 2.8.9(a) of this Chapter.

The diaphragm plating in way of the solid part is to be of increased thickness for vertical and horizontal diaphragm plates per 2.8.9(d) of this Chapter.

(d) Connections of Rudder Blade Structure with Solid Parts

Solid parts in forged or cast steel, which house the rudder stock or the pintle, are normally to be provided with protrusions.

These protrusions are not required when the diaphragm plate thickness is less than:

- 10 mm for diaphragm plates welded to the solid part on which the lower pintle of a semi-spade rudder is housed and for vertical diaphragm plates welded to the solid part of the rudder stock coupling of spade rudders.
- 20 mm for other diaphragm plates.

The solid parts are in general to be connected to the rudder structure by means of two horizontal diaphragm plates and two vertical diaphragm plates.

Minimum section modulus of the connection with the rudder stock housing.

The section modulus of the cross-section of the structure of the rudder blade formed by vertical diaphragm plates and rudder plating, which is connected with the solid part where the rudder stock is housed is to be not less than:

$$w_s = c_s S_l^3 \left(\frac{H_E - H_X}{H_E}\right) \frac{Q}{K_s} 10^{-4} \qquad \text{cm}^3$$

where

c_s	=	coefficient, to be taken equal to:	
	=	1.0	if there is no opening in the rudder plating or if such openings are closed by a full penetration welded plate
	=	1.5	if there is an opening in the considered cross-section of the rudder

S_l = rudder stock diameter mm

H_E = vertical distance between the lower edge of the rudder blade and the upper edge of t he solid part m

H_X = vertical distance between the considered cross-section and the upper edge of the solid m part as indicated in Fig. III 2-49 of this Chapter m

Q = material factor for the rudder blade plating as given in 2.8.9(a) of this Chapter

K_s = material factor for the rudder stock as given in 2.8.1(b) of this Chapter

The actual section modulus of the cross-section of the structure of the rudder blade is to be calculated with respect to the symmetrical axis of the rudder.

The breadth of the rudder plating to be considered for the calculation of section modulus is to be not greater than:

$b = s_v + 2H_X/3$ m

where

s_v = spacing between the two vertical diaphragm (see Fig. III 2-49 of this Chapter) m

Where openings for access to the rudder stock nut are not closed by a full penetration welded plate, they are to be deducted.

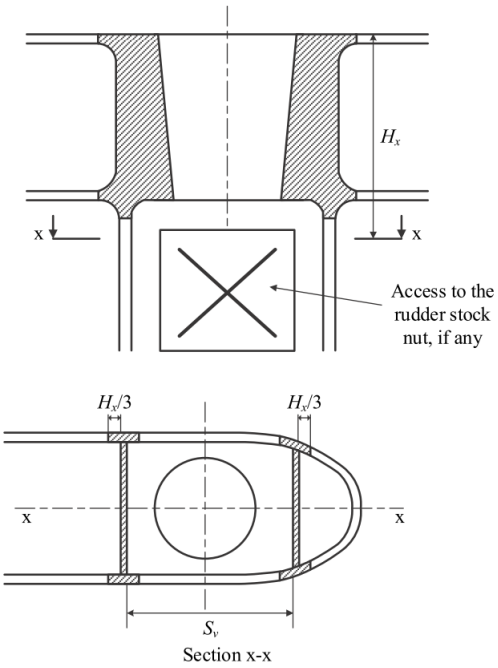

Fig. III 2-49
Cross-section of the Connection Between Rudder Blade Structure and Rudder Stock Housing

The thickness of the horizontal diaphragm plates connected to the solid parts, in mm (in.), as well as that of the rudder blade plating between these diaphragms, is to be not less than the greater of the following values:

$t_H = 1.2t$ mm

$t_H = 0.0045d_s^2/s_H$ mm

where

t = defined in 2.8.9(b)

d_s = diameter, to be taken equal to: mm

= S_l as per 2.8.4(b), for the solid part housing the rudder stock

= d_p as per 2.8.7(a), for the solid part housing the pintle

s_H = spacing between the two horizontal diaphragm plates mm

The increased thickness of the horizontal diaphragms is to extend fore and aft of the solid part at least to the next vertical diaphragm.

The thickness of the vertical diaphragm plates welded to the solid part where the rudder stock is housed as well as the thickness of the rudder side plating under this solid part is to be not less than the values obtained, in mm, from Table III 2-28 of this Chapter.

The increased thickness of vertical diaphragm plates is to extend below the solid piece at least to the next horizontal diaphragm.

Table III 2-28
Thickness of Side Plating and Vertical Diaphragm Plates

Type of Rudder	Thickness of Vertical Diaphragm Plates, in mm		Thickness of Rudder Plating, in mm	
	Rudder Blade without Opening	Rudder Blade with Opening	Rudder Blade without Opening	Area with Opening
Rudder supported by sole piece	1.2t	1.6t	1.2t	1.4t
Semi-spade and spade rudders	1.4t	2.0t	1.3t	1.6t

t = thickness of the rudder plating, in mm, as defined in 2.8.9(b) of this Chapter

(e) Welding and Design Details

(i) Slot-welding is to be limited as far as possible. Slot welding is not to be used in areas with large in-plane stresses transversely to the slots or in way of cut-out areas of semi-spade rudders.

(ii) When slot welding is applied, the length of slots is to be minimum 75 mm with breadth of 2t, where t is the rudder plate thickness, in mm. The distance between ends of slots is not to be more than 125 mm. The slots are to be fillet welded around the edges and filled with a suitable compound (e.g., epoxy putty). Slots are not to be filled with weld.

(iii) Grove welds with structural backing/backing bar (continuous type slot weld) may be used for double-plate rudder welding. In that case, the root gap is to be between 6 to 10 mm and the bevel angle is to be at least 15°.

(iv) In way of the rudder horn recess of semi-spade rudders the radii in the rudder plating are not to be less than 5 times the plate thickness, but in no case less than 100 mm. Welding in side plate are to be avoided in or at the end of the radii. Edges of side plate and weld adjacent to radii are to be ground smooth.

(v) Welds between plates and heavy pieces (solid parts in forged or cast steel or very thick plating) are to be made as full penetration welds. In way of highly stressed areas (e.g., cut-out of semi-spade rudder and upper part of spade rudder), cast or welding on ribs is to be arranged. Two sided full penetration welding is normally to be arranged. Where back welding is impossible welding is to be performed against ceramic backing bars or equivalent. Steel backing bars may be used and are to be continuously welded on one side to the heavy piece.

(f) Watertightness

The rudder is to be watertight and is to be tested in accordance with 7.1 of this Part.

2.8.10 Single Plate Rudder

(a) Mainpiece Diameter

The mainpiece diameter is calculated according to 2.8.4(b) of this Chapter. For spade rudders, the lower third may be tapered down to 0.75 times stock diameter at the bottom of the rudder.

(b) Blade Thickness

The blade thickness is not to be less than obtained from the following equation:

$$t_b = 0.0015sV_R + 2.5 \qquad \text{mm}$$

where

s	=	spacing of stiffening arms, not to exceed 1000 mm	mm
V_R	=	speed, as defined in 2.8.2(a) of this Chapter	

(c) Arms

The thickness of the arms is not to be less than the blade thickness obtained in 2.8.10(b) of this Chapter. The section modulus of each set of arms about the axis of the rudder stock is not to be less than obtained from the following equation:

$$SM = 0.0005sC_1^2V^2 \qquad \text{cm}^3$$

where

C_1	=	horizontal distance from the aft edge of the rudder to the centerline of the rudder stock	m
Q	=	as defined in 2.1.1(a)(i) of this Chapter	

s, V_R are defined in 2.8.10(b) of this Chapter.

2.8.11 Shelled Rudder Blades

Rudder blades that are constructed out of cast resilient polymers or filled FRP shells are to have a solid metallic core that complies with the requirements for single plate rudders, see 2.8.10 of this Chapter.

2.9 Protection of Deck Openings

2.9.1 General

All openings in decks are to be framed to provide efficient support and attachment for the ends of the deck beams. The proposed arrangement and details for all hatchways are to be submitted for approval.

2.9.2 Position of Deck Openings

For the purpose of these Rules, two positions of deck openings are defined as follows:

(a) Position 1

Upon exposed main and raised quarter decks, and upon exposed superstructure decks situated forward of a point located a quarter of the craft length from the forward perpendicular.

(b) Position 2

Upon exposed superstructure decks situated abaft a quarter of the craft length from the forward perpendicularand located at least one standard height of superstructure above the freeboard deck.

Upon exposed superstructure decks situated forward of a point located a quarter of the ship’s length from the forward perpendicular and located at least two standard height of superstructure above the freeboard deck.

2.9.3 Hatchway Coamings, Companionway Sills and Access Sills

(a) Coaming and Sill Heights

The heights above deck of the coamings, the sills of companionways and access openings, are to be not less than given in Table III 2-29 of this Chapter. Where hatch covers are substantially constructed and made tight by means of gaskets and clamping devices, these heights may be reduced, or the coamings omitted entirely, provided that the safety of the craft is not thereby impaired in any sea conditions. Sealing arrangements are to be weathertight if coaming is fitted, and watertight for flush covers.

Table III 2-29
Coamings and Sill Heights

L equal to or over 24 meters in length		
	Position 1	Position 2
Hatch Coamings	600 mm	450 mm
Companionway Sills	600 mm	380 mm
Access Sills	380 mm	380 mm
L under 24 meters in length		
	Position 1	Position 2
Hatch Coamings and Companionways	450 mm	300 mm
Access Sills	380 mm	300 mm

Note:
For craft with L < 24 m, the coaming/sill height is to be as indicated above.

2.9.4 Enclosed Superstructures

To be considered enclosed, superstructures are to meet the following requirements. Superstructures with openings which do not fully comply with these requirements are to be considered as open superstructures. See also 2.11.2(d) of this Chapter.

(a) Closing Appliances

All openings in the bulkheads of enclosed superstructures are to be provided with efficient means of closing, so that in any sea conditions water will not penetrate the craft. Opening and closing appliances are to be framed and stiffened so that the whole structure, when closed, is equivalent to the unpierced bulkhead.

Doors for access openings into enclosed superstructures are to be of steel or other approved material, permanently and strongly attached to the bulkhead. The doors are to be provided with gaskets and clamping devices, or other equivalent arrangements, permanently attached to the bulkhead or to the doors themselves, and the doors are to be so arranged that they can be operated from both sides of the bulkhead. The construction of the doors is to be as required in 2.5.1(g) of this Chapter.

Portlights and windows in the end bulkheads of enclosed superstructures are to be of substantial construction and provided with efficient inside deadlights, as required in 2.11.3 of this Chapter.

The location and means of the closing appliances for windows are to be in accordance with 2.11.4 of this Chapter.

(b) Sills of Access Openings

Except as otherwise provided in these Rules, the height of the sills of access openings in bulkheads at the ends of enclosed superstructures is to be at least 380 mm above the deck. See Table III 2-29 of this Chapter for required sill heights.

(c) Means of Access

Superstructures are not to be regarded as enclosed unless access is provided for the crew to reach machinery and other working spaces inside these superstructures by alternate means which are available at all times when bulkhead openings are closed.

2.9.5 Hatchways Closed by Covers of Steel and Fitted with Gaskets and Clamping Devices

(a) Strength of Covers

The maximum allowable stress and deflection under design load, w, and the minimum top plate thickness are as follows:

Maximum allowable stress	$0.235\sigma_u$
Maximum allowable deflection	0.0028s
Top plate thickness	0.01s, but not less than, 6.0 mm

Position 1

$w = 0.097L + 7.45$ kN/m^2

Position 2

$w = 0.0709L + 5.65$ kN/m^2

where:

w	=	design load	kN/m^2
L	=	length of craft, as defined in 1.1 of this Part, but is not to be taken less than 24 m.	m
s	=	stiffener spacing	mm
σ_u	=	minimum ultimate tensile strength	N/mm^2

(b) Means for Securing Weathertightness

The means for securing and maintaining weathertightness is to be such that the tightness can be maintained in any sea condition. The covers are to be hose tested in position under a water pressure of at least 2.1 bar at the time of installation.

(c) Flush Hatch Covers

Where flush hatch covers are fitted on the freeboard deck within the forward one-fourth length, and the craft is operating with low freeboard (e.g., assigned a freeboard less than Type-B under the International Convention on Load Lines 1966), the assumed loads on flush hatch covers are to be increased 15% over that indicated in 2.9.5(a) of this Chapter.

2.9.6 Hatchways Closed by Portable Covers in Lower Decks or within Fully Enclosed Superstructures

(a) General

The following scantlings are intended for conventional type covers. Those for covers of special types are to be specially considered.

(b) Steel Covers

The thickness of the plating for steel covers is not to be less than that required for lower decks as obtained from 2.3.1 of this Chapter. A stiffening bar is to be fitted around the edges as required to provide the necessary rigidity to permit the covers being handled without deformation. The effective depth of the framework is normally to be not less than 4% of its unsupported length. The stiffeners, in association with the plating to which they are attached, are to have section modulus, SM, as determined by the following equation:

$SM = 7.8hsl^2$ cm^3

where:

h	=	tween-deck height	m
s	=	spacing of the stiffeners	m
l	=	length of the stiffener	m

(c) Wheel Loading

Where provision is to be made for the operation and stowage of vehicles having rubber tires, the thickness of the hatch cover plating is to be in accordance with 2.3.1(e) of this Chapter.

2.9.7 Hatchways Closed by Covers of Materials Other Than Steel

Hatch covers constructed of materials other than steel will be specially considered.

2.9.8 Small Hatches on the Exposed Fore Deck

(a) Application

This subsection is applicable to craft with length L (as defined in 1.1.2 of this Part) not less than 80 meters.

The requirements of this subsection apply to all small hatches [opening normally 2.5 square meters or less] located on the exposed fore deck within the forward 0.25L, where the deck in way of the hatch is less than 0.1L or 2.2 m above the summer load line, whichever is less.

Hatches designed for emergency escape need not comply with 2.9.8(c)(i), 2.9.8(c)(ii), the third paragraph of 2.9.8(d) and 2.9.8(e) of this Chapter.

(b) Strength

For small rectangular steel hatch covers, the plate thickness, stiffener arrangement and scantlings are to be in accordance with Table III 2-30 and Fig. III 2-50 of this Chapter. Stiffeners, where fitted, are to be aligned with the metal-to-metal contact points as required in 2.9.8(d) of this Chapter. See also Fig. III 2-50 of this Chapter. Primary stiffeners are to be continuous. All stiffeners are to be welded to the inner edge stiffener, see Fig. III 2-51 of this Chapter.

The upper edge of the hatchway coaming is to be suitably reinforced by a horizontal section, normally not more than 170 to 190 mm from the upper edge of the coaming.

For small hatch covers of circular or similar shape, the cover plate thickness and reinforcement is to provide strength and stiffness equivalent to the requirements for small rectangular hatches.

For small hatch covers constructed of materials other than steel, the required scantlings are to provide strength and stiffness equivalent to 235 N/mm^2 yield strength steel.

(c) Primary Securing Devices

The primary securing devices are to be such that their hatch covers can be secured in place and made weathertight by means of a mechanism employing any one of the following methods:

(i) Butterfly nuts tightening onto forks (clamps), or

(ii) Quick acting cleats, or

(iii) A central locking device.

Dogs (twist tightening handles) with wedges are not acceptable.

(d) Requirements for Primary Securing

The hatch cover is to be fitted with a gasket of elastic material. This is to be designed to allow a metal-to-metal contact at a designed compression and to prevent over compression of the gasket by green sea forces that may cause the securing devices to be loosened or dislodged. The metal-to-metal contacts are to be

arranged close to each securing device in accordance with Fig. III 2-50 of this Chapter, and of sufficient capacity to withstand the bearing force.

The primary securing method is to be designed and manufactured such that the designed compression pressure is achieved by one person without the need of any tools.

For a primary securing method using butterfly nuts, the forks (clamps) are to be of robust design. They are to be designed to minimize the risk of butterfly nuts being dislodged while in use; by means of curving the forks upward and a raised surface on the free end, or a similar method. The plate thickness of unstiffened steel forks is not to be less than 16 mm. An example arrangement is shown in Fig. III 2-51 of this Chapter.

For small hatch covers located on the exposed deck forward of the fore-most cargo hatch, the hinges are to be fitted such that the predominant direction of green sea will cause the cover to close, which means that the hinges are normally to be located on the fore edge.

On small hatches located between the main hatches, for example between Nos. 1 and 2, the hinges are to be placed on the fore edge or outboard edge, whichever is practicable for protection from green water in beam sea and bow quartering conditions.

(e) Secondary Securing Devices

Small hatches on the fore deck are to be fitted with an independent secondary securing device e.g., by means of a sliding bolt, a hasp or a backing bar of slack fit, which is capable of keeping the hatch cover in place, even in the event that the primary securing device became loosened or dislodged. It is to be fitted on the side opposite to the hatch cover hinges.

Table III 2-30
Scantlings for Small Steel Hatch Covers on the Fore Deck

Nominal Size (mm×mm)	Cover Plate Thickness (mm)	Primary Stiffeners	Secondary Stiffeners
		Flat Bar (mm×mm); number	
630×630	8	---	---
630×830	8	100×8; 1	---
830×630	8	100×8; 1	---
830×830	8	100×10; 1	---
1030×1030	8	120×12; 1	80×8; 2
1330×1330	8	150×12; 2	100×10; 2

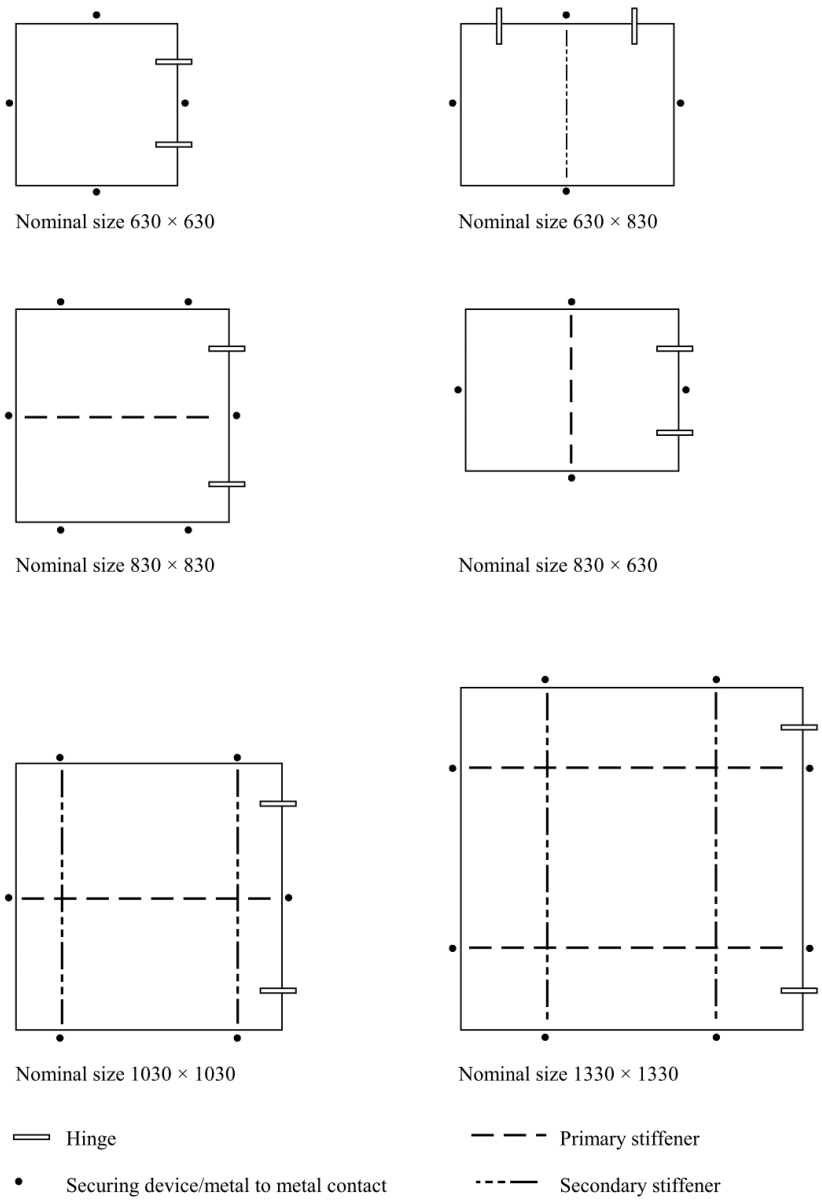

Fig. III 2-50
Arrangement of Stiffeners

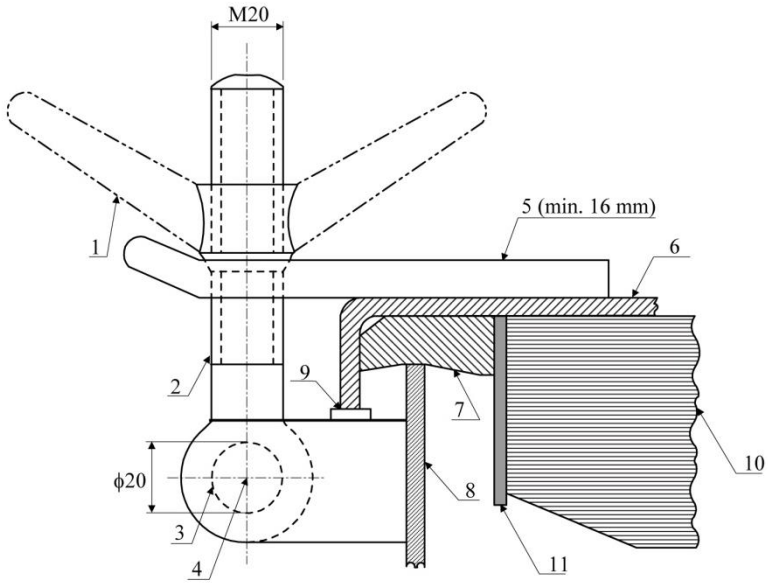

Note: Dimensions in mm

1	butterfly nut	7	gasket
2	bolt	8	hatch coaming
3	pin	9	bearing pad welded on the bracket of a bolt for metal to metal contact
4	center of pin	10	stiffener
5	fork (clamp)plate	11	inner edge stiffener
6	hatch cover		

Fig. III 2-51
Example of Primary Securing Method

2.9.9 Hatchways within Open Superstructures

Hatchways within open superstructures are to be considered as exposed to weather.

2.9.10 Hatchways within Deckhouses

Hatchways within deckhouses are to have coamings and closing arrangements as required in relation to the protection afforded by the deckhouse from the standpoint of its construction and the means provided for the closing of all openings into the house.

2.9.11 Machinery Casings

(a) Arrangement

Machinery-space openings in Position 1 or 2 are to be framed and efficiently enclosed by casings of ample strength, and wherever practicable, those in main decks are to be placed within superstructures or deckhouses. Casings are to be of material similar to that of the surrounding structure. Openings in exposed casings are to be fitted with doors complying with the requirements of 2.9.4(a) of this Chapter; the sills are to be in accordance with 2.9.3(a) of this Chapter for companionways. Other openings in such casings are to be fitted with equivalent covers, permanently attached. Stiffeners are to be spaced at not more than 760 mm.

(b) Scantlings

The scantlings of exposed casings are to be similar to those obtained for superstructures and deckhouses in accordance with the applicable requirements of 2.2, 2.3 and 2.4 of this Chapter.

The scantlings of casings within enclosed superstructures or deckhouses will be specially considered.

2.9.12 Miscellaneous Openings in Freeboard and Superstructure Decks

(a) Manholes and Scuttles

Manholes and flush scuttles in Position 1 or 2 within superstructures other than enclosed superstructures are to be closed by substantial covers capable of being made watertight. Unless secured by closely spaced bolts, the covers are to be permanently attached.

(b) Other Openings

Openings in freeboard decks other than hatchways, machinery-space openings, manholes and flush scuttles are to be protected by an enclosed superstructure, or by a deckhouse or companionway of equivalent strength and weathertightness. Any such opening in an exposed superstructure deck or in the top of a deckhouse on the main deck which gives access to a space below the main deck or a space within an enclosed superstructure is to be protected by an efficient deckhouse or companionway. Doorways in such deckhouses or companionways are to be fitted with doors complying with the requirements given in 2.9.4(a) of this Chapter.

(c) Escape Openings

(i) The closing appliances of escape openings are to be of a type that is operable from each side.

(ii) The maximum force needed to open the closing appliances is not to exceed 150 N.

(iii) The use of a spring equalizing, counterbalance or other suitable device on the hinge side to reduce the force needed for opening is acceptable.

(d) Chain Pipe Opening

For craft with length L (as defined in 1.1.2 of this Part) greater than 24 meters, chain pipes through which anchor cables are led are to be provided with permanently attached closing appliances to minimize ingress of water. A canvas cover with appropriate lashing arrangement will be acceptable* for this purpose. Cement and wire mesh arrangement is not permitted.

The arrangement on craft that are not subject to the International Convention on Load Lines or its Protocol may be specially considered.

*Note:

Examples of acceptable arrangements are such as:

(i) Steel plates with cutouts to accommodate chain links, or

(ii) Canvas hoods with a lashing arrangement that maintains the cover in the secured position.

2.10 Protection of Shell Openings

2.10.1 Cargo, Gangway, or Fueling Ports

(a) Construction

Cargo, gangway, or fueling ports in the sides of craft are to be strongly constructed and capable of being made thoroughly watertight. Where frames are cut in way of such ports, web frames are to be fitted on the sides of the openings, and suitable arrangements are to be provided for the support of the beams over the openings. Thick shell plates or doublers are to be fitted as required to compensate for the openings. The corners of the openings are to be well rounded. Waterway angles and scuppers are to be provided on the decks in way of ports in cargo spaces below the freeboard deck or in cargo spaces within enclosed superstructures to prevent the spread of any leakage water over the decks.

Indicators showing whether the ports in the side shell below the freeboard or superstructure deck are secured closed or open are to be provided on the navigation bridge.

(b) Location

The lower edges of cargo, gangway, or fueling-port openings are not to be below a line parallel to the main deck at side having as its lowest point the designed load waterline or upper edge of the uppermost load line.

2.10.2 Securing, Locking and Supporting of Doors

(a) Definitions

(i) Securing Device

A device used to keep the door closed by preventing it from rotating about its hinges or its pivoted attachments to the craft.

(ii) Supporitng Device

A device used to transmit external or internal loads from the door to a securing device and from the securing device to the craft's structure, or a device other than a securing device, such as a hinge, stopper or other fixed device, that transmits loads from the door to the craft's structure.

(iii) Locking Device

A device that locks a securing device in the closed position.

2.10.3 Securing and Supporting Devices

(a) General

Securing and supporting devices are to be arranged in accordance with this subsection, and are to have scantlings as required by 2.10.6(e), 2.10.7(c) or 2.10.8(e) of this Chapter, as appropriate.

(b) Bow Doors

Means are to be provided to prevent lateral or vertical movement of the bow doors when closed. Means are also to be provided for mechanically fixing the door in the open position.

Means of securing and supporting the door are to maintain equivalent strength and stiffness of the adjacent structure.

(i) Clearance and Packing

The maximum design clearance between the door and securing/supporting devices is not to exceed 3 mm. Where packing is fitted, it is to be of a comparatively soft type and the supporting forces are to be carried by the steel structure only.

(ii) Visor Door Arrangement.

The pivot arrangement is to be such that the visor is self-closing under external loads. The closing moment, M_y, as defined in 2.10.9(c)(i) of this Chapter is not to be less than M_{yo} as given by the following equation:

$$M_{yo} = Wc + 0.1\sqrt{a^2 + b^2}\sqrt{F_x^2 + F_z^2}$$

where W, a, b, c, F_x and F_z are as defined in 2.10.9 of this Chapter

In addition, the arrangement of the door is to be such that the reaction forces of pin or wedge supports at the base of the door does not act in the forward direction when the door is loaded in accordance with 2.10.9(c)(iv) of this Chapter.

(c) Side Shell and Stern Doors

Means are to be provided to prevent lateral or vertical movement of the side shell or stern doors when closed. Means are also to be provided for mechanically fixing the doors in the open position.

Clearance and packing for side shell and stern doors are to be in accordance with 2.10.3(b)(i) of this Chapter.

2.10.4 Securing and Locking Arrangement

(a) General

Securing devices are to be provided with a mechanical locking arrangement (self-locking or separate arrangement), or are to be of the gravity type.

(b) Operation

Securing devices are to be simple to operate and readily accessible. The opening and closing systems as well as the securing and locking devices are to be interlocked in such a way that they can only operate in the proper sequence.

(i) Hydraulic Securing Devices

Where hydraulic securing devices are applied, the system is to be mechanically lockable in the closed position. In the event of a loss of hydraulic fluid, the securing devices are to remain locked.

The hydraulic system for securing and locking devices is to be isolated from other hydraulic circuits when in the closed position.

(ii) Remote Control

Where bow doors and inner doors give access to a vehicle deck, an arrangement for remote control from a position above the freeboard deck is to be provided allowing closing and opening of the doors and associated securing and locking of the securing and locking devices for every door. The operating panels for operation of doors are to be accessible to authorized persons only. A notice plate giving instructions to the effect that all securing devices are to be closed and locked before leaving harbor is to be placed at each operating panel and is to be supplemented by warning indicator lights as indicated in 2.10.4(c)(i) of this Chapter.

(c) Indication/Monitoring

(i) Indicators

The indicator system is to be designed on the fail safe principle and in accordance with the following:

(1) Location and Type
Separate indicator lights are to be provided on the navigation bridge to show that the bow door and inner door are closed and that their locking devices are properly positioned.
The indication panel on the navigation bridge is to be equipped with a mode selection function "harbor/sea voyage", arranged so that an audible and visible alarm is given if in the sea voyage condition, the bow door or inner door is not closed, or any of the securing devices is not in the correct position.
Indication of the open/closed position of every door and every securing and locking device is to be provided at the operating panels.

(2) Indicator lights
Indicator lights are to be designed so that they cannot be manually turned off. The indication panel is to be provided with a lamp test function.

(3) Power Supply
The power supply for the indicator system is to be independent of the power supply for operating and closing the doors.

(4) Protection of Sensors
Sensors are to be protected from water, ice formation and mechanical damage.

(ii) Water Leakage Protection

A drainage system is to be arranged in the area between the bow door and ramp and in the area between the ramp and inner door where fitted. The system is to be equipped with an audible alarm function to the navigation bridge for water level in these areas exceeding 0.5 m above the car deck level.

A water leakage detection system with audible alarm and television surveillance are to be arranged to provide an indication to the navigation bridge and to the engine control room of leakage through the inner door.

(iii) Door Surveillance

Between the bow door and the inner door a television surveillance system is to be fitted with a monitor on the navigation bridge and in the engine control room. The system is to monitor the position of doors and a sufficient number of their securing devices.

2.10.5 Tightness

(a) Bow Doors

Bow doors are to be so fitted as to provide tightness consistent with operational conditions and to give effective protection to the inner doors.

(b) Inner Doors

Inner doors forming part of the extension of the collision bulkhead are to be weathertight over the full height of the cargo space and arranged with fixed sealing supports on the aft side of the doors.

(c) Side Shell and Stern Doors

Side shell doors and stern doors are to be so fitted as to provide watertightness.

2.10.6 Bow Door Scantlings

(a) General

Bow doors are to be framed and stiffened so that the whole structure is equivalent to the unpierced bulkhead when closed.

(b) Primary Structure

Scantlings of primary members are to be designed so that the allowable stresses indicated in 2.10.12(a) of this Chapter are not exceeded when the structure is subjected to the design loads indicated in 2.10.9(a) of this Chapter. Unless the ends of the primary members are effectively fixed-ended, the member is to be considered simply supported.

(c) Secondary Stiffeners

Secondary stiffeners are to be supported by primary members constituting the main stiffening of the door. The section modulus, SM, of secondary stiffeners is to be as required by 2.4.1(b) of this Chapter. In addition, stiffener webs are to have a net sectional area not less than that obtained from the following equation:

$$A = VQ/10 \qquad cm^2$$

where:

V = shear force, in the stiffener calculated using the uniformly distributed external pressure P_{eb} as given in 2.10.9(a) of this Chapter kN

Q = as defined in 2.1.1(a)(i) of this Chapter

(d) Plating

The thickness of bow door plating is to be not less than that required for side shell plating at the same location.

(e) Securing and Supporting Devices

Scantlings of securing and supporting devices are to be designed so that the allowable stresses indicated in 2.10.12(a) of this Chapter are not exceeded when the structure is subjected to the design loads indicated in 2.10.9(b) of this Chapter. All load transmitting elements in the design load path from the door through securing and supporting devices into the craft structure, including welded connections, are to meet the strength standards required for securing and supporting devices. Where fitted, threaded bolts are not to carry

support forces, and the maximum tensile stress in way of the threads is not to exceed the allowable stress given in 3-2.10.12(c) of this Chapter.

In determining the required scantlings, the door is to be assumed to be a rigid body. Only those active supporting and securing devices having an effective stiffness in the relevant direction are to be included and considered when calculating the reaction forces on the devices. Small or flexible devices such as cleats intended to provide load compression of the packing material are not to be included in the calculations.

(i) Bearing Pressure

The bearing pressure on steel to steel bearings is to be calculated by dividing the design force by the projected bearing area, and is not to exceed the allowable stress as given in 2.10.12(b) of this Chapter.

(ii) Redundancy

In addition to the above requirements, the arrangement of the securing and supporting devices is to be designed with redundancy such that in the event of failure of any single securing or supporting device, the stresses in the remaining devices do not exceed the allowable stresses as indicated in 2.10.12(a) of this Chapter by more than 20% under the above loads.

(iii) Visor Door Securing and Supporting Devices

Securing and supporting devices, excluding the hinges, are to be capable of resisting the vertical design force given in 2.10.9(c)(iii) of this Chapter without stresses exceeding the allowable stresses in 2.10.12(a) of this Chapter.

Two securing devices are to be provided at the lower part of the door, each capable of providing the full reaction force required to prevent opening of the door without stresses exceeding the allowable stresses indicated in 2.10.12(a) of this Chapter. The opening moment, M_o, to be balanced by this force is as given in 2.10.9(c)(ii) of this Chapter.

(iv) Side-opening Door Thrust Bearing

A thrust bearing is to be provided in way of girder ends at the closing of the two doors, and is to prevent one door from shifting towards the other one under the effect of unsymmetrical pressure. Securing devices are to be fitted to secure sections thrust bearing to one another.

(f) Visor Door Lifting Arms and Supports

Where visor type bow doors are fitted, calculations are to be submitted verifying that lifting arms and their connections to the door and craft structure are adequate to withstand the static and dynamic forces applied during the lifting and lowering operations under a wind pressure of at least 1.5 kN/m^2.

2.10.7 Inner Door Scantlings

(a) General

Scantlings of inner doors are to meet the requirements of this subsection. In addition, where inner doors are used as vehicle ramps, scantlings are not to be less than required for vehicle decks.

(b) Primary Structure

Scantlings of primary members are to be designed so that the allowable stresses indicated in 2.10.12(a) of this Chapter are not exceeded when the structure is subjected to the design loads indicated in 2.10.10(a) of this Chapter.

(c) Securing and Supporting Devices

Scantlings of securing and supporting devices are to be designed so that the allowable stresses indicated in 2.10.12(a) of this Chapter are not exceeded when the structure is subjected to the design loads indicated in 2.10.10 of this Chapter. Where fitted, threaded bolts are not to carry support forces, and the maximum tensile stress in way of the threads is not to exceed the allowable stress as given in 2.10.12(b) of this Chapter.

The bearing pressure on steel to steel bearings is to be calculated by dividing the design force by the projected bearing area, and is not to exceed the allowable stress given in 2.10.12(b) of this Chapter.

2.10.8 Side Shell Door and Stern Door Scantlings

(a) General

Scantlings of side shell doors or stern doors are to meet the requirements of this subsection. The doors are to be framed and stiffened so that the whole structure is equivalent to the intact side or stern structure when closed. In addition, where the doors are used as vehicle ramps, scantlings are not to be less than required for vehicle decks in 2.3 and 2.4 of this Chapter.

(b) Primary Structure

Scantlings of primary members are to be designed so that the allowable stresses indicated in 2.10.12(a) are not exceeded when the structure is subjected to the design loads indicated in 2.10.11. The primary members are to be considered simply supported at their support points unless the end connections are effectively restrained.

(c) Secondary Stiffeners

Secondary stiffeners are to be supported by primary members constituting the main stiffening of the door. The section modulus, SM, of secondary stiffeners is to be not less than required by 2.4 of this Chapter for frames in the same location. In addition, the net sectional area of stiffener webs is to be in accordance with 2.10.6(c), using the external pressure, p_e, given in 2.10.11.

(d) Plating

The thickness of side or stern door plating is to be not less than that required for side shell plating at the same location.

(e) Securing and Supporting Devices

Scantlings of securing and supporting devices are to be designed so that the allowable stresses indicated in 2.10.12(a) of this Chapter are not exceeded when the structure is subjected to the design loads indicated in 2.10.11 of this Chapter. All load-transmitting elements in the design load path from the door through securing and supporting devices into the craft structure, including welded connections, are to meet the strength standards required for securing and supporting devices. Where fitted, threaded bolts are not to carry support forces, and the maximum tensile stress in way of the threads is not to exceed the allowable stress given in 2.10.12(c) of this Chapter.

In determining the required scantlings, the door is to be assumed to be a rigid body. Only those active supporting and securing devices having an effective stiffness in the relevant direction are to be included and considered when calculating the reaction forces on the devices. Small or flexible devices such as cleats intended to provide compression load on the packing material are not to be included in the calculations.

(i) Bearing Pressure

The bearing pressure on steel to steel bearings is to be calculated by dividing the design force by the projected bearing area, and is not to exceed the allowable stress given in 2.10.12(b) of this Chapter.

(ii) Redundancy

In addition to the above requirements, the arrangement of the securing and supporting devices is to be designed with redundancy such that in the event of a failure of any single securing or supporting device, the stresses in the remaining devices do not exceed the allowable stresses indicated in 2.10.12(a) of this Chapter by more than 20% under the above loads.

2.10.9 Bow Door Design Loads

(a) External Pressure

The design external pressure, P_{eb}, is to be taken as indicated by the following equation.

$$P_{eb} = 2.75c(0.22 + 0.15tan\beta)(0.4V_d sin\alpha + 0.6\sqrt{L})^2 \qquad \text{kN/m}^2$$

where:

c	=	0.0125L	L < 80 m for craft having L < 80 m
	=	1.0	for other craft
L	=	length of craft as defined in 1.1.2 of this Part	m
β	=	flare angle at the point to be considered, defined as the angle between a vertical line and the tangent to the side shell plating measured in a vertical plane normal to the horizontal tangent to the shell plating. See Fig. III 2-52 of this Chapter.	
α	=	entry angle at the point to be considered, defined as the angle between a longitudinal line parallel to the centerline and the tangent to the shell plating in a horizontal plane. See Fig. Fig. III 2-52 of this Chapter.	
V_d	=	craft design speed as defined in 2.8.2(a) of this Chapter.	

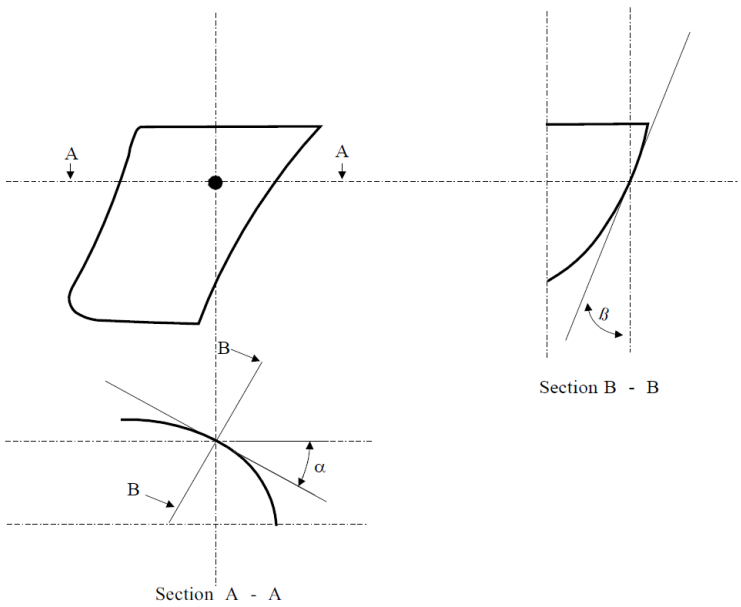

Fig. III 2-52
Entry and Flare Angles

(b) External Forces

The design external forces considered in determining scantlings of securing and supporting devices of bow doors are not to be taken less than those given by the following equations:

$$F_x = P_{em} A_x$$
$$F_y = P_{em} A_y$$
$$F_z = P_{em} A_z$$

where:

F_x	=	design external force in the longitudinal direction	kN
F_y	=	design external force in the horizontal direction	kN
F_z	=	design external force in the vertical direction	kN
A_x	=	area, of the transverse vertical projection of the door between the levels of the bottom of the door and the upper deck or between the bottom of the door and the top of the door,	

whichever is less m^2

A_y = area, of the longitudinal vertical projection of the door between the levels of the bottom of the door and the upper deck or between the bottom of the door and the top of the door, whichever is less m^2

A_z = area, of the horizontal projection of the door between the levels of the bottom of the door and the upper deck or between the bottom of the door and the top of the door, whichever is less m^2

P_{em} = bow door pressure, P_{eb}, determined using α_m and β_m in place of α and β

β_m = flare angle measured at a point on the bow door *l*/2 aft of the stem line on a plane h/2 above the bottom of the door, as shown in Fig. III 2-53 of this Chapter

α_m = entry angle measured at the same point as β_m. See Fig. III 2-53 of this Chapter.

h = height, of the door between the levels of the bottom of the door and the upper deck or between the bottom of the door and the top of the door, whichever is less m

l = length, of the door at a height of h/2 above the bottom of the door m

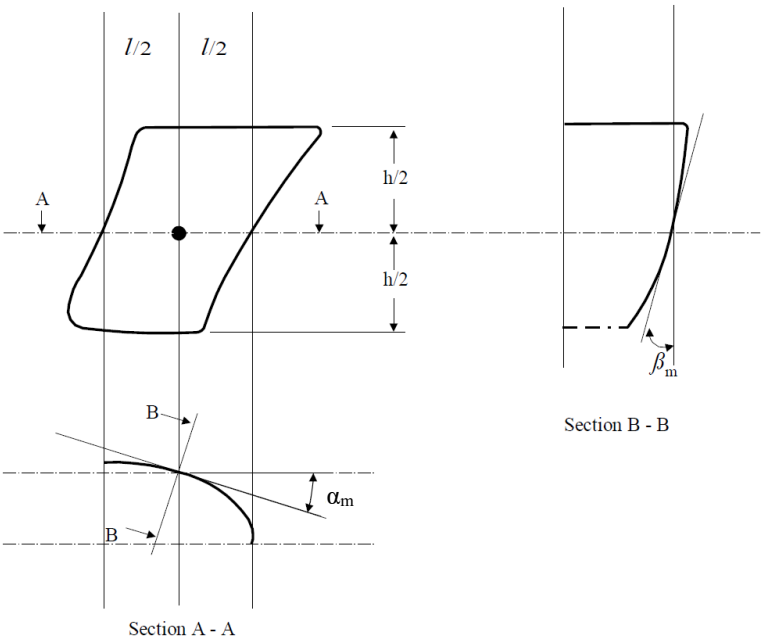

Fig. III 2-53
Definition of α_m and β_m

(c) Visor Door Forces, Moments and Load Cases

(i) Closing Moment

For visor doors, the closing moment, My, is to be taken as indicated by the following equation:

$$M_y = F_x a + Wc - F_z b \qquad \text{kN-m}$$

where:

W = weight of the visor door kN

a = vertical distance, from the visor pivot to the centroid of the transverse vertical projected area of the visor door. See Fig. III 2-54 of this Chapter m

b = horizontal distance, from visor pivot to the centroid of the horizontal projected area of the visor door. See III 2-54 of this Chapter m

c = horizontal distance, from the visor pivot to the center of gravity of the visor door. See Fig. III 2-54 of this Chapter m

F_x and F_z are as defined in 2.10.9(b) of this Chapter.

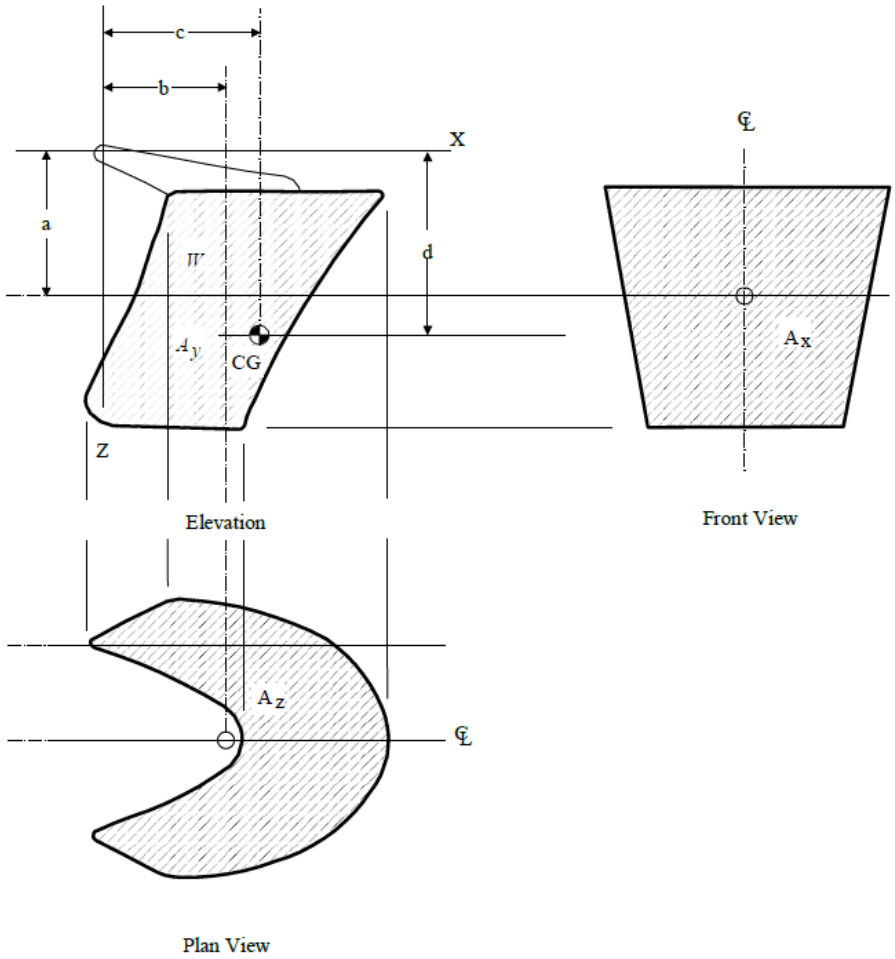

Fig. III 2-54
Visor Type Bow Door

(ii) Opening Moment

The opening moment, M_o, is to be taken as indicated by the following equation:

$$M_o = Wd + 5A_x a \qquad \text{kN-m}$$

where:

d = vertical distance, from the hinge axis to the center of gravity of the door m

W, A_x and a are as indicated above.

(iii) Vertical Design Force

The vertical design force is to be taken as $F_z - W$, where F_z is as defined in 2.10.9(b) and W is as defined in 2.10.9(c)(i).

(iv) Combined Load Case 1

The visor doors are to be evaluated under a load of F_x, F_z and W acting simultaneously with F_x and F_z acting at the centroid of their respective projected areas.

(v) Combined Load Case 2

The visor doors are to be evaluated under a load of $0.7F_y$ acting on each side separately together with $0.7F_x$, $0.7F_z$ and W. F_x, F_y and F_z are to be taken as acting at the centroid of their respective projected areas.

(d) Side-Opening Door Load Cases

(i) Combined Load Case 1

Side opening doors are to be evaluated under a load of F_x, F_y, F_z and W acting simultaneously with F_x, F_y and F_z acting at the centroid of their respective projected areas.

(ii) Combined Load Case 2

Side opening doors are to be evaluated under a load of $0.7F_x$, $0.7F_z$ and W acting on both doors simultaneously and $0.7F_y$ acting on each door separately.

2.10.10 Inner Door Design Loads

(a) External Pressure

The design external pressure is to be taken as the greater of P_{ei} or P_h as given by the following equations:

$P_{ei} = 0.45L$ kN/m^2

$P_h = 10h$ kN/m^2

where:

L = as defined in 1.1.2 of this Part.

h = the distance, from the load point to the top of the cargo space m

(b) Internal Pressure

The design internal pressure, P_i, is to be taken as not less than 25 kN/m^2.

2.10.11 Side Shell and Stern Doors Design Loads

(a) Design Forces for Primary Members

The design force, in kN, for primary members is to be the greater of the following:

External force: $F_e = Ap_e$

Internal force: $F_i = F_o + W$

(b) Design Forces for Securing or Supporting Devices of Doors Opening Inwards

The design force, in kN, for securing or supporting devices of doors opening inwards is to be the greater of the following:

External force: $F_e = Ap_e + F_p$

Internal force: $F_i = F_o + W$

(c) Design Forces for Securing or Supporting Devices of Doors Opening Outwards

The design force, in kN, for securing or supporting devices of doors opening outwards is to be the greater of the following:

External force: $F_e = Ap_e$

Internal force: $F_i = F_o + W + F_p$

where:

A	=	area, of the door opening m^2	
W	=	weight of the door kN	
F_p	=	total packing force, Packing line pressure is normally not to be taken less than 5.0 N/mm	kN
F_o	=	the greater of F_c and 5A	kN
F_c	=	accidental force, due to loose cargo, etc., to be uniformly distributed over the area A and not to be taken less than 300 kN. For small doors such as bunker doors and pilot doors, the value of F_c may be appropriately reduced. However, the value of F_c may be taken as zero provided an additional structure such as an inner ramp is fitted which is capable of protecting the door from accidental forces due to loose cargoes. kN	
p_e	=	external design pressure, determined at the center of gravity of the door opening and not taken less than:	kN/m^2
			kN/m^2
		$p_e = 25$ for $Z_G \geq d$	
		$p_e = 10\,(d - Z_G) + 25$ for $Z_G < d$	
		Moreover, for craft fitted with bow doors, p_e for stern doors is not to be taken less than:	
		$p_e = 0.605c(0.8 + 0.6\sqrt{L})^2$	
		For craft fitted with bow doors and operating in restricted service, the value of p_e for stern doors will be specially considered.	
d	=	draft, as defined in 1.1.6 of this Part m	
Z_G	=	height of the center of area of the door, above the baseline m	
c	=	0.0125L for L < 80 m	
	=	1 for L ≥ 80 m	
L	=	length of craft, as defined in 1.1.2 of this Part, but need not be taken as greater than 200 m	m

2.10.12 Allowable Stresses

(a) Primary Structure and Securing and Supporting Devices

The following stresses are not to be exceeded under the loads indicated above:

Shear Stress: $\tau = 80/Q$ N/mm^2

Bending Stress: $\tau = 120/Q$ N/mm^2

Equivalent Stresses $(\sqrt{\sigma^2 + 3\tau^2})$: $\sigma_e = 150/Q$ N/mm^2

where Q is as defined in 2.1.1(a)(i) of this Chapter.

(b) Steel Securing and Supporting Devices Bearing Stress

For steel to steel bearings in securing and supporting devices, the nominal bearing pressure is not to exceed $0.8\sigma_f$, where σ_f is the yield stress of the bearing material.

(c) Tensile Stress on Threaded Bolts

The tensile stress in threaded bolts is not to exceed 125/Q N/mm^2.

2.10.13 Operating and Maintenance Manual

The following information is to be submitted for review:

(a) Manual

An operating and maintenance manual for the bow door and inner door is to be provided on board and is to contain at least the following:

(i) Main particulars and design drawings

(ii) Service conditions (e.g., service area)

(iii) Restrictions, acceptable clearances for supports

(iv) Maintenance and function testing

(v) Register of inspections and repairs

(b) Operating Procedures

Documented operating procedures for closing and securing the bow door and inner door are to be kept on board and posted at an appropriate location.

2.11 Bulwarks, Rails, Ports, Portlights, Windows, Ventilators, Tank Vents and Overflows

2.11.1 Bulwarks and Guard Rails

Bulwarks or guard rails or a combination of both, are in general to be provided on periphery of exposed decks, and on exposed tops of superstructures and deckhouses.

Where the flag administration has specific requirements for bulwarks and guardrails they may be accepted provided they are not less effective.

For vessels less than 24 meters in length, may be special considered.

(a) Location and Heights

Bulwarks or guardrails are also to be provided on the exposed side of any platform surface that is greater than 600 mm or higher above the adjacent surface.

The height of bulwarks and guard rails on exposed freeboard and superstructure decks, at the boundary of first tier deckhouses and at the ends of superstructures is to be at least 1 m. Where this height would interfere with the normal service or operation of a craft, a lesser height may be approved if adequate protection is provided. Where approval of a lesser height is requested, justifying information is to be submitted, such as arrangements provided to prevent personnel going over the guard rails or bulwarks.

(b) Strength of Bulwarks

Bulwarks are to be of ample strength for their height and location, suitably stiffened at the top, and if necessary at the bottom, and supported by efficient stays or brackets.

Stays or brackets on the main weather deck are to be spaced not more than 1.83 m.

Openings in bulwarks are to be smooth-edged, with well-rounded corners.

(c) Guard Rails

(i) Fixed, removable or hinged stanchions are to be fitted at approximately 1.5 m apart. Removable or hinged stanchions are to be capable of being locked in the upright position.

(ii) At least every third stanchion is to be supported by a bracket or stay. Dimensions and arrangement of stanchion and stays are to be as shown in Fig. III 2-55 of this Chapter. Where this arrangement would interfere with the safe traffic of persons on board, the following alternative arrangements of stanchions may be acceptable:

(1) At least every third stanchion is to be of increased breadth, $kb_s = 2.9b_s$ at the attachment of stanchion to the deck, or,

(2) At least every second stanchion is to be of increased breadth, $kb_s = 2.4b_s$ at the attachment of stanchion to the deck, or,

(3) Every stanchion is to be of increased breadth, $kb_s = 1.9b_s$ at the attachment of stanchion to the deck.

where, b_s is not to be taken as less than 60 mm (see Fig. III 2-56 of this Chapter). The thickness of the flat bar stanchions is not to be less than 15 mm.

For any of the above arrangements (1), (3) or (3), the following details are to be complied with:

(4) Flat steel stanchion required by (1), (2) or (3) above is to be aligned with supporting member below the deck unless the deck plating thickness exceeds 20 mm and welded to deck with double continuous fillet weld with minimum leg size of 7.0 mm or as specified by the design standard.

(5) The underdeck supporting member of the stanchion is to be a minimum of 100 × 12 mm flat bar welded to deck by double continuous fillet weld.

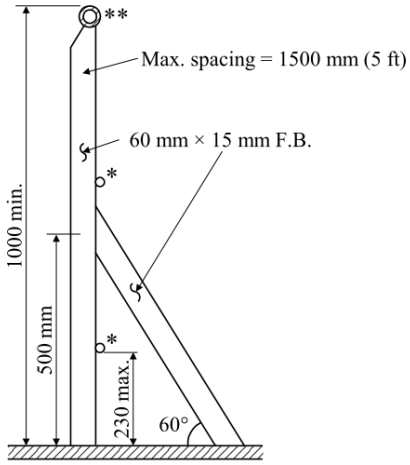

Standard stanchion, rail, and stay sizes.
(Stay to be provided at every third stanchion)

* = 20 mm solid round bar or 26.9 mm outside diameter pipe with 2.3 mm minimum wall thickness (or pipes having an equivalent section modulus)

** Top Rail = 42.4 mm outside diameter pipe with 2.6 mm minimum wall thickness (or pipes having an equivalent section modulus)

Fig. III 2-55
Guardrail Stanchion

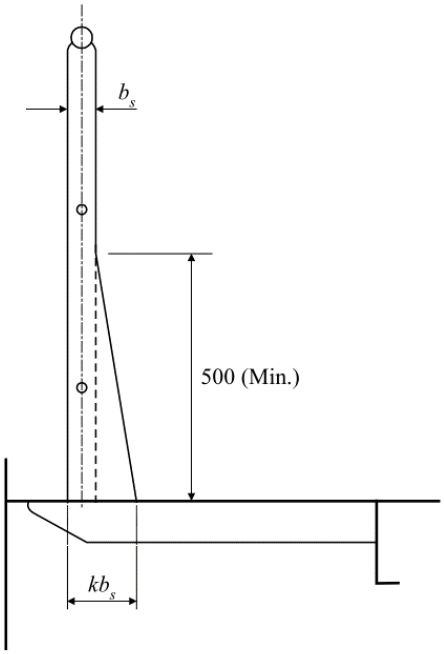

Fig. III 2-56
Guardrail Stanchion

(iii) The clear opening below the lowest course is not to exceed 230 mm. Where a foot-stop is installed at the deck level the clear opening below the lowest course may be measured from the top of the foot-stop. The clear distances between the lowest and the middle courses, as well as the middle and the upper courses are not to exceed 380 mm.

The distance between the lower rail and the top of the sheerstrake is not to exceed 230 mm.

(iv) For vessels with rounded gunwales, stanchions are to be placed on the flat of the deck.

(d) Guard Rail Scantling Correction

When aluminum guard rails are used, calculate an equivalent section modulus to the standard shown in Fig. III 2-55 of this Chapter, using the below formula.

$$SM_{al} = 0.9Q_0SM_s$$

where:

SM_{al} = minimum section modulus of aluminum guardrail
SM_s = offered section modulus of guardrail as shown in Fig. III 2-55 of this Chapter
Q = material factor, as determined from 2.11.1(d)(i) of this Chapter
Q_0 = material factor, as determined from 2.11.1(d)(i) of this Chapter

(i) Material Factors

The material factor, Q, is obtained from the following equation:

$$Q = 0.9 + (120/Y_{al})$$

but is not to be taken as less than Q_0 below.

The material factor, Q_0, is obtained from the following equation:

$$Q_0 = 635/(\sigma_y + \sigma_u)$$

where

Y_{al}	=	minimum yield strength of the welded aluminum alloy under consideration at 2% offset in a 254 mm gauge length, in accordance with the requirements of the table below	N/mm^2
σ_u	=	minimum ultimate strength of the welded aluminum alloy under consideration, in accordance with the table below	N/mm^2
σ_y	=	minimum yield strength of the welded aluminum alloy under consideration, in accordance with the table below	N/mm^2

(e) Life Lines

Life lines, where fitted, are to be a minimum of 9.5 mm in diameter, 7×19 construction, and made of stainless steel wire rope. They are to have a stainless steel turnbuckle at one end and a stainless steel screw pin shackle at the other.

2.11.2 Freeing Ports

(a) Basic Area for Craft More Than 24 meters in Length

Where bulwarks on freeboard decks form wells, ample provision is to be made for rapidly freeing the decks of water and for draining them. The minimum freeing-port area on each side of the craft for each well 20 m or less in length is to be obtained from the following equation:

$$A = 0.7 + 0.035l \qquad m^2$$

Where the bulwark length exceeds 20 m:

$$A = 0.07l \qquad m^2$$

where:

A	=	freeing-port, area in m^2
l	=	bulwark length, in m, but need not exceed 0.7L

The minimum area for each well on superstructure decks is to be one half of the area obtained from the above equations.

If a bulwark is more than 1.2 m in height, the freeing-port area is to be increased by 0.004 m^2 per meter of length of well for each 0.1 m difference in height. If a bulwark is less than 0.9 m in height, the freeing-port area may be decreased by the same ratio. Where sheer is less than standard, the percentage is to be obtained by interpolation.

(b) Basic Area for Craft Less Than 24 meters in Length

Freeing ports may comply with the requirements of a recognized standard acceptable to CR in lieu of the requirements stated in 2.11.2(a) of this Chapter.

(c) Trunks, Deckhouses and Hatchway Coamings

Where a craft is fitted with a trunk on the freeboard deck, and open rails are not fitted in way of the trunk for at least one-half its length, or where continuous or substantially continuous hatchway side coamings are fitted or long deckhouse exist between detached superstructures, the minimum area of freeing-port openings is to be obtained from the following table:

Breadth of Trunk, Deckhouse or Hatchway in Relation to Breadth of Craft	Area of Freeing Ports in Relation to Total Area of Bulwarks
40% or less	20%
75% or more	10%

The area of freeing ports at intermediate breadths is to be obtained by linear interpolation.

(d) Superstructure Decks

Where bulwarks on superstructure decks form wells, the bulwarks are to comply with 2.11.2(a) of this Chapter except that the minimum freeing-port area on each side of the craft for each well is to be one-half of the area obtained in 2.11.2(a) and 2.11.2(b) of this Chapter.

(e) Open Superstructures

In craft having superstructures that are open at either end or both ends, adequate provisions for freeing the spaces within such superstructures are to be provided; the arrangements will be subject to special approval.

(f) Details of Freeing Ports

The lower edges of freeing ports are to be as near the deck as practicable. Two-thirds of the freeing port area required is to be provided in the half of the well nearest the lowest point of the sheer curve. One third of the freeing port area required is to be evenly spread along the remaining length of the well. With zero or little sheer on the exposed freeboard deck or an exposed superstructure deck the freeing port area is to be evenly spread along the length of the well.

All freeing port openings in the bulwarks are to be protected by rails or bars spaced approximately 230 mm apart. If shutters are fitted to freeing ports, ample clearance is to be provided to prevent jamming. Hinges are to have pins or bearings of non-corrodible material. Shutters are not to be fitted with securing appliances.

2.11.3 Portlights

(a) Location

No portlight is to be fitted in a position with its sill below a line drawn parallel to the freeboard deck at side and having its lowest point less than 2.5% of the craft breadth above the maximum load waterline or 500 mm, whichever is greater. In addition, portlights are not to be fitted in spaces which are used for the carriage of cargo.

(b) Construction

Portlights fitted below the main weather deck or in superstructure and house side plating are to be of substantial construction and provided with steel, aluminum or other approved material inside deadlights, permanently attached and arranged to be capable of being closed and secured watertight. Except in way of the machinery space, portlights may be of the hinged opening type, with hinge pins of noncorrosive material. Where vessels are subject to damaged stability requirements of 3.1.2(b) of this Part, portlights found to be situated below a final damage equilibrium waterline are to be of the non-opening type. Portlight frames are to be of steel or other approved material and are to be attached to the hull by through bolts or equivalent. Lower edges of portlights are not to be below a line parallel to the main weather deck at side having its lowest point at a distance above the design waterline either 2.5% of the craft breadth or 500 mm whichever is greater.

For craft limited in service range and weather conditions and not receiving a Load Line Certificate, consideration will be given to the omission of deadlights depending on the type and thickness of the portlight.

The thickness of portlights of tempered or toughened monolithic safety glass is to be not less than given in Table III 2-31 of this Chapter. Consideration will also be given to laminated glass, acrylic and polycarbonate glazing materials based upon equivalent flexural strength and stiffness. See Table III 2-33 of this Chapter for glazing mechanical properties.

In addition to the above, where the craft is assigned a load line in accordance with the International Convention on Load Lines, 1966 (as amended), portlights and deadlights are to meet the requirements of Regulation 23 of the Convention.

(c) Testing

All portlights are to be hose tested in position under a water pressure of at least 2 bar.

The flexural strength of the glass is to be verified by compliance with the proof load in ISO 614.

Table III 2-31
Thickness of Tempered or Toughened Monolithic Glass Portlights

Location	Rounded Portlights		Rectangular Portlights	
	General	Limited Service Craft	General	Limited Service Craft
Side Shell below main weather deck	0.050d	0.040d	$0.091s\sqrt{k}$	$0.073s\sqrt{k}$
Superstructure or deckhouse on main weather deck	0.033d	0.033d	$0.060s\sqrt{k}$	$0.060s\sqrt{k}$
Deckhouse above main weather deck	0.025d	0.025d	$0.045s\sqrt{k}$	$0.045s\sqrt{k}$

Notes:

(1) d is taken as the diameter between inner edges of the portlight frame in mm.

(2) For calculations of required thickness on limited service craft, d is not to be taken less than 250 mm.

(3) k is to be taken from Table III 2-32 of this Chapter; s is the short panel dimension and l is the long window dimension.

2.11.4 Windows

(a) Construction

Windows are defined as being rectangular openings generally, or oval, openings with an area exceeding 0.16 m^2.

Windows to spaces within enclosed superstructure and deckhouses are to be fitted with strong steel, aluminum or other approved material, storm shutters. Windows are not to be fitted below the freeboard deck. Windows are not to be fitted in the first tier end bulkheads or sides of enclosed superstructures. Windows are not to be fitted in first tier deckhouses considered buoyant in the stability calculations or protecting openings leading below. Window frames are to be of steel or other approved material and are to be attached by through bolts or equivalent.

Windows on the second tier above the freeboard deck may not require deadlights depending upon the arrangement of the craft. Window frames are to be metal or other approval material, and effectively secured to the adjacent structure. Windows are to have a minimum of a 1/4 inch radius at all corners. The glazing is to be set into the frames in a suitable, approved packing or compound. Special consideration to be given to angled house fronts.

For externally fitted storm covers an arrangement for safe and easy access is to be provided.

For craft limited in service range and weather conditions and not receiving a Load Line Certificate, consideration will be given to the omission of deadlights depending on the location, type and thickness of the windows.

In addition to the above, where the craft is assigned a load line in accordance with the International Convention on Load Lines, 1966 (as amended), windows and storm shutters are to meet the requirements of Regulation 23 of the Convention.

The thickness of the window is not to be less than that obtained from 2.11.4(a)(i), 2.11.4(a)(ii) or 2.11.4(a)(iii) below, whichever is greater.

(i)

$$t = s\left(\sqrt{\frac{pk}{1000\sigma_a}}\right) \qquad \text{mm}$$

(ii)

$$t = s\left(\sqrt[3]{\frac{pk_1}{20E}}\right) \qquad \text{mm}$$

(iii) Minimum Tempered Monolithic Glass Thicknesses:

t = 9.5 mm for front windows

t = 6.5 mm for side and end windows

where

t	=	required window thickness, in mm (in.)
s	=	lesser dimension of window, in mm (in.)
p	=	pressure head for window location as determined by 2.2.4
k	=	factor given in Table III 2-32 of this Chapter
k_1	=	factor given in Table III 2-32 of this Chapter
σ_a	=	$0.30\sigma_f$
σ_f	=	material flexural strength; see Table III 2-33 of this Chapter
E	=	material flexural modulus; see Table III 2-33 of this Chapter

Table III 2-32

l/s	k	k_1
>5	0.750	0.142
5	0.748	0.142
4	0.741	0.140
3	0.713	0.134
2	0.610	0.111
1.8	0.569	0.102
1.6	0.517	0.091
1.4	0.435	0.077
1.2	0.376	0.062
1	0.287	0.044

Note: *s* = lesser dimension of window panel, in mm
l = greater dimension of window panel, in mm

Intermediate values may be determined by linear interpolation.

Table III 2-33

Glazing	Flexural Strength	Flexural Modulus
Tempered Monolithic	119 MPa	73,000 MPa
Laminated Glass	69 MPa	2,620 MPa
Polycarbonate*	93 MPa	2,345 MPa
Acrylic (PMMA)*	110 MPa	3,000 MPa

* Special considerations will be made with regards to design, manufacture and testing of glass specimens.

(b) Testing

All windows are to be hose tested in position under a water pressure of at least 2 bar.

The flexural strength of the glass is to be verified by compliance with the proof load in ISO 614.

2.11.5 Ventilators, Tank Vents and Overflows

(a) General

Ventilators are to comply with the requirements of 2.11.5(b) below. Tank vents and overflows are to comply with the requirements in 2.11.5(c) below. In addition, for those located on the fore deck of craft with length L (as defined in 1.1.2 of this Part) not less than 80 meters, the requirements given in 2.11.5(d) below are to be complied with.

(b) Ventilators

(i) Coaming Construction

Ventilators on exposed freeboard decks, superstructure decks, or deckhouses are to have coamings of steel or equivalent material. Coaming plate thicknesses for steel are to be obtained from the following equation:

$$t = 0.01\mathrm{d} + 5.5 \qquad \text{mm}$$

where:

t = thickness of coaming, in mm

d = diameter of ventilator, in mm, but not less than 200 mm

The maximum steel coaming plate thickness required is 10 mm. The coamings are to be effectively secured to the deck. Coamings which are more than 900 mm high and which are not supported by adjacent structures are to have additional strength and attachment. Ventilators passing through superstructures other than enclosed superstructures are to have substantially constructed coamings of steel or equivalent material at the freeboard deck. Where a fire damper is located within a ventilation coaming, an inspection port or opening at least 150 mm in diameter is to be provided in the coaming to facilitate survey of the damper without disassembling the coaming or the ventilator. The closure provided for the inspection port or opening is to maintain the watertight integrity of the coaming and, if appropriate, the fire integrity of the coaming.

Coaming plate thickness of material other than steel will be specially considered.

(ii) Coaming Height

Ventilators in Position 1 are to have coamings at least 900 mm high. Ventilators in Position 2 are to have coamings at least 760 mm high. For definitions of Position 1 and Position 2, see 2.9.2 of this Chapter.

(iii) Means for Closing Ventilators

Except as provided below, ventilator openings are to be provided with efficient, permanently attached closing appliances. In craft measuring 24 m or more in length (as defined in the International Convention on Load Lines, 1966), ventilators in Position 1, the coamings of which extend to more than 4.5 m above the deck and in Position 2, the coamings of which extend to more than 2.3 m above the deck, need not be fitted with closing arrangements.

These coaming height requirements may be modified in craft measuring less than 24 m in length.

(c) Tank Vents and Overflows

Tank vents and overflows are to be in accordance with the following requirements and, where applicable, the requirements given below in 2.11.5(d) of this Chapter.

(i) Vent Pipes

Except for comparatively small compartments that are not fitted with a fixed means of drainage, vent pipes are to be fitted to all tanks, cofferdams, voids, tunnels and compartments which are not fitted with other ventilation arrangements. In all craft, the structural arrangement in double- bottom and other tanks

is to be such as to permit the free passage of air and gases from all parts of the tanks to the vent pipes. Each tank is to be fitted with at least one vent pipe which is to be located at the highest part of the tank. Vent pipes are to be arranged to provide adequate drainage under normal conditions. No shutoff valve or closing device that can prevent the venting from a tank is to be installed in vent piping.

(ii) Overflow Pipes

(1) General Requirements

Overflow pipes discharging through the craft's side are to be located as far above the deepest load line as practicable and are to be provided with nonreturn valves located on the craft's side. Where the overflow does not extend above the freeboard deck, there is to be provided, in addition, an efficient and accessible means for preventing water from passing inboard. Such means may consist of another nonreturn valve located in an accessible position above the deepest load line. Where it is impracticable to locate the inner valve in an accessible position, one nonreturn valve with positive means for closing from an accessible position above the freeboard or bulkhead deck will be acceptable, provided there are suitable arrangements to insure the valve not being closed by unauthorized persons and provided a notice is posted in a conspicuous place at the operating station to the effect that the valve is never to be closed, except as may be required in an emergency.

(2) Overflows from Combustible and Flammable Liquid Tanks

Overflow pipes from combustible and flammable liquid tanks are to be led to an overflow tank or to a storage tank with sufficient excess capacity (normally 5 minutes at transfer pump capacity) to accommodate the overflow. An alarm device is to be provided to give warning when the liquid reaches a predetermined level in the overflow tank. If a sight flow glass is also provided in the overflow pipe, then such sight glasses are to be fitted only in vertical sections of overflow pipes and be in readily visible positions.

For craft in which the overflow of fluid from tanks containing combustible and flammable liquids is accomplished via overflow through the tanks vent, there is to spill containment provided at the outlet of the vent with a minimum capacity of 1 / 2 barrel (0.079 m^3, 21 gal.) for each vent.

(3) Overflow Common Header

Where overflows from the tanks in more than one watertight subdivision are connected to a common header below the freeboard or bulkhead deck, the arrangement is to be such as to prevent fore-and-aft flooding of one watertight bulkhead subdivision from another in the event of damage.

(4) Fuel Oil Overflow (2018)

Where a common vent/overflow header is provided for fuel oil storage and day tanks, the vent/overflow header need not be fitted with a separate vent pipe leading directly to atmosphere. The individual tanks and the common vent/overflow header may be vented through the overflow tank vent line to atmosphere, provided the common vent/overflow header arrangement has the following features/conditions:

a) Each vent/overflow line from the tank to the common header, the vent/overflow common headers and the vent line from the overflow tank to the atmosphere are to be sized in order to provide a venting area of at least 125% of the effective fill line area of the shore filling line or onboard transfer line, whichever is greater. Fuel oil tank scantlings are to consider the height of the overflow tank vent.

b) Each storage tank is to be fitted with a high level alarm and a high-high level alarm. Both level alarms are to provide visual and audible indication of the alarm condition at a manned station (such as wheel house, engine control room or an equivalent station) from where filling/transfer operation is controlled.

c) The drop lines from the common headers to the overflow tank are to terminate above the maximum liquid level in the overflow tank (i.e., above the alarm point where the liquid reaches a predetermined level in the overflow tank to give the high level warning).

d) The venting arrangement of the overflow tank is to permit the free passage of air from the individual tanks, the vent/overflow headers and the overflow tank vent to atmosphere under all conditions

e) The storage tanks are not to be filled by using a cascade filling arrangement (i.e., tanks are not to be filled by overflowing from one to another).

f) The fueling station(s) is to be manned at all times during bunkering and/or fuel oil transfer operations.

g) In lieu of items a) through f), the overflow line common header may be vented to the atmosphere in accordance with the requirements below, in addition to the overflow tank being fitted with a dedicated vent pipe.

i) Vent pipes are to have a minimum internal diameter not less than 38 mm and not less than the internal diameter of the fill line. Where tanks are to be filled by pump pressure, the aggregate area of the vents in the tank is to be at least 125% of the effective area of the filling line, except that when overflows are fitted, the area of the overflow is to be at least 125% of the effective area of the filling line and the vents need not exceed the above minimum size.

ii) Notwithstanding the above, the pump capacity and pressure head are to be considered in the sizing of vents and overflows. When high capacity and/or high head pumps are used, calculations demonstrating the adequacy of the vent and overflows are to be submitted.

(d) Ventilators, Tank Vents and Overflows on the Fore Deck

(i) Application

The requirements of this paragraph applies to all ventilators, tank vents and overflows located on the exposed fore deck within the forward 0.25L on craft with length L (as defined in 1.1.2 of this Part) not less than 80 meters and where the height of the exposed deck in way of the item is less than 0.1L or 22 meters above the summer load waterline, whichever is the lesser.

(ii) Applied Loading to the Air Pipes and Ventilators

(1) Pressure. The pressures p, in kN/m^2, acting on air pipes, ventilator pipes and their closing devices, may be calculated from:

$$p = f\rho V^2 C_d C_s C_p \qquad \text{kN/m}^2$$

where:

f = 0.5

ρ = density of sea water, 1.025 t/m^3

V = velocity of water over the fore deck, 13.5 m/sec

C_d = shape coefficient

= 0.5 for pipes

= 1.3 for pipes or ventilator heads in general

= 0.8 for pipes or ventilator heads of cylindrical form with its axis in the vertical direction

C_s = slamming coefficient, 3.2

C_p = protection coefficient:

= 0.7 for pipes and ventilator heads located immediately behind a breakwater or forecastle

= 1.0 elsewhere including immediately behind a bulwark

(2) Force. Forces acting in the horizontal direction on the pipe and its closing device may be calculated from the above pressure using the largest projected area of each component.

(iii) Strength Requirements for Ventilators, Tank Vents and Overflows and their Closing Devices

(1) Bending Moment and Stress. Bending moments and stresses in air pipes and ventilator pipes are to be calculated at critical positions: at penetration pieces, at weld or flange connections, at toes

of supporting brackets. Bending stresses in the net section are not to exceed 0.8Y, where Y is the specified minimum yield stress or 0.2% proof stress of the steel at room temperature. Irrespective of corrosion protection, a corrosion addition to the net section of 2.0 mm is then to be applied.

(2) Tank Vents and Overflows

a) For standard tank vents and overflows of 760 mm height closed by heads of not more than the tabulated projected area, pipe thicknesses and bracket heights are specified in Table III 2-34 of this Chapter. Where brackets are required, three or more radial brackets are to be fitted.

b) Brackets are to be of gross thickness of 8 mm or more, of minimum length of 100 mm, and height according to Table III 2-34 of this Chapter, but need not extend over the joint flange for the head. Bracket toes at the deck are to be suitably supported.

c) For other configurations, loads according to 2.11.5(d)(ii) of this Chapter are to be applied, and means of support determined in order to comply with the requirements above. Brackets, where fitted, are to be of suitable thickness and length according to their height.

d) Final (gross) pipe thickness for air pipes is not to be taken less than as indicated below. The wall thicknesses of vent pipes where exposed to the weather are to be not less than that specified below. For vent pipes located on the fore deck, as defined in 2.11.5(d)(i) of this Chapter, the wall thickness requirements are to also comply with 2.11.5(d)(ii) and 2.11.5(d)(iii) of this Chapter:

Nominal Size, d	Min. Wall Thickness
d ≤ 65 mm	6.0 mm
65 mm < d < 150 mm	6+0.0029(d-65)
d ≥ 150 mm	8.5 mm

e) The minimum internal diameter of the air pipe or overflow is not to be less than 38 mm.

(3) Ventilators

a) For standard ventilators of 900 mm height closed by heads of not more than the tabulated projected area, pipe thicknesses and bracket heights are specified in Table III 2-35 of this Chapter. Brackets, where required, are to be as specified in 2.11.5(d)(iii)(2)b) of this Chapter.

b) For ventilators of height greater than 900 mm, brackets or alternative means of support are to be provided. Coaming is not to be taken less than as indicated in 2.11.5(b) nor in Table III 2-34 of this Chapter.

(4) Components and Connections. All component parts and connections of the tank vents and overflows or ventilators are to be capable of withstanding the loads defined in 2.11.5(d)(ii) of this Chapter.

(5) Rotary Heads. Rotating type mushroom ventilator heads are not to be used for application in this location.

Table III 2-34
760 mm High Tank Vents and Overflows Thickness and Bracket Standards

Nominal Pipe Size (mm)	Minimum Fitted Gross Thickness (mm)	Maximum Projected Area of Head (cm^2)	Height (1) of Brackets (mm)
65	6.0	---	480
80	6.3	---	460
100	7.0	---	380
125	7.8	---	300
150	8.5	---	300
175	8.5	---	300
200	8.5(2)	1900	300(2)
250	8.5(2)	2500	300(2)
300	8.5(2)	3200	300(2)
350	8.5(2)	3800	300(2)
400	8.5(2)	4500	300(2)

Notes:

(1) Brackets [see 2.11.5(d)(iii)(2) of this Chapter] need not extend over the joint flange for the head.

(2) Brackets are required where the as fitted (gross) thickness is less than 10.5 mm, or where the tabulated projected head area is exceeded.

Note: For other air pipe heights, the relevant requirements of 2.11.5(d)(iii) of this Chapter are to be applied.

Table III 2-35
900 mm High Ventilator Thickness and Bracket Standards

Nominal Pipe Size (mm)	Minimum Fitted Gross Thickness (mm)	Maximum Projected Area of Head (cm^2)	Height (1) of Brackets (mm)
80	6.3	-	460
100	7.0	-	380
150	8.5	-	300
200	8.5	550	-
250	8.5	880	-
300	8.5	1200	-
350	8.5	2000	-
400	8.5	2700	-
450	8.5	3300	-
500	8.5	4000	-

Note: For other ventilator heights, the relevant requirements of 2.11.5(d)(iii) of this Chapter are to be applied.

2.12 Protective Coatings

2.12.1 General

Unless otherwise approved, all steel work is to be suitably coated with paint or equivalent. No final painting or coating is to be performed until all surveys and testing have been completed. All areas not being coated are to be protected during painting, and upon completion of the work any paint accidentally applied to the areas are to be removed.

2.12.2 Preparation

Surfaces that are to be painted are to be completely free of rust, loose paint, dirt, scale, oil, grease, salt deposits, and moisture. Protective coatings are to be applied as soon as practical after cleaning before corrosion or soil forms on the cleaned surface.

If more than seven days elapse between epoxy coats, the surface should be cleaned prior to an application of a tack coat (1-2 wet mils) before the application of the next full coat.

2.12.3 Protection of Steel

(a) Preparation

All steel surfaces that will be coated are to be abrasive blast cleaned. Prior to abrasive blast cleaning, surfaces contaminated with oil or grease are to be cleaned and weld splatters, slag, and flux compounds are to be removed by grinding, sanding, or chipping. In areas where abrasive blasting is not feasible, the surfaces are to be cleaned by mechanical means to remove foreign matter.

Galvanized steels shall be roughened with a light abrasive blast or by mechanical means prior to painting.

(b) All Spaces

Unless otherwise approved, all steel work is to be suitably coated with paint or equivalent.

(c) Salt Water Ballast Space

Tanks or holds for salt water ballast are to have a corrosion-resistant hard type coating such as epoxy or zinc on all structural surfaces. Where a long retention of salt water is expected due to the type of craft or unit, special consideration for the use of inhibitors or sacrificial anodes may be given.

(d) Oil Spaces

Tanks intended for oil need not be coated.

2.12.4 Protection of Aluminum

(a) General

Aluminum alloys intended for hull construction are to be used generally only under conditions that will not induce excessive corrosion. Where exposure to environment that would induce excessive corrosion is expected, suitable coatings, tapes, sacrificial anodes, impressed-current systems or other corrosion prevention measures are to be used. When tapes are used for corrosion protection, they are to be non-wicking and non- water absorbing. Grease containing graphite is not to be used with aluminum, instead, zinc or other suitable base grease is to be used.

(b) Preparation

All aluminum surfaces that will be coated are to be thoroughly cleaned to bare metal, free of corrosion products, dirt, and other contaminants, by light abrasive blasting. Spot cleaning after blasting can be done by power brushing or orbital sanding.

(c) Coatings

Coatings are to be applied in accordance with the manufacturer's instructions, and are to be preceded by appropriate cleaning and possibly chemical conversion of surfaces as may be required in accordance with the manufacturer's recommendations. Coatings are to be free from voids, scratches or other imperfections that are potential sites for localized corrosion.

The composition of coatings is to be compatible with aluminum. Coatings containing copper, lead, mercury or other metals that can induce galvanic or other forms of corrosion are not to be used. Zinc chromate coatings may be used. Insulating coatings intended to prevent galvanic corrosion are not to contain graphite or other conducting materials.

(d) Faying Surfaces – Aluminum to Aluminum

Aluminum faying surfaces that will be exposed to weather, seawater, or other corrosive environment are to be suitable coated to minimize crevice corrosion in way of the faying surfaces.

(e) Faying Surface between Aluminum and Other Metals

(i) Hull

Suitable means are to be taken to avoid direct contact of faying surfaces of aluminum to other metals. When such faying surfaces occur in hull construction, suitable non-wicking and non-water absorbing insulation tapes or coatings are to be used. Faying surfaces between mechanically fastened metal components, except machinery foundations, are to be protected by the use of bedding compounds or adhesives. Other types of joints between aluminum and other metals may be approved in certain applications.

(ii) Piping

Suitable means, such as special pipe hangers, are to be used to avoid conductive connections between aluminum hulls and non-aluminum metal piping systems. Where watertightness is required, such as when piping passes through bulkheads, decks, tanktops, and shell, special fittings will be required to maintain isolation between dissimilar metals.

(iii) Bearing Areas

Bearing areas such as engine beds, pump foundations, propeller shafts, rudder and other appendages of metals other than aluminum are to be suitably isolated by such means as non-metallic bearing casing, non-conductive packing (not containing graphite or other conductors) or suitable tapes and coatings. Alternative methods for minimizing corrosion at these locations will be specially considered. Wicking-type tapes or water-absorbing packing materials such as canvas should not be used. The metals used for such applications are to be selected to minimize galvanic effects; stainless steels are to be considered.

The use of copper-base alloys such as brass or bronze is generally not recommended where galvanic corrosion is of concern, and these materials may only be used when specially approved. In those cases where the use of dissimilar metals cannot be avoided, or where galvanic corrosion is of concern, such as in wet tanks, a suitable sacrificial anode or impressed current system should be installed.

(f) Faying Surface between Aluminum and Non-metals

Aluminum in contact with wood or insulating-type material is to be protected from the corrosive effects of the impurities in these materials by a suitable coating or covering. Concrete used with aluminum is to be free of additives for cold weather pouring. Preformed glass insulation is recommended for piping insulation. Any adhesives which may be used to connect insulation to aluminum are to be free of agents that would be corrosive to aluminum. Foaming agents harmful to aluminum, such as Freon, are not to be used for insulating foams. Areas where dirt or soot is likely to collect and remain for prolonged periods are to be protected from pitting corrosion by the use of coatings or other suitable means.

(g) Corrosion of Wet Spaces

Suitable means are to be used to avoid arrangements that could induce crevice corrosion in wet spaces. In bilge spaces, chain lockers, and similar locations where exfoliation corrosion may be of concern, appropriate materials suitably heat treated for resistance to this form of corrosion are to be employed.

(h) Service at Elevated Temperatures

For service temperatures of 66°C or above, only aluminum alloys and filler metals specially designated for service at these temperatures are to be used.

(i) Cathodic Protection for Corrosion Prevention

For application where corrosion is of concern, consideration is to be given to the use of sacrificial anode or impressed current systems of corrosion control. Details of sacrificial anodes and arrangements are to be submitted for review. Anodes are to be in accordance with national or other recognized standard. When

impressed current systems are used, adequate precautions are to be taken that the negative voltage is not excessive.

(j) Stray Current Protection

Precautions are to be taken when in dock to prevent stray currents from welding power or other sources from adversely affecting the aluminum. Whenever possible, the cathodic protection system of the craft should be in place and operating when the craft is in the water. AC power sources are to be insulated from the hull. For battery and other DC power sources, grounding is to be avoided if possible. Where safety considerations require grounding to the hull, the negative pole is to be connected to the hull.

(k) Bi-material Joints

Such joints, when used, may be required to be appropriately painted, coated, wrapped or protected by other methods to prevent galvanic corrosion. Where aluminum is to be joined to other materials, each faying surface is to be suitably coated to minimize corrosion. In addition, when one or both sides of an aluminum or steel connection to dissimilar metal joints are exposed to weather, sea water, or wet spaces, a minimum of 0.5 mm of suitable insulation is to be installed between faying surfaces and extended beyond the edge of the joint. Non-welded oil or water stops are to be of plastic insulation tape or equivalent which would provide a suitably corrosion resistant system. Insulating materials are to be non-porous and have mechanical properties suitable for the application.

2.12.5 Protection of Fiber Reinforced Plastic

(a) General

Cured gel-coat resins and lay-up resin are to be highly resistant to water and other liquid absorption; appropriate materials, lay-up, and lay-up procedures are to be used and manufacturer's recommendations followed to attain this. Care is to be taken in the use of laminates containing carbon fibers so that they are not close to or do not induce galvanic corrosion with metal fittings.

(b) Preparation

Composite surfaces that are not coated in the mold are to be sanded lightly to remove any foreign matter. Care is to be taken not to expose any of the structural glass. Surfaces are to be cleaned with water and solvent to ensure the removal of residual mold release compound, oil, or grease.

(c) Tanks

In water, fuel oil, or other approved tanks, the resins used are to be compatible with the contents of the tanks; the contents of the tanks are not to affect the cured properties of the tank laminate. The cured laminate is to be highly resistant to absorption of the liquid, and is not to have harmful, deleterious, or undesirable effects on the contents of the tank. The tank is generally to be gel-coated on the inside. See also 2.5.3(a) of this Chapter.

(d) Cathodic Protection

Cathodic protection is to be provided where shaft struts, propeller shafts, propellers, rudders, fittings, etc. are constructed of manganese bronze, brass, stainless steel or mild steel. Details of the sacrificial anodes and arrangements are to be submitted for review. Anodes are to be in accordance with ASTM or other recognized standard.

Chapter 3
Subdivision and Stability

3.1 General Requirements

3.1.1 General

Craft of the following categories are to have subdivision and stability in accordance with the criteria as shown.

3.1.2 Criteria

(a) Intact Stability

All craft which have a length of 24 m or over as defined in the International Convention on Load Lines are to have intact stability guidance as required by Regulation 10 of the International Convention on Load Lines. Following criteria may be used for classification purposes:

(i) For all cargo craft ≥ 500 GT making voyages that are no more than 8 hours at operational speed from a place of refuge and having design speeds greater than $3.7\nabla^{1/6}$ m/sec – IMO International Code of Safety for High-Speed Craft – Chapter 2.

(ii) Other craft of all sizes – International Code on Intact Stability (2008 IS Code)

where

∇ = volumetric displacement of the vessel in the design condition m^3

GT = the gross tonnage as defined in 1.1.15 of this Part

In case the above criteria are not applicable to a particular craft, the intact stability will be reviewed by CR in accordance with other recognized criteria appropriate to the craft's type, size, and intended service.

(b) Subdivision and Damage Stability

Craft of applicable size, type, and service are to have subdivision and damage stability as required by the International Code of Safety for High-Speed Craft, or the International Convention for the Safety of Life at Sea, 1974, as amended as follows:

(i) Cargo craft ≥ 500 GT making voyages that are no more than 8 hours at operation speed and having design speeds greater than $3.7\nabla^{1/6}$ m/sec – IMO International Code of Safety for High-Speed Craft – Chapter 2.

(ii) Other cargo craft ≥ 500 GT – SOLAS Regulation II-1/4 through 7-3.

3.1.3 Onboard Computers for Stability Calculations

The use of onboard computers for stability calculations is not a requirement of class. However, if stability software is installed onboard craft contracted on or after 1 July 2005, it should cover all stability requirements applicable to the craft and is to be approved by CR for compliance with the requirements of Appendix 4 of this Part, “Onboard Computers for Stability Calculations”.

Chapter 4

Fire Safety Measures

4.1 Structural Fire Protection

4.1.1 General

(a) SOLAS Application

For classification purposes, the fire and safety measures contained in the International Convention for the Safety of Life at Sea, 1974 (1974 SOLAS), as amended, are applicable to vessels of type, size and service coming under that Convention. This includes the IMO International Code of Safety for High-Speed Craft (HSC Code), incorporated as Chapter X of 1974 SOLAS, as applicable.

This section does not relax the requirements in other sections of the Rules. Gross tonnage is to be taken as defined in 1.1.15 of this Part.

(b) Regulation

Regulation means the regulation contained in 1974 SOLAS, as amended. An abbreviated notation is used, e.g., Regulation II-2/5.2 means Regulation 5.2 of Chapter II-2.

(c) Definitions

See Regulation II-2/3.

(d) Materials Containing Asbestos

Installation of materials which contain asbestos is prohibited.

(e) For a craft not engaged in international voyage, if the requirements of the Rules are not fully applicable, the relevant drawings and documents are to be submitted to the Society for evaluation of approved alternative requirements, equipment or methods. The alternatives may be accepted by the Society for special consideration.

4.1.2 Cargo Craft

For cargo craft as defined engaged in international voyage in 1.1 through 1.4 of the HSC Code, the relevant requirements in Chapter 7, Part A, Part C and Part D of the HSC Code are applicable.

For all cargo craft subject to 1974 SOLAS as amended, see Part IX of the Rules for Steel Ships.

4.1.3 Light Structure Craft (LSC)

Structural fire safety measures for crafts not engaged in international voyage with LSC notation are to be in accordance with Table I 1-5 in Part I of the Rules.

Chapter 5
Equipment

5.1 Equipment

5.1.1 Documents to be submitted

A detailed drawing, showing all the elements necessary for the evaluation of the equipment number of the craft, is to be submitted together with the calculations of the EN number. The anchoring equipment to be fitted on the concerned craft is to be specified.

Windlass, brake and chain stopper are subject to approval by the Society, the relevant documentation is to be submitted.

5.1.2 General

(a) The anchoring equipment required in 5.1.3 is intended for temporary, occasional mooring of a craft within a harbour or sheltered area when the craft is awaiting berth, tide, etc.

(b) The equipment is therefore not designed to hold a craft off fully exposed coasts in rough weather or to stop a craft which is moving or drifting. In this condition the loads on the anchoring equipment increase to such a degree that its components may be damaged or lost owing to the high energy forces generated, particularly in large craft.

(c) For craft where frequent anchoring in open sea is expected, the owner's and shipyard's attention is drawn to the fact that anchoring equipment should be provided in excess of the requirements of these Rules.

(d) The anchoring equipment required in 5.1.3 is designed to hold a ship in good holding ground in conditions such as to avoid dragging of the anchor. In poor holding ground the holding power of the anchors will be significantly reduced.

(e) For small craft, with a length L ≤ 25 m, some partial exemption from these Rules may be accepted especially for what concerns anchor operation; in particular, where proper and safe anchor operation is assured, hand-operated machinery and/or absence of hawse pipe may be accepted.

5.1.3 Equipment number

(a) General

(i) The equipment is in general to be in accordance with the requirements given in Table III 5-1, and may be reduced as per Table III 5-2 in accordance with the ship's Service Restriction Notation.

(ii) When two bow anchors are fitted, the mass of each anchor, the diameter and the length of each chain cable are to comply with the requirements given in Table III 5-1.

(iii) The equipment number EN is to be calculated as follows:

$$\mathrm{EN} = \Delta^{2/3} + 2BH + 0.1A$$

where

Δ	=	the maximum displacement	t
H	=	effective height from the summer load waterline to the top of the uppermost deckhouse, to be measured as follows: $\mathrm{H} = \mathrm{a} + \sum h_i \sin\theta_i$	m
a	=	the distance from summer load water line amidships to the upper deck at side	m

h_i	=	the height on the centerline of each tier of deck houses having an actual breadth greater than B/4, where B is the breadth as defined in 1.1.4 of this Part	m
θ_i	=	the angle of inclination aft of each front bulkhead as shown on Fig. III 5-1	
A	=	the area in profile view of the hull superstructures and deck houses above the summer load waterline which is within the rule length of the craft defined in 1.1.2 of this Part and with a breadth greater than B/4.	m^2

In the measurement of Σh_i and A, sheer and trim are to be ignored.

If a deck house broader than B/4 is placed on top of another deck house equal to or less than B/4 in breadth, only the widest is to be considered and the narrowest may be ignored.

Windscreens or bulwarks and hatch coamings more than 1.5 m in height above the deck at side are to be regarded as parts of superstructures and houses when determining H and A.

In the calculation of A, when a bulwark is more than 1.5 m in height, the crosshatched area of Fig. III 5-1 is to be considered.

For catamarans, the cross-sectional area of the tunnel above the waterline may be deducted from BH in the formula.

5.1.4 Anchor

(a) Mass of anchors

(i) Table III 5-1 indicates the mass of a "high holding power anchor" (HHP) i.e. anchor having a holding power equal to, at least, two times greater than that of an ordinary anchor.

(ii) "Super high holding power anchors" (SHHP), i.e. anchors having a holding power equal to, at least, four times that of an ordinary anchor, may be used as indicated in Table III 5-1.

(iii) The actual mass of each anchor may vary within (+7, -7) percent of the value shown in the table, provided that the total mass of anchors is not less than would have been required for anchors of equal mass.

(iv) Normally HHP or SHHP anchors are to be used. Possible use of ordinary anchors would be specially considered by the Society.

(b) Anchor design

(i) Anchors are to have appropriate shape and scantlings in compliance with Society requirements and are to be constructed in compliance with Society requirements.

(ii) A high or super high holding power anchor is to be suitable for use on board without any prior adjustment or special placement on the ground.

(iii) For approval and/or acceptance as a high or super high holding power anchor, the anchor is to have a holding power equal, respectively, to at least twice or four times that of an ordinary stockless anchor of the same mass.

(iv) Comparative tests on ordinary stockless anchors are to be carried out at sea and must provide satisfactory results on various types of sea beds.

Alternatively sea trials by comparison with a previously approved HHP anchor may be accepted as a basis for approval.

Such tests are to be carried out on anchors whose masses are, as far as possible, representative of the full range of sizes proposed for the approval.

At least two anchors of different sizes are to be tested. The mass of the greatest anchor to be approved is not to be in excess of 10 times that of the maximum size tested and the mass of the smallest is to be not less than 0.1 times that of the minimum size tested.

Tests are normally to be carried out by means of a tug, but, alternatively, shore-based tests may be accepted.

The length of the chain cable connected to the tested anchor, having a diameter appropriate to its mass, is to be such that the pull acting on the shank remains practically horizontal. For this purpose a scope of chain cable equal to 10 is deemed normal; however lower values may be accepted.

Three tests are to be carried out for each anchor and type of ground.

The pull is to be measured by means of a dynamometer; measurements based on the bollard pull against propeller's revolutions per minute curve may be accepted instead of dynamometer readings.

Anchor stability and its ease of dragging are to be noted down, whenever possible.

(v) Upon satisfactory outcome of the above tests, the Society will issue a certificate declaring the compliance of "high or super high holding power" anchors with its relevant Rules.

5.1.5 Chain cables

(a) Bow anchors are to be used in connection with stud link chain cables whose scantlings and steel grades are to be in accordance with the requirements of the Society.

(b) Normally grade 2 or grade 3 stud link chain cables are to be used with HHP anchors. In case of SHHP anchors grade 3 chain cables are to be used.

(c) Proposal for use of grade 1 chain cables connected to ordinary anchors will be specially considered by the Society.

(d) For craft with an Equipment Number EN ≤ 205 studless short link chain cables may be used provided that:

(i) steel grade of the studless chain is to be equivalent to the steel grade of the stud chains it replaces, i.e. referring to ISO standard 1834:

- Class M(4) [grade 40] in lieu of grade 2,
- Class P (5) [grade 50] in lieu of grade 3,

(ii) equivalence in strength is to be based on breaking load.

(iii) the studless chain cable meets the requirements of the Society.

(e) The proof loads PL and breaking loads BL, in kN, required for the studless link chain cables are given by the following formulae, where d, in mm, is the required diameter of grade 2 and grade 3 stud chain cables taken from Table III 5-1:

grade 2: PL2 $= 9.807\ d^2\ (44 - 0.08\ d)\ 10^{-3}$

BL2 $= 13.73\ d^2\ (44 - 0.08\ d)\ 10^{-3}$

grade 3: PL3 $= 13.73\ d^2\ (44 - 0.08\ d)\ 10^{-3}$

BL3 $= 19.61\ d^2\ (44 - 0.08\ d)\ 10^{-3}$

(f) The method of manufacture of chain cables and the characteristics of the steel used are to be approved by the Society for each manufacturer. The material from which chain cables are manufactured and the completed chain cables themselves are to be tested in accordance with the appropriate requirements.

(g) Chain cables are to be made of unit lengths ("shots") of 27.5 m minimum joined together by Dee or lugless shackles.

5.1.6 Steel wire ropes for anchors

(a) Steel wire ropes may be used as an alternative to stud link chain cables required in Table III 5-1 when EN ≤ 500, provided that the following requirements are complied with.

(b) The length Lswr of steel wire rope is to be not less than:

$L_{swr} = L_{ch}$ when EN ≤ 130

$L_{swr} = L_{ch}(EN+850)/900$ when 130 < EN ≤ 0

(c) where Lch is the length of stud link chain cable required by the Table III 5-1.

(d) The effective breaking load of the steel wire rope is to be not less than the required breaking load of the chain cable it replaces.

(e) A short length of chain cable having scantlings complying with 5.1.5 is to be fitted between the steel wire rope and the bow anchor. The length of this chain part is to be not less than 12.50 m or the distance from the anchor in its stowed position to the windlass, whichever is the lesser.

5.1.7 Synthetic fibre ropes for anchors

(a) Synthetic fibre ropes may be used as an alternative to stud link chain cables required in Table III 5-1 when EN ≤ 130, provided that the following requirements are complied with.

(b) Fibre ropes are to be made of polyamide or other equivalent synthetic fibres, excluding polypropylene.

(c) The length Lsfr of the synthetic fibre rope is to be not less than:

$L_{sfr} = L_{ch}$ when EN ≤ 60

$L_{sfr} = L_{ch}(EN+170)/200$ when 60 < EN ≤ 130

where L_{ch} is the length of stud link chain cable required by the Table III 5-1.

(d) The effective breaking load P_s in kN, of the synthetic fibre rope is to be not less than the following value:

$$P_s = 2.2\ BL^{8/9}$$

where BL, in kN, is the required breaking load of the chain cable replaced by the synthetic fibre rope (BL can be determined by the formulae given in 5.1.5(e)).

(e) A short length of chain cable complying with 5.1.5 is to be fitted between the synthetic fibre rope and the bow anchor.

5.1.8 Attachment pieces

Both attachment pieces and connection fittings for chain cables are to be designed and constructed in such a way as to offer the same strength as the chain cable and are to be tested in accordance with the appropriate requirements.

5.1.9 Arrangement of anchors and chain cables

(a) The bow anchors, connected to their own chain cables, are to be so stowed as to always be ready for use.

(b) Hawse pipes are to be of a suitable size and so arranged as to create, as far as possible, an easy lead for the chain cables and efficient housing for the anchors.

(c) For this purpose chafing lips of suitable form with ample lay-up and radius adequate for the size of the chain cable are to be provided at the shell and deck. The shell plating at the hawse pipes is to be reinforced as necessary.

5.1.10 Windlass

(a) The windlass is to be power driven and suitable for the size of chain cable, and is to have the characteristics stated below.

(b) The windlass is to be fitted in a suitable position in order to ensure an easy lead of the chain cable to and through the hawse pipe; the deck, at the windlass, is to be suitably reinforced.

(c) The windlass is to be able to supply, for at least 30 minutes, a continuous duty pull P_c, in N, corresponding to the grade of the chain cables, given by the following formulae:

- for grade 2 chain cables: $P_c = 42.5\ d^2$ (N)
- for grade 3 chain cables: $P_c = 47.5\ d^2$ (N)

where d is the stud link chain cable diameter of the intended steel grade, in mm.

(d) The windlass unit prime mover is to provide the necessary temporary overload capacity for breaking out the anchor.

The temporary overload capacity or "short term pull" is to be not less than 1.5 times the continuous duty pull P_c for at least 2 minutes.

The speed in this overload period may be lower than the nominal speed specified in 5.1.10(e).

(e) The nominal speed of the chain cable when hoisting the anchor and cable may be a mean speed only and is to be not less than 0.15 m/s.

The speed is to be measured over two shots of chain cable during the entire trip; the test is to commence with 3 shots (82.5 m) of chain fully submerged, or with the longest practicable submerged chain length where the chain length does not allow 3 shots to be paid out.

(f) The windlass is to be provided with a brake having sufficient capacity to stop chain cable and anchor when paying out, even in the event of failure of the power supply.

(g) Windlass and brake not combined with a chain stopper have to be designed to withstand a pull of 80% of the breaking load of the chain cable without any permanent deformation of the stressed parts and without brake slip.

Windlass and brake combined with a chain stopper have to be designed to withstand a pull of 45% of the breaking load of the chain cable.

(h) The stresses on the parts of the windlass, its frame and brake are to be below the yield point of the material used.

The windlass, its frame and the brakes are to be efficiently anchored to the deck.

(i) Performance criteria and strength of windlasses are to be verified by means of workshop testing according to Society Rules.

5.1.11 Chain stopper

(a) A chain stopper is normally to be fitted between the windlass and the hawse pipe in order to relieve the windlass of the pull of the chain cable when the ship is at anchor.

(b) A chain stopper is to be capable of withstanding a pull of 80% of the breaking load of the chain cable; the deck at the chain stopper is to be suitably reinforced.

However, fitting of a chain stopper is not compulsory.

(c) Chain tensioners or lashing devices supporting the weight of the anchor when housed in the anchor pocket are not to be considered as chain stoppers.

(d) Where the windlass is at a distance from the hawse pipe and no chain stopper is fitted, suitable arrangements are to be provided to lead the chain cable to the windlass.

5.1.12 Chain locker

(a) The chain locker is to be of a capacity adequate to stow all chain cable equipment and provide an easy direct lead to the windlass.

(b) Where two anchor lines are fitted, the port and starboard chain cables are to be separated by a steel bulkhead in the locker.

(c) The inboard ends of chain cables are to be secured to the structure by a fastening able to withstand a force not less than 15% nor more than 30% of the breaking load of the chain cable.

In an emergency, the attachments are to be easily released from outside the chain locker.

(d) Where the chain locker is arranged aft of the collision bulkhead, its boundary bulkheads are to be watertight and a drainage system provided.

5.1.13 Anchoring sea trails

(a) The anchoring sea trials are to be carried out on board in the presence of a Society surveyor.

(b) The test is to demonstrate that the windlass complies with the requirements given in 5.1.10(e).

(c) The brake is to be tested during lowering operations.

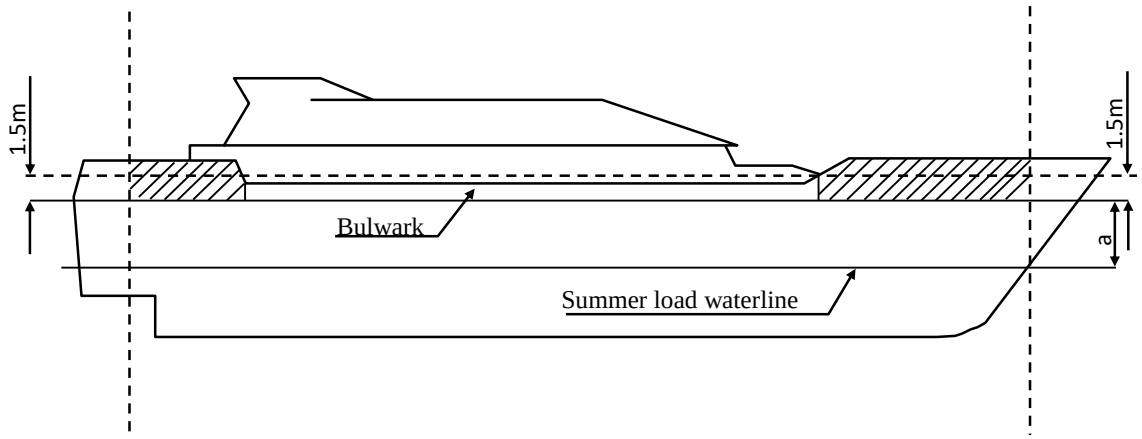

Fig. III 5-1

Table III 5-1
Equipment

Equipment No. EN		Number	Anchors		Stud-link chain cables				Mooring lines	
			Mass per anchor		Total length (m)	Diameter and steel grade			Steel or fibre ropes	
			HHP	SHHP		Grade 1	Grade 2	Grade 3	Minimum number and length	Minimum breaking strength
Over	Up to		(kg)	(kg)		(mm)	(mm)	(mm)	(m)	(kN)
30	39	1	93	62	115	12.5			2 × 40	32
40	49	1	119	79	115	12.5			2 × 40	32
50	59	1	146	97	130	14	12.5		3 × 40	34
60	69	1	171	114	130	14	12.5		3 × 40	34
70	79	1	198	138	130	16	14		3 × 50	37
80	89	1	224	149	130	16	14		3 × 50	37
90	99	1	251	167	150	17.5	16		3 × 55	39
100	109	1	276	184	150	17.5	16		3 × 55	39
110	119	1	303	202	150	19	17.5		3 × 55	44
120	129	1	329	219	150	19	17.5		3 × 55	44
130	139	1	356	237	165	20.5	17.5		3 × 60	49
140	149	1	383	255	165	20.5	17.5		3 × 60	49
150	159	1	408	272	165	22	19		3 × 60	54
160	174	1	441	294	165	22	19		3 × 60	54
175	189	1	480	320	180	24.5	20.5		3 × 60	59
190	204	1	521	347	180	24.5	20.5		3 × 60	59
205	219	1	560	373	180	26	22	20.5	4 × 60	64
220	239	1	606	404	180	26	22	20.5	4 × 60	64
240	259	1	659	439	200	28	24	22	4 × 60	69
260	279	1	711	474	200	28	24	22	4 × 60	69
288	299	1	764	509	215	30	26	24	4 × 70	74
300	319	1	816	544	215	30	26	24	4 × 70	74
320	339	1	869	579	215	32	28	24	4 × 70	78
340	359	1	926	617	215	32	28	24	4 × 70	78
360	379	1	974	649	230	34	30	26	4 × 70	88
380	399	1	1028	685	230	34	30	26	4 × 70	88
400	424	1	1086	724	230	36	32	28	4 × 70	98
425	449	1	1152	768	230	36	32	28	4 × 70	98
450	474	1	1226	817	230	36	32	28	4 × 70	108
475	499	1	1284	856	230	38	34	30	4 × 70	108
500	549	2	1403	935	248	40	34	30	4 × 80	123
550	599	2	1535	1024	264	42	36	32	4 × 80	132
600	659	2	1694	1129	264	44	38	34	4 × 80	147
660	719	2	1853	1235	264	46	40	36	4 × 80	157
720	779	2	2012	1341	281	48	42	36	4 × 85	172
780	839	2	2171	1447	281	50	44	38	4 × 85	186
840	909	2	2329	1553	281	52	46	40	4 × 85	201
910	979	2	2515	1676	297	54	48	42	4 × 85	216
980	1059	2	2700	1800	297	56	50	44	4 × 90	230
1060	1139	2	2912	1941	297	58	50	46	4 × 90	250
1140	1219	2	3124	2082	314	60	52	46	4 × 90	270
1220	1299	2	3335	2224	314	62	54	48	4 × 90	284
1300	1389	2	3574	2382	314	64	56	50	4 × 90	309
1390	1479	2	3812	2541	330	66	58	50	5 × 90	324
1480	1569	2	4050	2700	330	68	60	52	5 × 95	324
1570	1669	2	4315	2876	330	70	62	54	5 × 95	333
1670	1789	2	4632	3088	347	73	64	56	5 × 95	353
1790	1930	2	4950	3300	347	76	66	58	5 × 95	378

Table III 5-2
Equipment Reductions for Service Restriction Notations (see Table III 5-1)

Service Restriction Notation	Number of bow anchors	Mass change per anchor	Length change of stud-link chain cables
Greater Coastal Service	1	No reduction	No reduction
Coastal Service	1	-30%	No reduction
Greater Coastal Service	2	-30%	+60%
Coastal Service	2	-50%	+60%

Notes:
(1) Other specified Restricted Service Notations may be specially considered.
(2) Please refers to I/1.4.4 of the Rules for Steel Ships for the definition of Service Restriction Notation.

Chapter 6
Navigation Bridge Visibility

6.1 General

The requirements in this Chapter apply to ships of not less than 55 m in length overall (L_{OA}).

6.2 View of the Sea Surface

The view of the sea surface from the conning position is not to be obscured by more than two ship lengths overall or 500 m, whichever is less, forward of the bow to 10° on either side under all conditions of the ship's draught, trim and deck cargo. See Fig. III 6-1.

6.3 Blind Sectors

Each blind sector caused by cargo, cargo gear or other obstructions outside of the wheelhouse forward of the beam obstructing the view of the sea surface as seen from the conning position is not to exceed 10°. The total arc of blind sectors is not to exceed 20 degrees. The clear sectors between blind sectors are to be at least 5 degrees. However, in the view described in 6.2, each individual blind sector is not to exceed 5 degrees.

6.4 Horizontal Field of Vision

6.4.1 The horizontal field of vision from the conning position is to extend over an arc of not less than 225°, that is from more than 22.5° abaft the beam on one side, through forward, to more than 22.5° abaft the beam on the other side. See Fig. III 6-2.

6.4.2 From each bridge wing the horizontal field of vision is to extend over an arc from at least 45° on the opposite bow through right ahead and then aft to 180° from dead ahead. See Fig. III 6-3.

6.4.3 From main steering position the horizontal filed of vision is to extend over an arc from right ahead to at least 60°on each side. See Fig. III 6-4.

6.5 Ship's Side

The ship's side is to be visible from the navigation bridge wing. The arrangement of bridge may refer to IMO MSC.1/Circ. 1350.

6.6 Navigation Bridge Front Windows

6.6.1 The height of the lower edge of navigation bridge front windows above the deck is to kept as low as possible.

6.6.2 The upper edge of the navigation bridge front windows is to allow a forward view of the horizon when the ship is pitching in heavy seas for a person with an eye height of 1800 mm above bridge deck at the conning position. The Society, if satisfied that a 1800 mm height of eye is unreasonable and impractical, may allow reduction of the height of eye but not to less than 1600 mm.

6.6.3 To help avoid reflections, the navigation bridge front windows are to be inclined from the vertical plane top out, at an angle of not less than 10° and not more than 25°.

6.6.4 At all times, regardless of weather conditions, at least two of the navigation bridge front windows are to provide a clear view and, depending on the bridge layout, an additional number of clear view windows are to be provided.

6.6.5 Framing between navigation bridge windows is to be kept to minimum and is not to be installed immediately forward of any workstation.

6.6.6 Polarized and tinted windows are not to be fitted.

6.7 Ships of Unconventional Design

6.7.1 With ships of unconventional design which, in the opinion of the society, the arrangements are to be provided to achieve a level of visibility that is as near as practical to those prescribed in this Chapter.

6.8 Navigation Bridge Visibility during Ballast Water Exchange

6.8.1 During the intermediate stages of ballast water exchange, navigation bridge visibility need not comply with 6.2 and 6.4 of this Chapter.

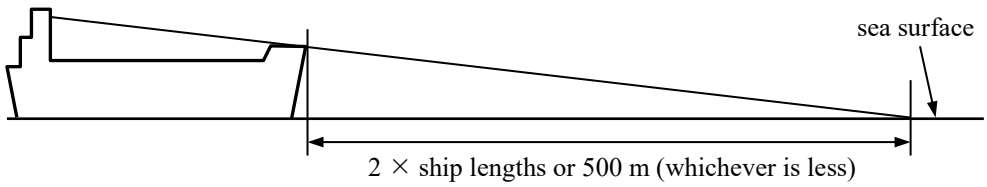

Fig. III 6-1
View of the Sea Surface from Conning Position

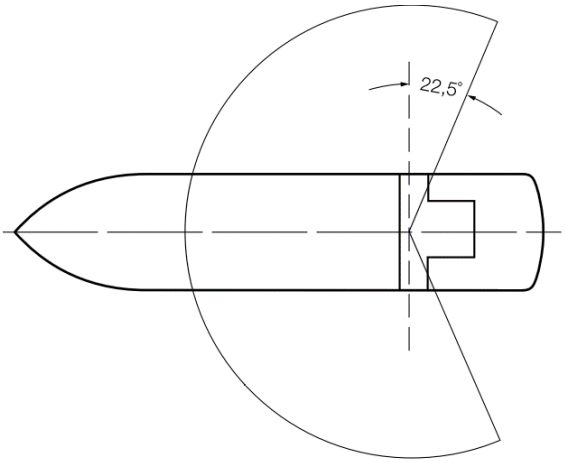

Fig. III 6-2
Field of Vision from the Workstations for Navigation/Manoeuvring

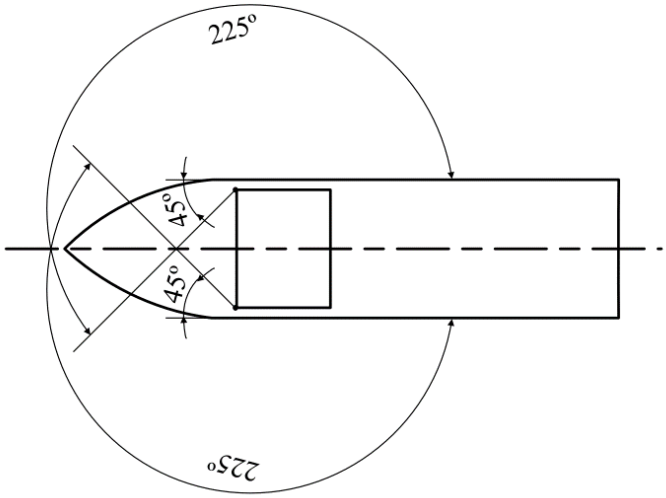

Fig. III 6-3
Horizontal Field of Vision From Each Bridge Wing

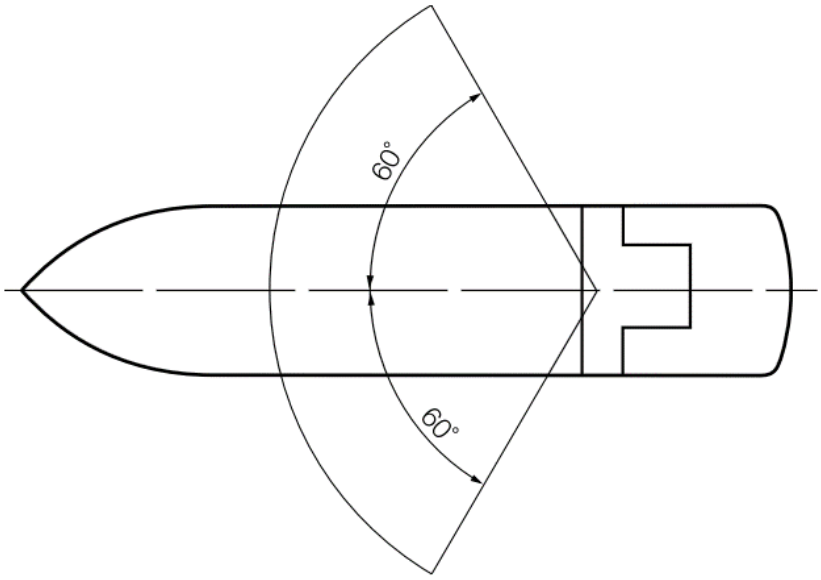

Fig. III 6-4
Horizontal Field of Vision from the Main Steering Position

Chapter 7

Testing, Trials and Surveys During Construction – Hull

7.1 Tank, Bulkhead and Rudder Tightness Testing

The testing requirements for crafts are to be in accordance with Part II, 1.4 of the Rules for Steel Ships.

7.2 Trials

7.2.1 Anchor Windlass Trials

Each windlass is to be tested under working conditions after installation onboard to demonstrate satisfactory operation. Each unit is to be independently tested for braking, clutch functioning, lowering and hoisting of chain cable and anchor, proper riding of the chain over the chain lifter, proper transit of the chain through the hawse pipe and the chain pipe, and effecting proper stowage of the chain and the anchor. It is to be confirmed that anchors properly seat in the stored position and that chain stoppers function as designed if fitted. Also, it is to be demonstrated that the windlass is capable of lifting each anchor with 82.5 meters length of chain submerged and hanging free. The braking capacity is to be tested by intermittently paying out and holding the chain cable by means of the application of the brake. Where the available water depth is insufficient, the proposed test method will be specially considered.

7.2.2 Bilge System Trials

All elements of the bilge system are to be tested to demonstrate satisfactory pumping operation, including emergency suctions and all controls. Upon completion of the trials, the bilge strainers are to be opened, cleaned and closed up in good order.

7.2.3 Steering Trials

Refer to 2.4.10 of Part IV for the technical details of the steering trials.

7.3 Surveys

7.3.1 Construction Welding and Fabrication

For surveys of hull construction welding and fabrication, refer to Part XII of the Rules for Steel Ships and Part II, Chapter 2 of the Rules.

7.3.2 Hull Castings and Forgings

For surveys in connection with the manufacture and testing of hull castings and forgings, refer to Part XI of the Rules for Steel Ships.

7.3.3 Piping

For surveys in connection with the manufacture and testing of piping, refer to Part IV, Chapter 3 of the Rules.

Appendix 1

Guidelines for Calculating Bending Moment and Shear Force in Rudders and Rudder Stocks

A1.1 Application

Bending moments, shear forces and reaction forces of rudders, stocks and bearings may be calculated according to this Appendix for the types of rudders indicated. Moments and forces on rudders of different types or shapes than those shown are to be calculated using alternative methods and will be specially considered.

A1.2 Spade Rudders

A1.2.1 Rudder Blade

(a) Shear Force

For regular spade rudders as shown in Fig. III A1-1(a) of this Appendix, the shear force, V(z), at a horizontal section of the rudder above baseline is given by the following equation:

$$V(z) = \frac{zC_R}{A}\left[c_l + \frac{z}{2l_R}(c_u - c_l)\right] \qquad \text{kN}$$

where:

z	=	distance from the rudder baseline to the horizontal section under consideration	m
C_R	=	rudder force, as defined in 2.8.2 of this Part	kN
A	=	total projected area of rudder blade as defined in 2.8.2 of this Part	m^2

c_l, c_u and l_R are dimensions as indicated in Fig. III A1-1(a) of this Appendix, in m.

For spade rudders with embedded rudder trunks let deep in the rudder blade, as shown in Fig. III A1-1(b) of this Appendix, the shear forces at rudder horizontal sections above rudder baseline in areas A1, and A2, are given by the following equations:

$$V(z')_1 = \frac{z'C_{R1}}{A_1}\left[c_u + \frac{z'}{2l_l}(c_u - c_b)\right] \qquad \text{kN, over } A_1$$

$$V(z)_2 = \frac{zC_{R2}}{A_2}\left[c_b + \frac{z}{2l_b}(c_b - c_l)\right] \qquad \text{kN, over } A_2$$

where:

z'	=	l_R-z	
C_{R1}	=	rudder force over rudder area A_1	kN
	=	$\frac{A_1}{A}C_R$	
C_{R2}	=	rudder force over rudder area A_2	kN
	=	$\frac{A_2}{A}C_R$	
A_1	=	partial rudder blade area above neck bearing and below rudder top	mm^2
A_2	=	partial rudder blade area above rudder baseline and below neck bearing	mm^2

z, A, and C_R are as indicated in A1.2.1(a) of this Appendix.

c_l, c_b, c_u, l_u and l_b are dimensions as illustrated in Fig. III A1-1(b) of this Appendix.

(b) Bending Moment

For regular spade rudders, bending moment, *M(z)*, at a horizontal section *z* meters (feet) above the baseline of the rudder is given by the following equations:

$$M(z) = \frac{z^2 C_R}{2A}\left[c_l + \frac{z}{3l_R}(c_u - c_l)\right] \qquad \text{kN-m}$$

For spade rudders with embedded rudder trunk, the bending moment at a horizontal section within area A_1 is obtained from the following:

$$M(z')_1 = \frac{(z')^2 C_{R1}}{2A_1}\left[c_u + \frac{z'}{3l_l}(c_u - c_b)\right] \qquad \text{kN-m}$$

With the maximum bending moment M_1 over area A_1 equals to:

$$M_1 = C_{R1} l_l \left[1 - \frac{2c_b + c_u}{3(c_b + c_u)}\right] \qquad \text{kN-m}$$

For spade rudders with embedded rudder trunk, the bending moment at a horizontal section within area A_2 is obtained from the following:

$$M(z)_2 = \frac{z^2 C_{R2}}{2A_2}\left[c_l + \frac{z}{3l_b}(c_u - c_l)\right] \qquad \text{kN-m}$$

With the maximum bending moment M_2 over area A_2 equals to:

$$M_2 = C_{R2} l_b \frac{2c_l + c_b}{3(c_l + c_b)} \qquad \text{kN-m}$$

where z, z', C_{R1}, C_{R2}, A_1, A_2, c_l, c_u and l_R are as defined in A1.2.1(a) of this Appendix.

A1.2.2 Lower Stock

(a) Shear Force

For regular spade rudder, the shear force, V_l, at any section of the lower stock between the top of the rudder and the neck bearing is given by the following equation:

$$V_l = C_R \qquad \text{kN}$$

For spade rudder with embedded rudder trunk, the shear force at any section of the stock between the top of the rudder and the neck bearing is given by the following equation:

$$V_l = \frac{M_2 - M_1}{l_u + l_l} \qquad \text{kN}$$

where C_R, l_l, and l_u are as defined in A1.2.1(a) of this Appendix.

(b) Bending Moment at Neck Bearing

For regular spade rudder, the bending moment in the rudder stock at the neck bearing, M_n, is given by the following equation:

$$M_n = C_R\left[l_l + \frac{l_R(2c_l + c_u)}{3(c_l + c_u)}\right] \qquad \text{kN-m}$$

where:

C_R = rudder force, as defined in 2.8.2 of this Part

c_l, c_u, l_l and l_R are dimensions as indicated in Fig. III A1-1 of this Appendix, in m.

For spade rudder with embedded rudder trunk, the bending moment in the rudder stock at the neck bearing is given by the following equation:

$$M_n = M_2 - M_1 \qquad \text{kN-m}$$

where M_1 and M_2 are as defined in A1.2.1(b) of this Appendix.

Where partial submergence of the rudder leads to a higher bending moment in the rudder stock at the neck bearing (compared with the fully submerged condition), M_n is to be calculated based on the most severe partially submerged condition.

A1.2.3 Moment at Top of Upper Stock Taper

For regular spade rudder, the bending moment in the upper rudder stock at the top of the taper, M_t, is given by the following equation:

$$M_t = C_R\left[l_l + \frac{l_R(2c_l + c_u)}{3(c_l + c_u)}\right] \times \left[\frac{(l_u + l_R + l_l - z_t)}{l_u}\right] \qquad \text{kN-m}$$

For spade rudder with embedded rudder trunk, the bending moment in the upper rudder stock at the top of the taper is given by the following equation:

$$M_t = M_R\left[\frac{(l_R + l_u - z_t)}{l_u}\right] \qquad \text{kN-m}$$

where:

z_t = distance from the rudder baseline to the top of the upper rudder stock taper m

C_R = rudder force, as defined in A1.2.1(a) of this Appendix

M_R is the greater of M_1 and M_2, as defined in A1.2.1(b) of this Appendix

c_l, c_u, l_l, l_u and l_R are dimensions as indicated in Fig. III A1-1 of this Appendix, in m.

A1.2.4 Bearing Reaction Forces

For regular spade rudder, the reaction forces at the bearings are given by the following equations:

P_u = reaction force at the upper bearing

$$= -\frac{M_n}{l_u} \qquad \text{kN}$$

P_n = reaction force at the neck bearing

$$= C_R + \frac{M_n}{l_u} \qquad \text{kN}$$

For spade rudder with embedded rudder trunk, the reaction forces at the bearings are given by the following equations:

$$P_u = -\frac{M_n}{l_u + l_l} \qquad \text{kN}$$

$$P_n = C_R + P_u \qquad \text{kN}$$

where:

M_n = bending moment at the neck bearing, as defined in A1.2.2(b) of this Appendix

C_R = rudder force, as defined in 2.8.2 of this Part

l_u is as indicated in Fig. III A1-1 of this Appendix, in m.

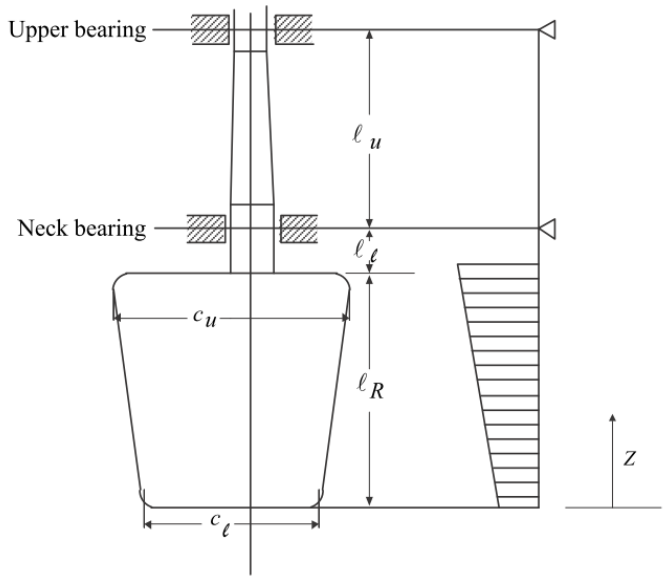

(a) Regular Spade Rudder

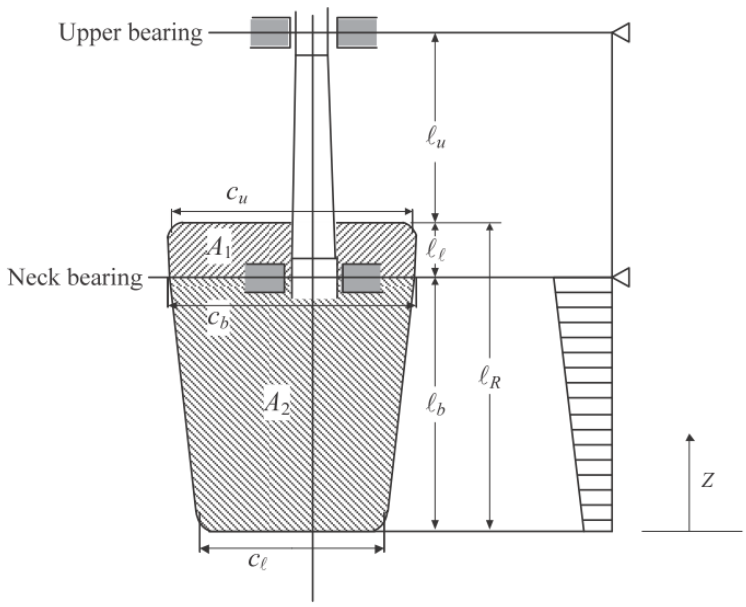

(b) Spade Rudder with Embedded Rudder Trunk

Fig. III A1-1
Spade Rudder

A1.3 Rudders Supported by Shoepiece

A1.3.1 Shear Force, Bending Moment and Reaction Forces

(a) Shear force, bending moment and reaction forces may be calculated according to the model given in Fig. III A1-2 of this Appendix.

w_R = rudder load per unit length

$= \dfrac{C_R}{l_R}$ kN/m

where:

C_R = rudder force, as defined in 2.8.2 of this Part

k_s = spring constant reflecting support of the shoe piece

$= \dfrac{6.18 I_s}{l_s^3}$ kN/m

I_s = moment of inertia of shoe piece about the vertical axis cm^4

l_l, l_s, l_R and l_u are dimensions as indicated in Fig. III A1-2 of this Appendix, in m.

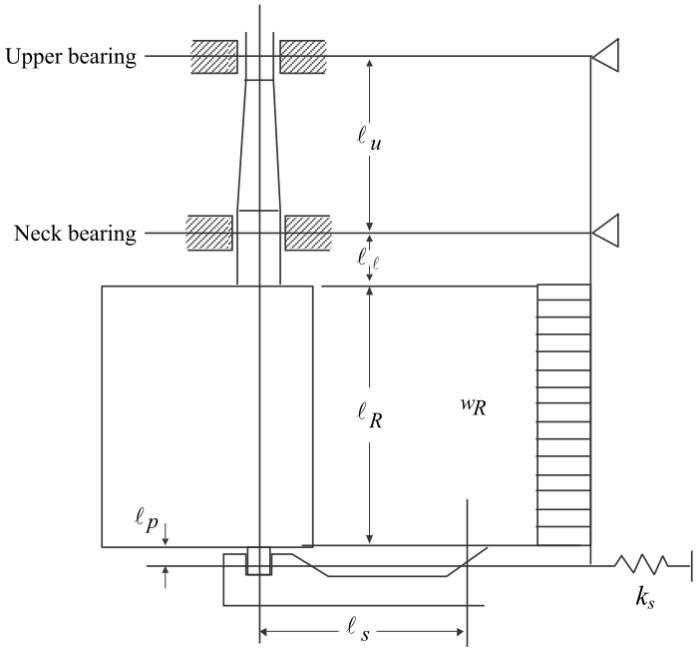

Fig. III A1-2
Rudder Supported by Shoepiece

A1.4 Rudders Supported by a Horn with One Pintle

A1.4.1 Shear Force, Bending Moment and Reaction Forces

(a) Shear force, bending moment and reaction forces are to be assessed by the simplified beam model shown in Fig. III A1-3 of this Appendix.

w_{R1} = rudder load per unit length above pintle

$= \dfrac{C_{R1}}{l_{R1}}$ kN/m

w_{R2} = rudder load per unit length below pintle

$= \dfrac{C_{R2}}{l_{R2}}$ kN/m

where:

C_{R1} = rudder force, as defined in 2.8.2(b) of this Part

C_{R2} = rudder force, as defined in 2.8.2(b) of this Part

k_h = spring constant reflecting support of the horn

$$= \frac{1}{\frac{l_h^3}{4.75 I_h} + \frac{\Sigma\left(\frac{s_i}{t_i}\right) e^2 l_h}{3.17 a^2}}$$ kN/m

a	=	mean area enclosed by the outside lines of the rudder horn	cm^2
s_i	=	the girth length of each segment of the horn of thickness t_i	cm
t_i	=	the thickness of each segment of horn outer shell of length s_i	cm
I_h	=	moment of inertia of horn section at I_h about the longitudinal axis	cm^4

e, l_h, l_{R1} and l_{R2} are dimensions as indicated in Fig. III A1-3 of this Appendix, in m.

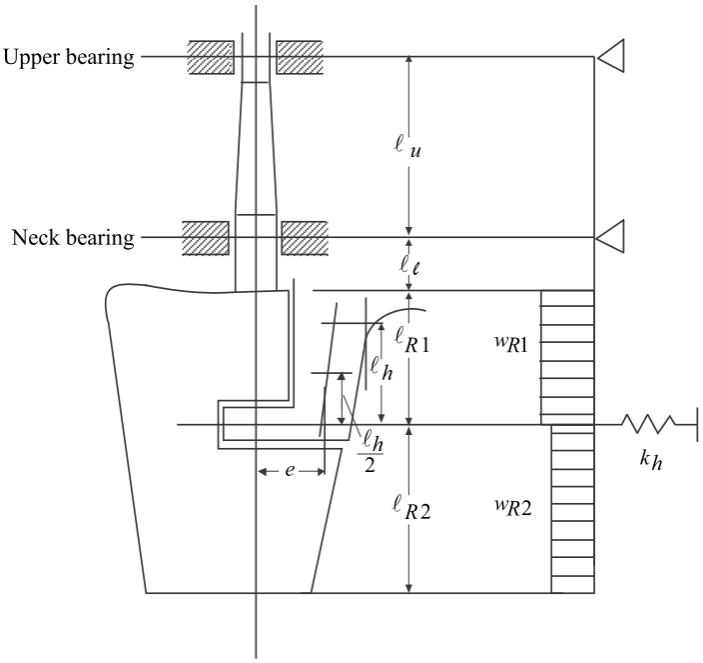

Fig. III A1-3
Rudder Supported by a Horn with One Pintle

A1.5 Rudders Supported by a Horn Arranged with Two Pintles (Supports)

A1.5.1 Shear Force, Bending Moment and Reaction Forces

(a) Shear force, bending moment and reaction forces are to be assessed by the simplified beam model shown in Fig. III A1-4 of this Appendix.

w_{R1} = rudder load per unit length above lower rudder support/pintle

$$= \frac{C_{R1}}{l_{R1}}$$ kN/m

w_{R2} = rudder load per unit length below lower rudder support/pintle

$$= \frac{C_{R2}}{l_{R2}}$$ kN/m

where:

C_{R1} = rudder force, as defined in 2.8.2(b) of this Part
C_{R2} = rudder force, as defined in 2.8.2(b) of this Part

l_{R1} and l_{R2} are dimensions as indicated in Fig. III A1-4 of this Appendix, in m.

In Fig. III A1-4 of this Appendix the variables K_{11}, K_{22}, K_{12} are rudder horn compliance constants calculated for rudder horn with 2-conjugate elastic supports. The 2-conjugate elastic supports are defined in terms of horizontal displacements, y_i, by the following equations:

- At the lower rudder horn bearing:

$y_1 = -K_{12}B_2 - K_{22}B_1$ m

- At the upper rudder horn bearing:

$y_2 = -K_{11}B_2 - K_{12}B_1$ m

where

y_1, y_2	=	horizontal displacement at lower and upper rudder horn bearings, respectively	
B_1, B_2	=	horizontal support force, in kN, at lower and upper rudder horn bearings, respectively	kN
K_{11}, K_{22}, K_{12}	=	spring constant of the rudder support obtained from the following:	
K_{11}	=	$1.3\dfrac{\lambda^3}{3EJ_{1h}} + \dfrac{e^2\lambda}{GJ_{th}}$	m/kN
K_{22}	=	$1.3\left[\dfrac{\lambda^3}{3EJ_{1h}} + \dfrac{\lambda^2(d-\lambda)}{2EJ_{1h}}\right] + \dfrac{e^2\lambda}{GJ_{th}}$	m/kN
K_{12}	=	$1.3\left[\dfrac{\lambda^3}{3EJ_{1h}} + \dfrac{\lambda^2(d-\lambda)}{EJ_{1h}} + \dfrac{\lambda(d-\lambda)^2}{EJ_{1h}} + \dfrac{(d-\lambda)^3}{3EJ_{2h}}\right] + \dfrac{e^2 d}{GJ_{th}}$	m/kN
d	=	height of the rudder horn, defined in Fig. III A1-4 of this Appendix. This value is measured downwards from the upper rudder horn end, at the point of curvature transition, to the mid-line of the lower rudder horn pintle.	m
λ	=	length, as defined in Fig. III A1-4 of this Appendix. This length is measured downwards from the upper rudder horn end, at the point of curvature transition, to the mid-line of the upper rudder horn bearing. For λ = 0, the above formulae converge to those of spring constant kh for a rudder horn with 1-pintle (elastic support), and assuming a hollow cross section for this part.	m
e	=	rudder-horn torsion lever as defined in Fig. III A1-4 of this Appendix (value taken at vertical location $l_h/2$)	m
E	=	Young's modulus of the material of the rudder horn	kN/m^2
G	=	modulus of rigidity of the material of the rudder horn	kN/m^2
J_{1h}	=	moment of inertia of rudder horn about the x axis, for the region above the upper rudder horn bearing. Note that J1h is an average value over the length λ (see Fig. III A1-4 of this Appendix).	m^4
J_{2h}	=	moment of inertia of rudder horn about the x axis, for the region between the upper and lower rudder horn bearings. Note that J_{2h} is an average value over the length $d - \lambda$ (see Fig. III A1-4 of this Appendix).	m^4
J_{th}	=	torsional stiffness factor of the rudder horn	m^4
	=	$\dfrac{4F_T^2}{\sum_i \frac{u_i}{t_i}}$ for any thin wall closed section Note that the J_{th} value is taken as an average value, valid over the rudder horn height.	m^4
F_T	=	mean of areas enclosed by outer and inner boundaries of the thin walled section of rudder horn	m^2
u_i	=	length of the individual plates forming the mean horn sectional area	mm
t_i	=	thickness of the individual plates mentioned above	mm

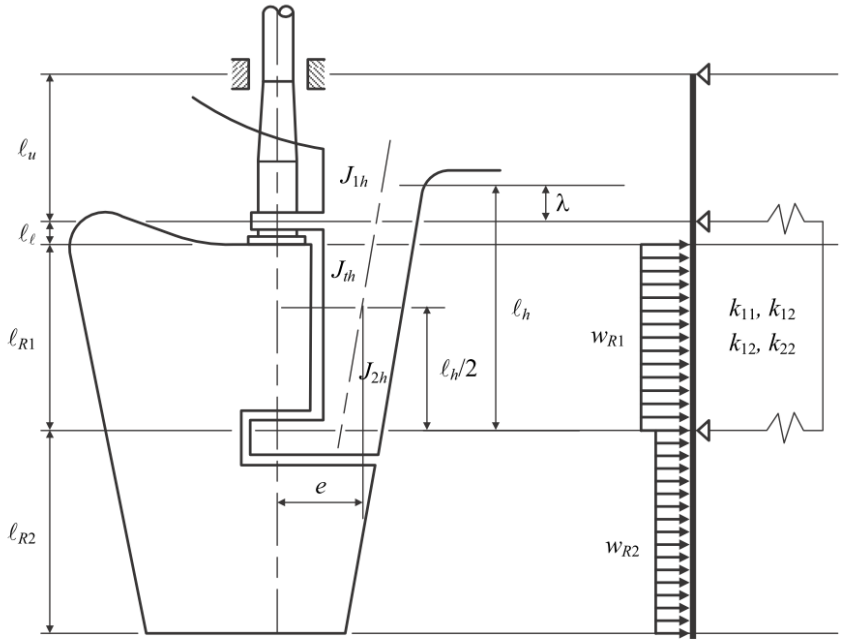

Fig. III A1-4
Rudder Supported by a Horn Arranged with Two Pintles (Supports)

Appendix 2

Guidance on Analysis of the Cross Deck Structure of a Multi-Hull Craft

Note:
This Appendix gives guidance on the analysis of a standard cross deck structure (similar to Fig. III A2-1 of this Appendix) of a multi-hulled craft. The analysis includes the determination of the craft's transverse bending stress, transverse shear stress, and the torsional stress acting on each element. The analysis of cross decks that are of advanced design or material will be specially considered.

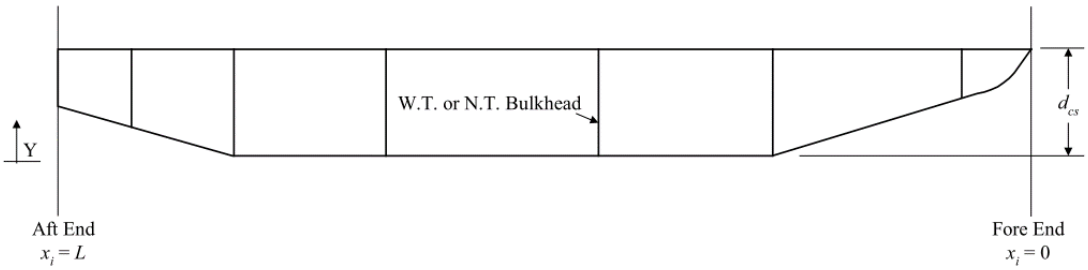

Fig. III A2-1
Typical Geometry of Centerline Section of Cross Deck

A2.1 Transverse Bending and Shear Stress

The transverse bending and shear stress of the cross structure are obtained by the following equations and are less than the allowable stresses defined in 2.1.2(c)(iii) of this Part:

$$\sigma_t = \frac{10M_{tb}}{SM_t} \qquad \text{N/mm}^2$$

$$\tau_a = \frac{10Q_t}{A_t} \qquad \text{N/mm}^2$$

where:

σ_t	=	transverse bending stress of the cross deck structure	N/mm^2
M_{tb}	=	design transverse bending moment as defined in 2.1.2(b) of this Part	kN-m
SM_t	=	offered transverse section modulus of the cross deck	cm^2-m
τ_a	=	transverse shear stress of the cross deck structure	N/mm^2
Q_t	=	design vertical shear force as defined in 2.1.2(b) of this Part	kN
A_t	=	offered shear area of the cross structure	cm^2

A2.2 Center of Torsional Rotation

$$L_c = \frac{\sum_{i=1}^{n} k_i x_i}{\sum_{i=1}^{n} k_i} \qquad \text{cm}$$

where:

k_i	=	element stiffness	
	=	$(12000E_iI_i)/L_i^3$	N/m
x_i	=	longitudinal distance from forward perpendicular	cm
n	=	total number of elements in the cross deck structure	
E	=	modulus of elasticity of the material, for each element	kN/m^2

I_i	=	moment of inertia of the element being considered	m^4
L_i	=	span of cross structure, see Fig. III A2-2 of this Appendix	m

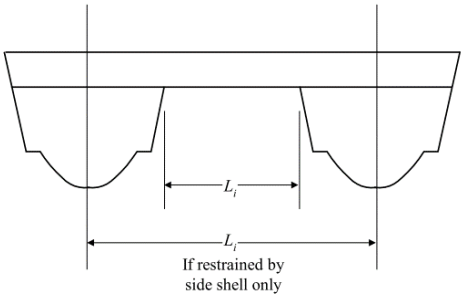

Fig. III A2-2
Typical Geometry of Centerline Section of Cross Deck

A2.3 Maximum Bending Stress on Each Element

The maximum bending stress on each element is to be less than the allowable torsional stress as defined in 2.1.2(c)(iii) of this Part.

A2.3.1 Deflection

The total amount that each element deflects can be determined by the following formula:

$$\delta_i = \frac{10^5 M_{tt} x_{ci}}{\sum_{i=1}^{n} x_{ci}^2 k_i} \qquad \text{m}$$

where:

δ_i	=	deflection of each member	m
M_{tt}	=	design torsional moment acting upon the transverse structure connecting the hulls, as determined 2.1.2(b) of this Part.	kN-m
x_{ci}	=	$x_i - L_c$	cm

x_i, L_c and k_i are as defined in A2.1 of this Appendix.

A2.3.2 Bending Moment

The bending moment that is acting on each element is determined by the following formula:

$$BM_i = \frac{P_i L_i}{2} \qquad \text{N-m}$$

where:

BM_i		bending moment that is acting on the element under consideration	N-m
P_i	=	$\delta_i k_i$, force that is acting on the element	N
L_i	=	as defined in A2.1 of this Appendix	
δ_i	=	as defined in A2.3.1 of this Appendix	
k_i	=	as defined in A2.1 of this Appendix	

A2.3.3 Maximum Stress

The maximum stress that is applied on each element can be determined by the following formula:

$$\sigma_i = \frac{1000 BM_i}{SM_i} \qquad \text{kN/m}^2$$

where:

σ_i	=	maximum stress that is acting upon the element	kN/m^2
BM_i	=	as defined in A2.3.2 of this Appendix	
SM_i	=	section modulus of the element being considered	cm^3

A2.3.4 Maximum Shear Stress on Each Element

The maximum shear stress on each element is to be less than the allowable transverse shear stress as defined in A2.3.2 of this Appendix.

$$\tau_i = \frac{10P_i}{A_{wi}} \qquad \text{kN/m}^2$$

where:

τ_i	=	maximum shear stress that is acting upon the element	kN/m^2
P_i	=	force acting upon the element, as defined in A2.3.2 of this Appendix	N
A_{wi}	=	area of the web of the element being considered	cm^2

Appendix 3

Alternative Method for the Determination of "V" Shaft Strut Requirements

A3.1 General

The method outlined below may be used as an alternative to the method given in 2.7.5 of this Part. Other alternatives may be considered providing they address loadings from unbalanced centrifugal forces from the propeller, hydrodynamic forces, inertial forces from ship motions, gravity forces from shaft and propeller, and vibrations resulting from all intended conditions.

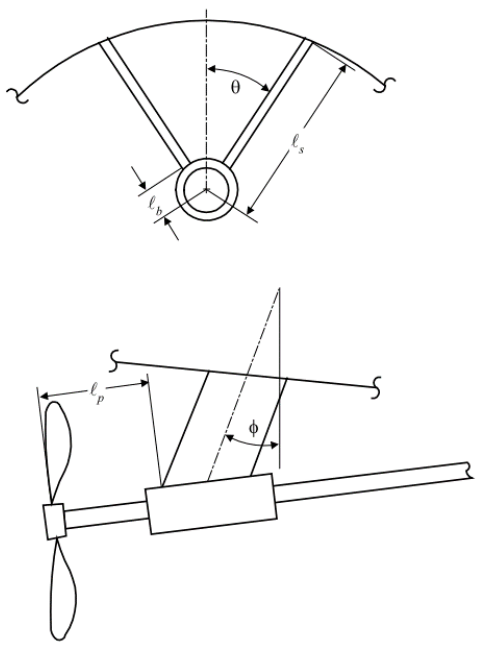

Fig. III A3-1
Strut Dimensions

A3.2 Loads and Moments Acting on Strut

The governing loads and moments acting on the shaft strut are as follows:

$$M_1 = 0.138 d_p \left[W_p l_p \left(\frac{R}{100} \right)^2 + 0.454 \frac{H_p}{V} \right] \quad \text{kN-m}$$

$$M_2 = 3.0 \times 10^{-4} S M_s \sigma_{ys} \quad \text{kN-m}$$

$$F_3 = S M_s \sigma_{ys} / d_s \quad \text{kN}$$

where

d_p	=	diameter of the propeller	m
W_p	=	weight of the propeller	kN
l_p	=	length of the overhang	m
R	=	maximum rated RPM of the shaft	

H_p	=	power at maximum rated speed	kW
V	=	maximum calm water speed of the craft	knots
SM_s	=	offered section modulus of the shaft	cm^3
d_s	=	offered diameter of the shaft	mm
σ_{ys}	=	yield strength of the shaft	N/cm^2

A3.3 Required Section Modulus of Strut at the Barrel

$$SM_{st} = 1000C_1[M + F_3(l_b sin\emptyset/1000)]/\sigma_y \qquad cm^3$$

$$C_1 = \sqrt{(C_2/sin\theta)^2 + (0.5/cos\theta)^2}$$

$$C_2 = \left[2 - \left(\frac{l_b}{l_s}\right) - \left(\frac{l_b}{l_s}\right)^2\right] \Big/ \left\{4\left[1 + \left(\frac{l_b}{l_s}\right) + \left(\frac{l_b}{l_s}\right)^2\right]\right\}$$

where

M	=	the greater of M_1 or M_2, as defined in A3.2 of this Appendix	kN-m
l_b	=	distance from center of strut barrel to the connection of the strut, see Fig. III A3-1 of this Appendix	mm
ϕ	=	cant angle of strut, see Fig. III A3-1 of this Appendix	degrees
σ_y	=	yield strength for steel struts or the welded yield strength of aluminum struts	kN/mm^2
θ	=	vee angle of strut, see Fig. III A3-1 of this Appendix	degrees
l_s	=	distance from center of strut barrel to the hull, see Fig. III A3-1 of this Appendix	mm

A3.4 Required Section Modulus of Strut at the Hull

$$SM_{st} = 1000C_1[M + F_3(l_s sin\emptyset/1000)]/\sigma_y \qquad cm^3$$

where C_1, M, F_3, l_s, ϕ and σ_y are as defined in A3.3 of this Appendix.

A3.5 Requirements for Struts Constructed of Aluminum

The required stiffness, *EI*, for aluminum strut is to be 90% of a strut constructed of CR Grade A steel that meets the requirements in A3.3 and A3.4 of this Appendix.

Appendix 4

Computer Software for Onboard Stability Calculations

A4.1 General

A4.1.1 Scope

The scope of stability calculation software is to be in accordance with the stability information as approved by the flag Administration or CR on behalf of the flag Administration. The software is at least to include all information and perform all calculations or checks as necessary to ensure compliance with the applicable stability requirements.

Approved stability software is not a substitute for the approved stability information, and is used as a supplement to the approved stability information to facilitate stability calculations.

A4.1.2 Design

The input/output information is to be easily comparable with approved stability information so as to avoid confusion and possible misinterpretation by the operator relative to the approved stability information.

An operation manual is to be provided for the onboard computer stability software.

The language in which the stability information is displayed and printed out as well as the operation manual is written is to be the same as used in the craft's approved stability information. The primary language is to be Chinese.

The onboard computer for stability calculations is to be craft specific equipment and the results of the calculations are to be only applicable to the craft for which it has been approved.

In case of modifications implying changes in the main data or internal arrangement of the craft, the specific approval of any original stability calculation software is no longer valid. The software is to be modified accordingly and reapproved.

A4.1.3 Class Notation

Ships equipped with loading computer systems designed, manufactured and tested in compliance with the requirements of this appendix, for calculation and control of stability, longitudinal and local strength, may be assigned the additional class notation **LCS**.

A4.2 Calculation Systems

This Appendix covers either system, a passive system that requires manual data entry or an active system, which replaces the manual with the automatic entry with sensors reading and entering the contents of tanks, etc., provided the active system is in the off-line operation mode. However, an integrated system, which controls or initiates actions based on the sensor-supplied inputs is not within the scope of this Appendix.

A4.3 Types of Stability Software

Four types of calculations performed by stability software are acceptable depending upon a craft's stability requirements:

A4.3.1 Type 1

Software calculating intact stability only (for craft not required to meet a damage stability criterion)

A4.3.2 Type 2

Software calculating intact stability and checking damage stability on basis of a limit curve or checking all the stability requirements (intact and damage stability) on the basis of a limit curve

A4.3.3 Type 3

Software calculating intact stability and damage stability by direct application of preprogrammed damage cases based on the relevant Conventions or Codes for each loading condition

A4.3.3 Type 4

Software calculating damage stability associated with an actual loading condition and actual flooding case, using direct application of user defined damage, for the purpose of providing operational information for safe return to port (SRtP).

Damage stability of both Type 3 and Type 4 stability software is to be based on a hull form model, that is, directly calculated from a full three-dimensional geometric model.

A4.4 Functional Requirements

A4.4.1 Calculation Program

The calculation program is to present relevant parameters of each loading condition in order to assist the Master in their judgment on whether the craft is loaded within the approval limits. The following parameters are to be presented for a given loading condition:

- Deadweight data
- Lightship data
- Trim, list
- Draft at the draft marks and perpendiculars
- Summary of loading condition displacement, VCG, LCG and, if applicable, TCG
- Downflooding angle and corresponding downflooding opening (not applicable for Type 2 software which uses limit curve for checking all the stability requirements. However, if intact stability criteria are given in addition to the limit curve, downflooding angle and the corresponding downflooding opening is to be indicated).
- Compliance with stability criteria: Listing of all calculated stability criteria, the limit values, the obtained values and the conclusions (criteria fulfilled or not fulfilled) (not applicable for Type 2 software which uses limit curve for checking all the stability requirements. However, if intact stability criteria are given in addition to the limit curve, the limit values, the obtained values and the conclusion is to be indicated).

A4.4.2 Direct Damage Stability Calculations

If direct damage stability calculations are performed, the relevant damage cases according to the applicable rules are to be pre-defined for automatic check of a given loading condition.

A4.4.3 Warning

A clear warning is to be given on screen and in hard copy printout if any of the loading limitations are not complied with.

As applicable, loading limitations are to include, but may not be limited to:

- Trim, draft, liquid densities, tank filling levels, initial heel
- Use of limit KG/GM curves in conjunction with above for Type 2

- Restrictions to the stowage height for timber where timber load lines are assigned

A4.4.4 Data Printout

The data are to be presented on screen and in hard copy printout in a clear unambiguous manner.

A4.4.5 Date and Time

The date and time of a saved calculation are to be part of the screen display and hard copy printout.

A4.4.6 Information of Program

Each hard copy printout is to include identification of the calculation program with version number.

A4.4.7 Units

Units of measurement are to be clearly identified and used consistently within a loading calculation.

A4.4.8 Computer Model

For Type 3 and Type 4 software, the system is to be pre-loaded with a detailed computer model of the complete hull, including appendages, all compartments, tanks and the relevant parts of the superstructure considered in the damage stability calculation, wind profile, down-flooding and up-flooding openings, cross-flooding arrangements, internal compartment connections and escape routes, as applicable and according to the type of stability software.

For Type 1 and Type 2 software, in case a full three dimensional model is used for stability calculations, the requirements of the computer model are to be as per the paragraph above to the extent as applicable and according to the type of stability software.

A4.4.9 Further Requirements for Type 4 Stability Software

(a) The normal (Type 1, 2 and 3) and SRtP (Type 4) software need not be “totally separated”. Where the normal and SRtP software are not totally separated:
- The function of switching between normal software and Type 4 software is to be provided.
- The actual intact loading condition is to be the same for both functions (normal operation and SRtP); and
- The SRtP module needs only to be activated in case of an incident.

Approval of Type 4 (SRtP) software is for stability only.

(b) Each internal space is to be assigned its permeability as shown below, unless a more accurate permeability has been reflected in the approved stability information.

Spaces	Permeability			
	Default	Full	Partially Filled	Empty
Container Spaces	0.95	0.70	0.80	0.95
Dry Cargo spaces	0.95	0.70	0.80	0.95
Ro-Ro spaces	0.95	0.90	0.90	0.95
Cargo liquids	0.95	0.70	0.80	0.95
Intended for consumable liquids	0.95	0.95	0.95	0.95
Stores	0.95	0.60	0.60	0.95
Occupied by machinery	0.85			
Void spaces	0.95			
Occupied by accommodation	0.95			

(c) The system is to be capable of accounting for applied moments such as wind, lifeboat launching, cargo shifts and passenger relocation.

(d) The system is to account for the effect of wind by using the method in SOLAS regulation II-1/7-2, 4.1.2 as the default, but allow for manual input of the wind speed/pressure if the on-scene pressure is significantly different (P = 120 N/m^2 equates to Beaufort 6; approximately 13.8 m/s or 27 knots).

(e) The system is to be capable of assessing the impact of open main watertight doors on stability (e.g., for each damage case provided for verification, additional damage stability calculation is to be done and presented, taking into account any watertight door located within the damaged compartment(s)).

(f) The system is to utilize the latest approved lightship weight and center of gravity information.

(g) The output of the software is to be such that it provides the master with sufficient clear unambiguous information to enable quick and accurate assessment of the stability of the vessel for any actual damage, the impact of flooding on the means of escape and the controls of devices necessary for managing and/or controlling the stability of the craft.

When the actual loading condition is input in the SRtP software, the following output (intact stability) is to be available:

- Deadweight data
- Lightship data
- Trim
- Heel
- Draft at the draft marks and perpendiculars
- Summary of loading condition displacement, VCG, LCG and, if applicable, TCG
- Downflooding angle and corresponding downflooding opening
- Free surfaces
- GM value
- GZ values relevant to an adequate range of heeling (not less than 60°) available indicatively at the following intervals: 0, 5, 10, 15, 20, 25, 30, 40, 50, 60 deg
- Compliance with relevant intact stability criteria (i.e., 2008 IS Code): listing of all calculated intact stability criteria, the limiting values, the obtained values and the evaluation (criteria fulfilled or not fulfilled)
- GM/KG limiting curve according to SOLAS, Ch II-1, Regulation 5-1

When the actual loading condition is associated to the actual damage case(s) due to the casualty, the following output (damage stability) is to be available:

- Trim
- Heel
- Draft at the draft marks and perpendiculars
- Progressive flooding angle and corresponding progressive flooding openings
- GM value
- GZ values relevant to an adequate range of heeling (not less than 60°) available indicatively at the following intervals: 0, 5, 10, 15, 20, 25, 30, 40, 50, 60 deg
- Compliance with stability criteria: listing of all calculated stability criteria, the limit values, the obtained values and the conclusions (criteria fulfilled or not fulfilled)
- The survivability criteria for Type 4 software (SRtP) are left to the discretion of the Administration
- Relevant flooding points (unprotected or weathertight) with the distance from the damage waterline to each point
- List of all flooded compartments with the permeability considered
- Amount of water in each flooded compartment

- Escape route immersion angles
- A profile view, deck views and cross-sections of the craft indicating the flooded water-plane and the damaged compartments

A4.5 Acceptable Tolerances

Depending on the type and scope of programs, the acceptable tolerances are to be determined differently, according to A4.5.1 or A4.5.2 of this Appendix. In general, deviation from these tolerances is not to be accepted unless a satisfactory explanation for the difference is submitted for review and the same is satisfactorily confirmed by CR that there would be no adverse effect on the safety of the craft.

Examples of pre-programmed input data include the following:

- Hydrostatic data: Displacement, LCB, LCF, VCB, KMt and MCT vs. draft
- Stability data: KN or MS values at appropriate heel/trim angles vs. displacement, stability limits.
- Compartment data: Volume, LCG, VCG, TCG and FSM vs. level of the compartment's contents.

Examples of output data include the following:

- Hydrostatic data: Displacement, LCB, LCF, VCB, KMt and MCT vs. draft, as well as actual drafts, trim.
- Stability data: FSC (free surface correction), GZ-values, KG, GM, KG/GM limits, derived stability criteria (e.g., areas under the GZ curve), weather criteria.
- Compartment data: Calculated Volume, LCG, VCG, TCG and FSM vs. level of the compartment's contents

The computational accuracy of the calculation program results is to be within the acceptable tolerances specified in A4.5.1 or A4.5.2 of this Appendix, of the results using an independent program or the approved stability information with identical input.

A4.5.1 Calculation Program of the Approved Stability Information

Programs which use only pre-programmed data from the approved stability information as the basis for stability calculations are to have zero tolerances for the printouts of input data.

Output data tolerances are to be close to zero. However, small differences associated with calculation rounding or abridged input data are acceptable. Additionally differences associated with the use of hydrostatic and stability data for trims that differ from those in the approved stability information are acceptable subject to review by CR.

A4.5.2 Independent Program for Assessment of Stability

Programs which use hull form models as their basis for stability calculations are to have tolerances for the printouts of basic calculated data established against either data from the approved stability information or data obtained using the approval authority's model. Acceptable tolerances shall be in accordance with Table III A4-1 below.

Table III A4-1
Acceptable Tolerances

Hull Form Dependent	Acceptable Tolerance (1)
Displacement	±2%
Longitudinal center of buoyancy, from AP	±1% or 50 cm, whichever is greater
Vertical center of buoyancy	±1% or 5 cm, whichever is greater
Transverse center of buoyancy	±0.5% of B or 5 cm, whichever is greater
Longitudinal center of flotation, from AP	±1% or 50 cm, whichever is greater
Moment to trim 1 cm	±2%
Transverse metacentric height	±1% or 5 cm, whichever is greater
Longitudinal metacentric height	±1% or 50 cm, whichever is greater
Cross curves of stability	±5 cm
Compartment Dependent	Acceptable Tolerance(1)
Volume or deadweight	±2%
Longitudinal center of gravity, from AP	±1% or 50 cm, whichever is greater
Vertical center of gravity	±1% or 5 cm, whichever is greater
Transverse center of gravity	±0.5% of B or 5 cm, whichever is greater
Free surface moment	±2%
Shifting moment	±5%
Level of contents	±2%
Trim and Stability	Acceptable Tolerance(1)
Drafts (forward, aft, mean)	±1% or 5 cm, whichever is greater
GMt (both solid and corrected for free surfaces)	±1% or 5 cm, whichever is greater
GZ values	±1% or 5 cm, whichever is greater
Downflooding angle	±2°
Equilibrium angles	±1°
Distance from WL to unprotected and weathertight openings, or other relevant point, if applicable	±5% or 5 cm, whichever is greater
Areas under righting arm curve	±5% or 0.0012 mrad

Notes:

(1) Deviation in % = [(base value – applicant's value)/base value] × 100.
Where the "base value" may be from the approved stability information or the Society's computer model.

(2) When applying a tolerance in Table III A4-1 above that contains two values, the allowable tolerance is the greater of the two values.

(3) Where differences in calculation methodology exist between the programs used in the comparison, this may be a basis for accepting deviations greater than that specified in Table III A4-1 above provided a software examination is carried out in sufficient detail to clearly document that such differences are technically justifiable.

(4) Deviation from these tolerances are not to be accepted unless CR considers that there is a satisfactory explanation for the difference and that it is clearly evident from CR's stability calculations that the deviation does not impact compliance with the required stability criteria for the craft under consideration.

A4.6 Approval Procedure

A4.6.1 Conditions of Approval of the Onboard Software for Stability Calculations

The onboard software used for stability calculations is subject to approval, which is to include:

- Verification of type approval, if any,
- Verification that the data used is consistent with the current condition of the craft (see A4.6.3 of this Appendix),
- Verification and approval of the test conditions, and
- Verification that the software is appropriate for the type of craft and stability calculations required.
- Verification that the software is installed so that failure of the primary computer or server does not prevent the stability calculation from being carried out (this is to be demonstrated onboard as noted below)
- Verification of functional requirements under A4.4 of this Appendix.

The satisfactory operation of the software for stability calculations is to be verified by testing upon installation on the primary computer or server and at least one back-up computer or redundant server onboard (see A4.6.3 of this Appendix). A copy of the approved test conditions and the operation manual for the computer/software are to be available onboard.

A4.6.2 General Approval (optional)

Upon receipt of application for general approval of the calculation program, CR may provide the applicant with test data consisting of two or more design data sets, each of which is to include a craft's hull form data, compartmentation data, lightship characteristics and deadweight data, in sufficient detail to accurately define the craft and its loading condition.

Acceptable hull form and compartmentation data may be in the form of surface coordinates for modeling the hull form and compartment boundaries (e.g., a table of offsets) or in the form of pre-calculated tabular data (e.g., hydrostatic tables, capacity tables) depending upon the form of data used by the software being submitted for approval. Alternatively, the general approval may be given based on at least two test craft agreed upon between the applicant and CR.

In general, the software is to be tested for two types of craft for which approval is requested, with at least one design data set for each of the two types. Where approval is requested for only one type of craft, a minimum of two data sets for different hull forms of that type of craft are required to be tested.

For calculation software which is based on the input of hull form data, design data sets are to be provided for three types of craft for which the software is to be approved, or a minimum of three data sets for different hull forms if approval is requested for only one type of craft. Representative craft are those types which, due to their different hull forms, typical arrangements and nature of cargo, require different design data sets.

The test data sets are to be used by the applicant to run the calculation program for the test craft. The results obtained, together with the hydrostatic data and cross-curve data developed by the program, if appropriate are to be submitted to CR for the assessment of the program's computational accuracy. CR is to perform parallel calculations using the same data sets and a comparison of these results will be made against the applicant's submitted program's results.

A4.6.3 Specific Approval

CR is to verify the accuracy of the computational results and actual craft data used by the calculation program for the particular craft on which the program will be installed.

Upon receipt of application for data verification, CR and the applicant are to agree on a minimum of 4 loading conditions, taken from the craft's approved stability information, which are to be used as the test conditions.

For craft carrying liquids in bulk, at least one of the conditions is to include partially filled tanks. Within the test conditions each compartment is to be loaded at least once. The test conditions normally are to cover the range of load drafts from the deepest envisaged loaded condition to the light ballast condition and are to include at least 1 departure and 1 arrival condition.

For Type 4 stability software for SRtP, CR is to examine at least 3 damage cases, each of them associated with at least 3 loading conditions taken from the craft's approved stability information. Output of the software is to be compared with results of corresponding load/damage case in the approved damage stability booklet or an alternative independent software source.

CR is to verify that the following data, submitted by the applicant, is consistent with arrangements and most recently approved lightship characteristics of the craft according to current plans and documentation on file with CR, subject to possible further verification onboard:

- Identification of the calculation program including version number.
- Main dimensions, hydrostatic particulars and, if applicable, the craft profile.
- The position of the forward and after perpendiculars, and if appropriate, the calculation method to derive the forward and after drafts at the actual position of the craft's draft marks.
- Craft lightweight and center of gravity derived from the most recently approved inclining experiment or light weight check.
- Lines plan, offset tables or other suitable presentation of hull form data if necessary for CR to model the craft.
- Compartment definitions, including frame spacing, and centers of volume, together with capacity tables (sounding/ullage tables), free surface corrections, if appropriate
- Cargo and Consumables distribution for each loading condition.

Verification by CR does not absolve the applicant and craft owner of responsibility for ensuring that the information programmed into the onboard computer software is consistent with the current condition of the craft and the approved stability booklet.

A4.7 Operation Manual

A simple and straightforward operation manual is to be provided, containing descriptions and instructions, as appropriate, for at least the following:

- Installation
- Function keys
- Menu displays
- Input and output data
- Required minimum hardware to operate the software
- Use of the test loading conditions
- Computer-guided dialogue steps
- List of warnings

A4.8 Installation Testing

To ensure correct working of the computer after the final or updated software has been installed, it is the responsibility of the craft's master to have test calculations carried out according to the following pattern in the presence of the Surveyor:

- From the approved test conditions at least one load case (other than lightship) is to be calculated.

  Note: Actual loading condition results are not suitable for checking the correct working of the computer.

- Normally, the test conditions are permanently stored in the computer.

Steps to be performed:

- Retrieve the test load case and start a calculation run; compare the stability results with those in the documentation.

- Change several items of deadweight (tank weights and the cargo weight) sufficiently to change the draft or displacement by at least 10%. The results are to be reviewed to ensure that they differ in a logical way from those of the approved test condition.

- Revise the above modified load condition to restore the initial test condition and compare the results. Confirm that the relevant input and output data of the approved test condition have been replicated.

- Alternatively, one or more test conditions shall be selected and the test calculation performed by entering all deadweight data for each selected test condition into the program as if it were a proposed loading. The results shall be verified as identical to the results in the approved copy of the test conditions.

A4.9 Periodical Testing

It is the responsibility of the craft's master to check the accuracy of the onboard computer for stability calculations at each Annual Survey by applying at least one approved test condition.

If the Surveyor is not present for the computer check, a copy of the test condition results obtained by the computer check is to be retained onboard as documentation of satisfactory testing for the Surveyor's verification.

At each Special Survey, this checking for all approved test loading conditions is to be done in presence of the surveyor.

The testing procedure is to be carried out in accordance with A4.8 of this Appendix.

A4.10 Other Requirements

The following features are to be provided to the software:

- Protection against unintentional or unauthorized modification of programs and data is to be provided.

- The program is to monitor operations and activate an alarm when the program is incorrectly or abnormally used.

- The program and any data stored in the system are to be protected from corruption by loss of power.

- Error messages with regard to limitations such as filling a compartment beyond capacity, or exceeding the assigned load line, etc. are to be included.

Tel: *+886 2 25062711*
Fax: *+886 2 25074722*
E-mail: *cr.tp@crclass.org*
Website: *http://www.crclass.org*
© CR – All rights reserved

CR

CR Classification Society

FOUNDED 1951

RULES FOR THE CONSTRUCTION AND CLASSIFICATION OF COAST GUARD SHIPS 2021

PART IV — MACHINERY AND SYSTEMS

August 2020

CR

CR Classification Society

FOUNDED 1951

RULES FOR THE CONSTRUCTION AND CLASSIFICATION OF COAST GUARD SHIPS 2021

PART IV － MACHINERY AND SYSTEMS

August 2020

RULES FOR THE CONSTRUCTION AND CLASSIFICATION OF COAST GUARD SHIPS 2021

PART IV MACHINERY AND SYSTEMS

CONTENTS

Chapter 1 General 1

1.1 General 1
1.2 Definitions 2
1.3 General Requirements of Machinery and Systems 5

Chapter 2 Machinery Installations, Boilers and Pressure Vessels 8

2.1 Diesel Engines Including Couplings and Reduction Gears 8
2.2 Boilers and Pressure Vessels 16
2.3 Propellers 16
2.4 Steering Gear 22
2.5 Waterjet 36
2.6 Propulsion Shafting 37
2.7 Steam and Gas Turbines 45
2.8 Propulsion and Lift Devices for Air Cushion Craft 47
2.9 Craft less than 24 meters in Length 47

Chapter 3 Piping and Pumping Systems 51

3.1 General 51
3.2 Bilge and Ballast Systems 55
3.3 Fuel Oil Systems 59
3.4 Lubricating Oil and Hydraulic Systems 61
3.5 Pneumatic Piping Systems 62
3.6 Other Piping Systems 63

Chapter 4 Electrical Installation 67

4.1 General 67
4.2 System Design of Distribution and Circuit Protection 76
4.3 Generators 89
4.4 Motors 89

4.5 Switchboards and Mounted Equipment 89
4.6 Batteries 89
4.7 Transformers 90
4.8 Cables 90
4.9 Motor Controllers 90
4.10 Accessories and Lighting Equipment 90
4.11 Main Source and Emergency Source of Electrical Power 90
4.12 Additional Requirements for Electric Propulsion Equipment 101
4.13 High Voltage Installations with Voltages above 1 kV up to 15 kV 101
4.14 Semiconductor Equipment 101
4.15 Tests after Installation on Board 101
4.16 Spare Parts 101
4.17 Uninterruptible Power System 101
4.18 Electrical Plants of less than 75 kW 102
4.19 Specialized Craft and Services 103
4.20 Craft less than 24 meters in Length 104

Chapter 5 Automatic or Remote Control and Monitoring systems 106

5.1 General Requirements 106

Chapter 6 Fire Detection and Extinction 107

6.1 All Craft 107
6.2 Craft of 500 Gross Tonnage and Over 114
6.3 Craft under 500 Gross Tonnage 125
6.4 Craft less than 24 meters in Length 126

Chapter 1
General

1.1 General

1.1.1 Application

(a) The requirements of this Part are applicable to the machinery intended for ships without special service limitations or restrictions.

(b) High speed craft

(i) The requirements of this Part are applicable to high speed craft constructed of steel, aluminum, or FRP and having $V/\sqrt{L}$ not less than 2.36 where L is as defined in 1.1.2 of Part III and V is as defined in 2.2.1(a)(iii) of Part III of the Rules. Applicable craft type and length are as follows:

Craft type	Applicable length
Mono-hull	< 130 m
Multi-hull	< 100 m
Surface effects ship	< 90 m
Hydrofoil	< 60 m

(ii) Craft which have lengths that are in excess of the above table may be classed using the requirements of the Rules for high speed craft, as applicable, providing that requirements in 2.1 and 2.2 of the Rules are verified by theoretical prediction, first principles analysis, and model testing.

(c) Vessels other than those specified in 1.1.1(b) above are to comply with the relevant requirements in Part IV through Part IX of the Rules for Steel Ships, as applicable.

(d) The Society may, however, modify the requirements in certain particular cases for their application to ships with service limitations or restrictions.

(e) The Society may give special consideration to the novel features of design in respect of the machinery based on the available information at the time.

(f) In addition to the Rules, the Society reserves the right to impose further requirements in respect of all types of machinery, where this is unavoidable due to new findings or operational experience.

1.1.2 Plans and data

The plans and data specified as below and in each chapter, as applicable for each craft to be built under survey, are to be submitted and approved before construction is commenced, in accordance with Part I of the Rules. The sizes, dimensions, welding and other details, make and size of standard approved appliances are to be shown on the plans as clearly and fully as possible.

(a) Details of dead craft start arrangements (see 1.3.4 of this Chapter)

(b) Description of all automatic trips that may affect the craft's propulsion system

(c) Windlass or winch

In addition to the plans and data as below, the applicable requirements for windlass or winch in Chapter 4 of Part IV of the Rules for Steel Ships are also to be complied with.

(i) Arrangements, details and stress calculations for the windlass or winch, drums, brakes, shaft, gears, coupling bolts, wildcat, sheaves, pulleys and foundation.

(ii) Control arrangements

(iii) Electric one-line diagram, including power ratings and cable specifications

(iv) Piping system diagram, including working pressures, welding details, material specifications and pipe specifications

1.1.3 Sea trial

(a) General

A final underway trial is to be made of all machinery, including the steering gear, anchor windlass and ground tackle. The entire installation is to be operated in the presence of the Surveyor to demonstrate its reliability and capability to function satisfactorily under operating conditions and its freedom from harmful vibrations within the operating range. The ability of the machinery to reverse the direction of thrust of the propeller from maximum ahead speed and to bring the craft to rest is to be demonstrated on sea trials to the satisfaction of the Surveyor.

All automatic controls, including trips which may affect the craft's propulsion system, are to be tested underway or alongside the pier to the satisfaction of the Surveyor.

The requirements specified in 2.1.6(b), 2.4.9(b) are also to be considered.

(b) Residual fuel

The viscosity of the fuel used on the sea trial are to be included in the classification report.

1.1.4 Units

(a) Units and formulae in this Part are shown in SI units.

(b) Pressure gauges may be calibrated in bar.

where: 1 bar = 0.1 MPa

1.2 Definitions

The terms used in this Part are defined as follows:

1.2.1 Machinery spaces of category A

Machinery spaces of category A are those spaces and trunks to such spaces which contain either: internal combustion machinery used for main propulsion; internal combustion machinery used for purposes other than main propulsion where such machinery has in the aggregate a total power output of not less than 375 kW; or any oil-fired boiler or oil fuel unit, or any oil-fired equipment other than boilers, such as inert gas generators, incinerators, etc.

1.2.2 Machinery spaces

Machinery spaces are machinery spaces of category A and other spaces containing propulsion machinery, boilers, oil fuel units, steam and internal combustion engines, generators and major electrical machinery, oil filling stations, refrigerating, stabilizing, ventilation and air conditioning machinery, and similar spaces, and trunks to such spaces.

1.2.3 Oil fuel unit

An oil-fuel unit is any equipment, such as pumps, filters and heaters, used for the preparation and delivery of fuel oil to oil-fired boilers (including incinerators, diesel engines or gas turbines at a pressure of more than 1.8 bar.

1.2.4 Accommodation spaces

Accommodation spaces are those spaces used for public spaces, corridors, lavatories, cabins, offices, hospitals, cinemas, games and hobbies rooms, barber shops, pantries containing no cooking appliances and similar spaces.

1.2.5 Public spaces

Public spaces are those portions of the accommodation which are used for halls, dining rooms, lounges and similar permanently enclosed spaces.

1.2.6 Service spaces

Service spaces are those spaces used for galleys, pantries containing cooking appliances, lockers, mail and specie rooms, storerooms, workshops other than those forming part of the machinery spaces, similar spaces and trunks to such spaces.

1.2.7 Cargo spaces

Cargo spaces are spaces used for cargo, cargo oil tanks, tanks for other liquid cargo and trunks to such spaces.

1.2.8 Special category spaces

Special category spaces are those enclosed vehicle spaces above and below the bulkhead deck, into and from which vehicles can be driven and to which passengers have access. Special category spaces may be accommodated on more than one deck provided that the total overall clear height for vehicles does not exceed 10 m.

1.2.9 Sources of ignition

Sources of ignition are considered to include a flame, arc, spark and electrical equipment, machinery and other equipment having hot surfaces with the potential of causing a non-intentional explosion or fire when exposed to an explosive or flammable atmosphere or material.

1.2.10 Essential service systems

Essential service systems are those systems necessary for the craft's survivability and safety, including:

(a) Systems for fill, transfer and service of fuel oil

(b) Fire-main systems, including emergency fire pump

(c) Other required fire-extinguishing and detection systems

(d) Bilge systems, including emergency bilge suction

(e) Ballast systems

(f) Steering systems and steering control systems

(g) Propulsion systems and their necessary auxiliaries (fuel oil, lube oil, cooling water, starting system, etc.) and control systems

(h) Systems for transfer and control of cargo

(i) Craft's service and emergency electrical generation systems and their auxiliaries (fuel oil, lube oil, cooling water, starting system, etc.) and control systems

(j) Venting and sounding systems

(k) Engine room ventilation systems

(l) Other required ventilation systems

(m) Controllable pitch propeller systems, including controls

(n) Electrical power and lighting systems

(o) Systems used for navigation

(p) Required communication and alarm systems

(q) Hydraulic systems for anchor windlass/winch

(r) Systems necessary due to special characteristics or special service of a craft

(s) Any other system deemed essential by the Society

1.2.11 Dead craft condition

Dead craft condition means a condition under which:

(a) The main propulsion plant, boilers and auxiliary machinery are not in operation due to the loss of the main source of electrical power, and

(b) In restoring propulsion, the stored energy for starting the propulsion plant, the main source of electrical power and other essential auxiliary machinery is assumed to be not available.

1.2.12 Blackout

Blackout situation means the loss of the main source of electrical power resulting in the main and auxiliary machinery to be out of operation.

1.2.13 Propeller shaft

Propeller shaft is the part of the propulsion shaft to which the propeller is fitted. It may also be called screwshaft or tailshaft.

1.2.14 Stern tube shaft

Stern Tube Shaft or Tube Shaft is the part of the propulsion shaft passing through the stern tube from the forward end of the propeller end bearing to the in-board shaft seal.

1.2.15 Intermediate shaft

Intermediate shaft is the part of the propulsion shaft in-board of the vessel.

1.2.16 Thrust shaft

Thrust Shaft is that part of the propulsion shaft which transmits thrust to the thrust bearing.

1.2.17 Oil distribution shaft

Oil distribution shaft is a hollow propulsion shaft where the bore and radial holes are used for distribution of hydraulic oil in controllable pitch propeller installations.

1.3 General Requirements of Machinery and Systems

1.3.1 Materials

(a) The requirements of 1.4 of Part IV of the Rules for Steel Ships are to be complied with, as applicable.

(b) Installation of materials which contain asbestos is prohibited.

1.3.2 Ambient reference conditions

(a) The rating for classification purposes of main and essential service auxiliary machineries intended for installation in seagoing ships to be classed for unrestricted service is to be based on a total barometric pressure of 1,000 mbar, an engine room ambient temperature or suction air temperature of 0℃ to 45℃, a relative humidity of 60% and a sea water temperature of 32℃ or, where applicable, the temperature of the charge air coolant at the inlet of 32℃. In the case of open deck location, the temperature range is to be -25℃ to 45℃. The engine manufacturer is not expected to provide simulated ambient reference conditions at a test bed.

(b) In the case of craft to be classed for restricted service, the rating is to be suitable for the temperature conditions associated with the geographical limits of the restricted service.

1.3.3 Inclinations

Machinery installations are to be designed to operate under the conditions as shown in Table IV 1-1 of the Rules for Steel Ships.

1.3.4 Dead craft start

Ship's machinery is to be so arranged that it can be brought into operation from the "Dead craft condition" as defined in 1.2.11 of this Chapter using only the facilities available on board. "Dead craft" condition is understood to mean that the entire machinery installation, including the power supply, is out of operation and that auxiliary services such as compressed air, starting current from batteries, etc., for bringing the main propulsion into operation and for the restoration of the main power supply are not available. In order to restore operation from the "dead craft" condition, an emergency generator may be used provided that it is ensured that the emergency power supply from it is available at all times. It is assumed that means are available to start the emergency generator at all times.

1.3.5 Machinery spaces

Machinery spaces are to be arranged so as to provide access to all machinery and controls as necessary for operation or maintenance.

1.3.6 Machinery space ventilation

Machinery spaces are to be ventilated so as to ensure that when machinery is operating at full power in all weather conditions, including heavy weather, an adequate supply of air is maintained for operation of the machinery and safety of the personnel.

1.3.7 Rotating machinery

Rotating machinery is to be in accordance with the requirements of Chapter 1 through Chapter 5 in this Part, as applicable.

1.3.8 Engineers' alarm

Engineers' alarms are required on craft of 500 gross tonnage and over, which are intended for international voyages. An engineers' alarm is to be operable from the main propulsion control station. It is to be audible in the engineers' accommodations. See 4.2.5(l) of Part IV of the Rules.

1.3.9 Astern propulsion power

(a) Sufficient power for going astern is to be provided to secure proper control of the craft in all normal circumstances. The astern power of the main propelling machinery is to be capable of maintaining in free route astern at least 70% of the ahead RPM corresponding to the maximum continuous ahead power. For main propulsion systems with reversing gears, controllable pitch propellers or electric propulsion drive, running astern is not to lead to overload of the propulsion machinery.

(b) Main propulsion systems are to undergo tests to demonstrate the astern response characteristics. The tests are to be carried out at least over the maneuvering range of the propulsion system and from all control positions. A test plan is to be provided by the yard and accepted by the surveyor. If specific operational characteristics have been defined by the manufacturer, these shall be included in the test plan. The ability of the machinery, including the blade pitch control system of controllable pitch propellers, to reverse the direction of thrust of the propeller in sufficient time, and so to bring the vessel to rest within a reasonable distance from maximum ahead service speed, is to be demonstrated and recorded during trials.

1.3.10 Shipboard automatic or remote control and monitoring systems

Automatic or remote control and monitoring systems associated with propulsion machinery and monitoring systems of propulsion-machinery space installed onboard classed craft are to comply with the requirements in Chapter 1 to Chapter 3 of Part VIII of Steel Ship Rules, as applicable. Additionally, where requested by the Owner and provided that compliance with Chapter 5 or Chapter 6 is met, the aforementioned systems will be assigned the optional symbols **CAU** or **CAB**, respectively. See Chapter 1 of Part VIII of Steel Ship Rules.

1.3.11 Automatic trips

A description of all automatic trips that may affect the craft's propulsion system is to be submitted for review.

1.3.12 Thrusters and dynamic positioning systems

Compliance with the applicable requirements in Chapter 4 of Part IV of the Rules for Steel Ships is required for main propulsion thrusters and is optional for propulsion-assist thrusters and athwartship thrusters. Dynamic positioning systems, including their thrusters, are to comply with Chapter 10 of Part IV of the Rules for Steel Ships.

1.3.13 Seating and fixing

(a) The machinery seating is to be of rigid construction and adequately attached to the hull. The effects of hull structure deformation on the machinery and excessive stressing due to shock and vibration as well as the thermal expansion of machinery are to be taken into account. Provision is to be made, as far as practicable, to ensure continuity between the longitudinal and transverse elements of the seating and the corresponding elements of the adjacent hull.

(b) The machinery is to be so securely bolted to the seating as to prevent any displacement due to the movements of the ship. The bedplate chock is to be of uniform fit before bolts are tightened.

(c) The accessories of machinery as well as spare parts of large dimensions are to be strongly secured so that they can not move or become loose under the movements of the ship.

1.3.14 Machinery equations

The equations for rotating parts of the machinery in the following sections are based upon strength considerations only. Their application does not relieve the manufacturer from responsibility for the presence of dangerous vibrations in the installation at speeds within the operating range. See also 2.6.6 of this Part.

1.3.15 Deck machinery and essential auxiliaries

The windlass, mooring winch, capstan, reciprocating compressor and essential service pumps are to comply with the requirements of Chapter 4 of Part IV of the Rules for Steel Ships.

Chapter 2

Machinery Installations, Boilers and Pressure Vessels

2.1 Diesel Engines Including Couplings and Reduction Gears

2.1.1 General

The requirements of this Section apply to diesel engines and reduction gears.

(a) Construction and installation

(i) Diesel engines and associated reduction gears are to be constructed in accordance with Chapter 3 and Chapter 5 of Part IV of the Rules for Steel Ships and installed in accordance with the following requirements to the satisfaction of the Surveyor.

(ii) For diesel engines driving generators, refer to the additional requirements of 4.3 of this Part.

(iii) Additional requirements for exhaust emission abatement equipment connected to diesel engines or boilers are provided in the Guidelines for Exhaust Gas Recirculation Systems, Guidelines for Selective Catalytic Reduction Systems or Guidelines for SO_x Scrubber Systems published by the Society, whichever is applicable.

(b) Piping systems, pressure vessels and heat exchangers

(i) Piping systems are to comply with the applicable requirements in Chapter 3 in addition to requirements in this section.

(ii) Pressure vessels and heat exchangers are to comply with the applicable requirements of 2.2 of this Chapter.

(c) Torsional vibration stresses

Refer to the requirements specified in 2.6.7 of this Chapter.

(d) Crankcase oil mist detection

For diesel engines of 2,250 kW maximum continuous power and above or having cylinders of more than 300 mm bore, crankcase oil mist detection arrangements are to be provided as specified in 3.4.5 of Part IV of the Rules for Steel Ships. However, in cases where alternative devices (e.g. engine bearing temperature monitors or equivalent devices) deemed appropriate by the Society are provided, such devices may be used instead of crankcase oil mist detection arrangements.

(e) Crankcase ventilation

(i) General

Provision is to be made for ventilation of an enclosed crankcase by means of a small breather or by means of a slight suction not exceeding 25 mm of water. Crankcases are not to be ventilated by a blast of air. Otherwise, the general arrangements and installation are to be such as to preclude the possibility of free entry of air to the crankcase.

(ii) Piping arrangement

Crankcase ventilation piping is not to be directly connected with any other piping system. Crankcase ventilation pipes from each engine are normally to be led independently to the weather and fitted with corrosion-resistant flame screens. However, crankcase ventilation pipes from two or more engines may lead to a common oil mist manifold.

Where a common oil mist manifold is employed, the vent pipes from each engine are to be led independently to the manifold and fitted with a corrosion-resistant flame screen within the manifold. The arrangement is not to violate the engine manufacturer's recommendations for crankcase ventilation. The common oil mist manifold is to be accessible at all times under normal conditions and effectively

vented to the weather. Where venting of the manifold to the weather is accomplished by means of a common vent pipe, the location of the manifold is to be as close as practicable to the weather such that the length of the common vent pipe is no greater than one deck height. The clear open area of the common vent pipe is not to be less than the aggregate cross-sectional area of the individual vent pipes entering the manifold. The manifold is also to be fitted with an appropriate draining arrangement.

(f) Warning notices

Suitable warning notices are to be attached in a conspicuous place on each engine and are to caution against the opening of a hot crankcase for a specified period of time after shutdown based upon the size of the engine, but not less than 10 minutes in any case. Such notice is also to warn against restarting an overheated engine until the cause of overheating has been remedied.

(g) Bedplate

The bedplate or crankcase is to be of rigid construction, oiltight, and provided with a sufficient number of bolts to secure the same to the craft's structure. The structural arrangements for supporting and securing the main engines are to be submitted for approval. Refer to 2.5.1(a)(iii) of Part III of the Rules for structural requirements. For welded construction, the requirements in Chapter 5 of Part XII of the Rules for Steel Ships are also to be considered.

(h) Couplings

(i) Flexible shaft couplings

Details of the various components of flexible couplings for main propulsion machinery and ship's service generator sets are to be submitted for approval.

(1) Design

Flexible couplings intended for use in propulsion shafting are to be of approved designs. Couplings are to be designed for the rated torque, fatigue and avoidance of overheating. Where elastomeric material is used as a torque-transmitting component, it is to withstand environmental and service conditions over the design life of the coupling, taking into consideration the full range of maximum to minimum vibratory torque. Flexible coupling design will be evaluated, based on submitted engineering analyses.

(2) Torsional displacement limiter

Flexible couplings with elastomer or spring type flexible members, whose failure will lead to total loss of propulsion capability of the craft, such as that used in the intermediate shaft of a single propeller craft, are to be provided with a torsional displacement limiter. The device is to lock the coupling or prevent excessive torsional displacement when a pre-determined torsional displacement limit is exceeded. Operation of the craft under such circumstances may be at reduced power. Warning notices for such reduced power are to be posted at all propulsion control stations.

(3) Barred range

Conditions where the allowable vibratory torque or the allowable dissipated power may be exceeded under the normal operating range of the engine are to be identified and are to be marked as a barred range in order to avoid continuous operation within this range.

(4) Diesel generators

Flexible couplings for diesel generator sets are to be capable of absorbing short time impact torque due to electrical short-circuit conditions up to 6 times the nominal torque.

(ii) Flanged couplings and coupling bolts

Refer to 2.6.5(c)(iii) for flanged couplings.

Elongation for auxiliary machinery coupling bolts made of steel having an ultimate tensile strength over 690 N/mm^2 will be subject to special consideration. Also refer to 2.6.5(c)(i) of this Chapter.

2.1.2 Plans and data

(a) Plans and data of diesel engine are to be submitted as specified in 3.2 of Part IV of the Rules for Steel Ships.

(b) Plans and data of reduction gears are to be required as specified in 5.1.2 of Part IV of the Rules for Steel Ships.

2.1.3 Starting arrangements

(a) Starting air systems

The design and construction of all air reservoirs are to be in accordance with the applicable requirements of 2.2 of this Chapter. The piping system is to be in accordance with the applicable requirements of Chapter 3 of this Part. The air reservoirs are to be so installed as to make the drain connections effective under extreme conditions of trim. Compressed air systems are to be fitted with relief valves and each air reservoir which can be isolated from a relief valve is to be provided with its own safety valves or equivalent.

All discharge pipes from starting air compressors are to be led directly to the starting air reservoirs, and all starting pipes from the air reservoirs to main or auxiliary engines are to be entirely separate from the compressor discharge piping system.

(b) Starting air capacity

Craft having main engines arranged for air starting are to be provided with at least two starting-air reservoirs of approximately equal size. The total capacity of the starting-air reservoirs is to be sufficient to provide, without recharging the air reservoirs, at least the number of starts stated below.

If other compressed air systems, such as control air, are supplied from starting air reservoirs, the capacity of the air reservoirs is to be sufficient for continued operation of these systems after the air necessary for the required number of consecutive starts has been used.

(i) Diesel propulsion

The minimum number of consecutive starts (total) required to be provided from the starting-air reservoirs is to be based upon the arrangement of the engines and shafting systems as indicated in the following table.

Type \ Quantity	1 engine	2 engines	3 or more engines
Reversible Engines	12	12 (6 per engine)	3 per engine(1)
Non-reversible Engines	6	6 (3 per engine)	3 per engine(1)

Notes:

(1) However, the total capacity is not to be less than 12 starts and need not exceed 18 starts.

For arrangements of engine and shafting systems which differ from those indicated in the table, the capacity of the starting-air reservoirs will be specially considered based on an equivalent number of starts.

(ii) Diesel-electric propulsion

The minimum number of consecutive starts C required to be provided from the starting-air reservoirs is to be determined from the following table:

No. of Diesel driven Electric Generators	1	2	3 and over
C	6	8	12

(c) Starting air compressors

For craft having diesel engines arranged for air starting, there are to be two or more air compressors, at least one of which is to be driven independently of the main propulsion unit, and the total capacity of air compressors driven independently of the main propulsion unit is to be not less than 50% of the total required.

The total capacity of the air compressors is to be sufficient to supply within one hour the quantity of the air need to satisfy 2.1.3(b) by charging the reservoirs from atmospheric pressure. The capacity is to be approximately equally divided between the number of compressors fitted, excluding an emergency compressor, where fitted.

The arrangement for dead craft air starting is to be such that the necessary air for the first charge can be produced onboard without external aid. See 1.3.4 of this Chapter.

(d) Protective devices for starting-air mains

In order to protect starting air mains against explosions arising from improper functioning of starting valves, an isolation non-return valve or equivalent is to be installed at the starting air supply connection to each engine. Where engine bores exceed 230 mm, a bursting disc or flame arrester is to be fitted in way of the starting valve of each cylinder for direct reversing engines having a main starting manifold or at the supply inlet to the starting-air manifold for non-reversing engines. The above requirement is applicable to engines where the air is directly injected into the cylinder. It is not intended to apply to engines utilizing air start motors.

(e) Electrical starting

(i) Main engine

Where the main engine is arranged for electric starting, at least two separate batteries (or separate sets of batteries) are to be fitted. The arrangement is to be such that the batteries (or sets of batteries) cannot be connected simultaneously in parallel. Each battery (or set) is to be capable of starting the main engine when in cold and ready to start conditions. The combined capacity of the batteries is to be sufficient without recharging to provide within 30 minutes the number of starts of main engines as required for air starting in 2.1.3(b), and if arranged also to supply starting for auxiliary engines, the number of starts required in 2.1.3(e)(ii). See also 2.1.3(e)(iii).

(ii) Auxiliary engine

Electric starting arrangements for auxiliary engines are to have at least two separate batteries (or separate sets of batteries) or may be supplied by separate circuits from the main engine batteries when such are provided. Where one auxiliary engine is arranged for electric starting, one battery (or set) may be accepted in lieu of two separate batteries (or sets). The capacity of the batteries for starting the auxiliary engines is to be sufficient for at least three starts for each engine.

(iii) Other requirements

The starting batteries (or set of batteries) are to be used for starting and for engine's own control and monitoring purpose only. When the starting batteries are used for engine's own control and monitoring purpose, the aggregate capacity of the batteries is to be sufficient for continued operation of such system in addition to the required number of starting capacity. Provisions are to be made to continuously maintain the stored energy at all times. See also 4.6 and 4.11.7 of this Part.

(f) Hydraulic starting

Hydraulic oil accumulators for starting the main propulsion engines are to have sufficient capacity without recharging for starting the main engines, as required in 2.1.3(b) of this Chapter.

2.1.4 Air intake and exhaust arrangements

(a) Engine air intake system

Engine air intakes are to be provided with filters to protect against damage from foreign matter.

(b) Engine exhaust systems

(i) General

All engine exhaust systems are to be adequate to carry out the designed function of the machinery and that safe operation of the craft is not put at risk. The exhaust pipes are to be water-jacketed or effectively insulated. Exhaust systems are to be so installed that the craft's structure cannot be damaged by heat from the systems. Exhaust pipes of several engines or gas turbines are not to be connected together but are to be run separately to the atmosphere unless arranged to prevent the return of gases to an idle engine or turbine.

Exhaust lines which are led overboard near the waterline are to be protected against the possibility of the water finding its way inboard. As a minimum, the highest point of the line (measured to the bottom of the pipe) is to be not less than 0.02L above the deepest seagoing draft, or to be above the deepest waterline accounting for trim (see 2.2.1(a) of Part III of the Rules), whichever is greater. The exhaust opening in the shell shall be above deepest seagoing draft. Exhaust systems are to be so arranged as to minimize the intake of exhaust gases into manned spaces, air-conditioning systems, and engine intakes. Exhaust systems are not to discharge into air-cushion intakes, where provided.

(ii) Exhaust system materials

Materials used in the exhaust system are to be resistant to saltwater corrosion, galvanically compatible to each other and resistant to exhaust products. Plate flanges will be considered where the specified material is suitable for exhaust piping pressures and temperatures.

(iii) Exhaust gas temperature

Propulsion engines with a power rating exceeding 500 kW/cylinder are to be fitted with means to display the exhaust as temperature gauge at each cylinder.

2.1.5 Fuel, lubricating and cooling arrangements

(a) Fuel oil arrangements

(i) Fuel oil pumps and oil heaters

(1) Transfer pumps
Refer to the requirements of 3.3.4 of this Part.

(2) Booster pumps

a) Standby pump, single engine installation.

An independently driven standby pump is to be provided for each service pump, booster pump and other pumps serving the same purpose.

The capacity of the pumps, with any one pump out of service, is to be sufficient for continuous operation at rated power.

b) Standby pump, multiple engine installation.

For craft fitted with two or more propulsion engines, the provision of a common standby pump (for each service pump, booster pump, etc.) capable of serving all engines sufficient for continuous operation at rated power will suffice rather than providing individual standby pumps for each engine.

c) Attached pumps.

For multiple engine installations, engines having service, booster or similar pumps attached to and driven by the engine may, in lieu of the standby pump, be provided with a complete pump carried on board as a spare. The spare pump, upon being installed, is to allow the operation of the engine at rated power.

The spare pump need not be carried, provided that, in the event of the loss of one engine, at least forty percent of the total rated propulsion power remains.

(3) Heaters
When fuel oil heaters are required for main engine operation, at least two heaters of approximately equal size are to be installed. The combined capacity of the heaters is to be not less than required to supply the main engine(s) at full power.

(ii) Fuel oil pressure piping

Pipes from booster pumps to injection systems are to be at least standard seamless steel. Pipes conveying heated oil are to be at least standard seamless or electric-resistance-welded steel (ERW). ERW pipe is to be straight seam and fabricated with no filler metal. Valves and fittings may be screwed in sizes up to and including 60 mm O.D., but screwed unions are not to be used on pressure lines in sizes 33 mm O.D. and over. Valves are to be so constructed as to permit packing under pressure.

(iii) Fuel oil injection system

(1) General

Strainers are to be provided in the fuel oil injection pump suction line.

For main propulsion engines, the arrangement is to be such that the strainers may be cleaned without interrupting the fuel supply to the engine. However, where multiple engines are provided, a dedicated simplex strainer may be fitted for each engine, provided the craft can maintain at least one-half of the design speed or seven knots, whichever is less, while operating with one engine temporarily out of service until its strainer can be cleaned.

For auxiliary engines, the arrangement is to be such that the strainers may be cleaned without undue interruption of power necessary for propulsion. Multiple auxiliary engines, each fitted with a separate strainer and arranged such that change-over to a standby unit can be accomplished without loss of propulsion capability, will be acceptable for this purpose.

Where strainers are fitted in parallel to enable cleaning without disrupting the oil supply, means are to be provided to minimize the possibility of a strainer being opened inadvertently. Strainers are to be provided with suitable means for venting when being put in operation and being depressurized before being opened. Strainers are to be so located that in the event of leakage, oil cannot be sprayed on to the exhaust manifold or surfaces with temperatures in excess of 220°C. The injection lines are to be of seamless drawn pipe. Fittings are to be extra heavy. The material used may be either steel or nonferrous, as approved in connection with the design. Also refer to 3.3 of this Part.

(2) Piping between injection pump and injectors

a) Injection piping

All external high pressure fuel delivery lines between the high-pressure fuel pumps and fuel injectors are to be protected with a jacketed piping system capable of containing fuel from a highpressure line failure. A jacketed pipe incorporates an outer pipe into which the high-pressure fuel pipe is placed, forming a permanent assembly. Metallic hose of an approved type may be accepted as the outer pipe, where outer piping flexibility is required for the manufacturing process of the permanent assembly. The jacketed piping system is to include means for collection of leakages and arrangements are to be provided for an alarm to be given of a fuel line failure.

b) Fuel oil return piping

When the peak to peak pressure pulsation in the fuel oil return piping from the injectors exceeds 20 bar, jacketing of the return pipes is also required.

c) High pressure common rail system

Where a high pressure common rail system is fitted to an engine, the high pressure common rail is to be in accordance with the requirements for pressure vessels as specified in 2.2 of this Chapter, or other recognized standards. Alternatively, the design may be verified by certified burst tests. Components are to be made of steel or cast steel. Components made of steel, other than cast steel, are to withstand not less than 4 times the maximum allowable working pressure. The cast steel common rails are to withstand not less than 5 times the maximum allowable working pressure. The use of non-ferrous materials, cast iron and nodular iron is prohibited.

The high pressure common rail system is required to be properly enclosed and provided with arrangement for leak collection and alarm in case of a failure of high pressure common rail system, see 2.1.5(a)(iii)(2)a).

(3) Piping between booster pump and injection pumps

Spray shields are to be fitted around flanged joints, flanged bonnets and any other flanged or threaded connections in fuel oil piping systems under pressure exceeding 1.8 bar which are located above or near units of high temperature, including boilers, steam pipes, exhaust

manifolds, silencers or other equipment required to be insulated, and to avoid as far as practicable oil spray or oil leakage into machinery air intakes or other sources of ignition. The number of joints in such piping systems is to be kept to a minimum.

(b) Lubricating oil systems

(i) General

The following requirements are applicable for main and auxiliary diesel engines and for reduction gears associated with diesel propulsion. See also 1.3.3 and 3.4 of this Part.

(ii) Low oil pressure alarms, temperature and level indicators

An alarm device with audible and visual signals for failure of the lubricating oil system is to be fitted for propulsion and auxiliary engines having a rated power greater than 37 kW. Such events shall also cause automatic reduction of engine speed to a safe level, but automatic shutdown shall only be activated by conditions leading to a complete breakdown, fire or explosion.

Pressure and temperature indicators are to be installed in lubricating oil systems indicating that the proper circulation is being maintained.

(iii) Drain pipes

Lubricating oil drain pipes from the sump to the drain tank are to be submerged at their outlet ends. No interconnection is to be made between the drain pipes from the crankcases of two or more engines.

(iv) Lubricating oil pumps

In cases where forced lubrication is used for propulsion engines, one independently driven standby pump is to be provided in addition to the necessary pumps for normal operation. Where the size and design of an engine is such that lubrication before starting is not necessary and an attached lubricating pump is normally used, an independently driven standby pump is not required if a complete duplicate of the attached pump is carried as a spare.

The spare pump need not be provided for multiple-engine installations provided that, in the event of the loss of one engine, at least forty percent of the total rated propulsion power remains.

(v) Filters

Oil filters are to be provided. In the case of main propulsion engines which are equipped with full-flowtype filters, the arrangement is to be such that the strainers may be cleaned without interrupting the oil supply. However, where multiple engines are provided, a dedicated simplex strainer may be fitted for each engine provided the craft can maintain at least one-half of the design speed or 7 knots, whichever is less, while operating with one engine temporarily out of service until its filter can be cleaned.

For auxiliary engines, the arrangement is to be such that the filters may be cleaned without undue interruption of power necessary for propulsion. Multiple auxiliary engines, each fitted with a separate filter and arranged such that change-over to a standby unit can be accomplished without loss of propulsion capability, will be acceptable for this purpose.

The arrangement of the valving is to be such as to avoid release of debris into the lubricating-oil system upon activation of the relieving mechanism.

Where filters are fitted in parallel to enable cleaning without disrupting the oil supply, means are to be provided to minimize the possibility of a filter under pressure being opened inadvertently. Filters are to be provided with suitable means for venting when being put in operation and being depressurized before being opened. Valves and cocks with drain pipes led to a safe location are to be used for this purpose. Filters are to be so arranged as to prevent, in the event of leakage, spraying of oil onto the exhaust manifold and surfaces with temperatures in excess of 220°C.

(vi) Lubricating-oil systems for reduction gears

Where a reduction gear is driven by a single engine and a common lubricating-oil system is used for both the engine and gear, the requirements in 2.1.5(b)(i) through 2.1.5(b)(v) are applicable.

Where a reduction gear is driven by more than one engine or any other case where a separate lubricating oil system is provided for the reduction gear, the following requirements are applicable.

(1) Pumps

Two lubricating-oil pumps are to be provided, at least one of which is to be independently driven. The capacity of each pump is to be sufficient for continuous operation of the main propulsion plant at its maximum rated power.

(2) Coolers
One or more lubricating oil coolers with means for controlling the oil temperature is to be provided together with two separate cooling water pumps, at least one of which is to be independently driven. The coolers are to have sufficient capacity to maintain the required oil temperature while the main propulsion plant is operating continuously at its maximum rated power.

(3) Indicators
Indicators are to be fitted by which the pressure and temperature of the water inlet and oil outlet may be determined. Gravity tanks are to be fitted with a low level alarm and a sight glass is to be fitted in the overflow line to the sump. Pressure systems are to be fitted with a low pressure alarm.
Sump and gravity tanks are to be provided with suitable gauges for determining the level of oil within the tank.

(4) Filters
A filter is to be provided in the lubricating-oil piping to each reduction gear. The requirements in 2.1.5(b)(v) are applicable.

(c) Cooling water systems

(i) General

Means are to be provided to ascertain the temperature of the circulating water at the return from each engine and to indicate that the proper circulation is being maintained. Drain cocks are to be provided at the lowest point of all jackets. For relief valves, see 4.3.4 of Part VI of the Rules for Steel Ships.

(ii) Sea suctions

At least two independent sea suctions are to be provided for supplying water to the engine jackets or to the heat exchangers, except that for multihull craft classed with restricted service (see 1.4.4 of Part I of the Rules), special consideration may be given. The sea suctions are to be located as to minimize the possibility of blanking off the cooling water. For multiple engine installations fitted with individual sea suctions for each engine, two means of supplying cooling water to each engine may be omitted where the craft are fitted with three or more propulsion units and can maintain half design speed with one propulsion shut down.

(iii) Strainers

Where seawater is used for direct cooling of the engines, unless other equivalent arrangements are specially approved, suitable strainers are to be fitted between the sea valves and the pump suctions. The strainers are to be either of the duplex type or otherwise arranged so they can be cleaned without interrupting the cooling water supply.

(iv) Circulating water pumps

There are to be at least two means for supplying cooling water to main and auxiliary engines, compressors, coolers, reduction gears, etc. One of these means is to be independently driven and may consist of a connection from a suitable pump of adequate size normally used for other purposes, such as a general service pump, or in the case of fresh-water circulation one of the craft's fresh-water pumps. Where, due to the design of the engine, the connection of an independent pump is impracticable, the independently driven stand-by pump will not be required if a complete duplicate of the attached pump is carried as a spare.

The spare pump need not be provided for multiple-engine installations provided that, in the event of the loss of one engine, at least forty percent of the total rated propulsion power remains.

2.1.6 Tests and trials

(a) Works trials (Factory Acceptance Test)

The works trials (Factory Acceptance Test) are to comply with the applicable requirements in 3.11 of Part IV of the Rules for Steel Ships.

(b) Shipboard Trial

The shipboard trials are to comply with the applicable requirements in 3.11 of Part IV of the Rules for Steel Ships.

Before final acceptance, the entire installation is to be operated in the presence of the Surveyor to demonstrate its ability to function satisfactorily under operating conditions and its freedom from harmful vibration at speeds within the operating range. See also 1.1.3 of this Part.

2.2 Boilers and Pressure Vessels

2.2.1 Plans and data

Arrangements and details of boilers, pressure vessels and heat exchangers required by Part V of the Rules for Steel Ships.

Plans and data for hydraulic and pneumatic power cylinders, as required by 3.4 of this Part.

2.2.2 When fitted, boilers and pressure vessels are to be designed and constructed in accordance with Part V of the Rules for Steel Ships.

2.3 Propellers

2.3.1 General

(a) Application

This section applies to propellers intended for propulsion. It covers fixed pitch and controllable pitch propellers. Performance of propellers, in respect to developing the designed output, is to be demonstrated during sea trials.

(b) Plans and data to be submitted

(i) General

For all propellers (air or water), a propeller plan giving design data and characteristics of the material.

(ii) Fixed pitch propeller of conventional design

Material

Design characteristics of propeller

Dimensions and tolerances

Propeller plan

Blade thickness calculations

(iii) Controllable pitch propellers of conventional design

As per 2.3.1(b)(ii) above.

Hub and hub to propeller shaft flange attachment bolts

Propeller blade flange and bolts

Internal mechanism

Hydraulic piping control system

Instrumentation and alarm system

Strength calculations for internal mechanism

(iv) Highly skewed propeller and other unconventional designs

For skewed propellers or propeller blades of unusual design, a detailed stress analysis, as required by 2.3.4(c) or 2.3.4(d).

In addition to the foregoing, where propeller blade designs are of the types for which the Rules do not provide simplified blade thickness calculations, such as

- Highly skewed propellers with $\theta > 50°$;
- High skewed propellers made of other than CU3 materials with $50° \geq \theta > 25°$;
- Controllable pitch propellers with $\theta > 25°$;

propeller load and stress analyses demonstrating adequacy of blade strength are to be submitted.

(v) Keyless propeller

Where propellers are to be fitted to the shaft without keys, stress calculations for hub stresses and holding capacity, along with fitting instructions, are to be submitted.

(c) Definitions

For purpose of this section, the following definitions apply.

(i) Skew angle

Skew angle (θ) of a propeller is the angle measured from ray 'A' passing through the tip of blade at mid-chord line to ray 'B' tangent to the mid-chord line on the projected blade outline. See Fig. IV 2-1.

(ii) Highly skewed propeller

A highly skewed propeller is one whose skew angle is more than 25°.

(iii) Propeller rake

(1) Rake
Rake is the distance at the blade tip between the generating line and the line perpendicular to the propeller axis that meets the generating line at the propeller axis. See Fig. IV 2-2.

(2) Rake angle (ϕ).
Rake angle of a propeller is the angle measured from the plane perpendicular to shaft centerline to the tangent to the generating line at a specified radius (0.6 × radius for the purpose of this section). See Fig. IV 2-2.

(iv) Wide tipped blade propeller

A propeller blade is to be considered as a wide tipped blade if the maximum expanded blade chord length occurs at or above 0.8R, with R being the distance measured from the centerline of the propeller hub.

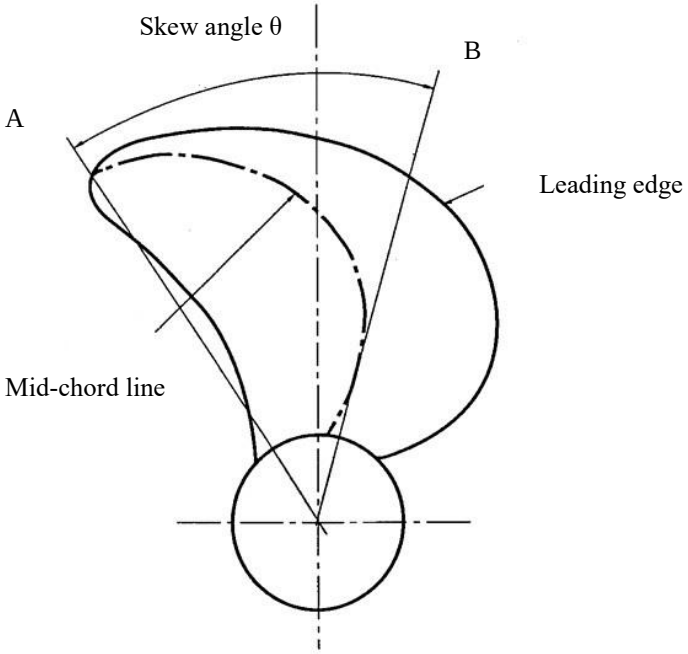

Fig. IV 2-1
Maximum Skew Angle

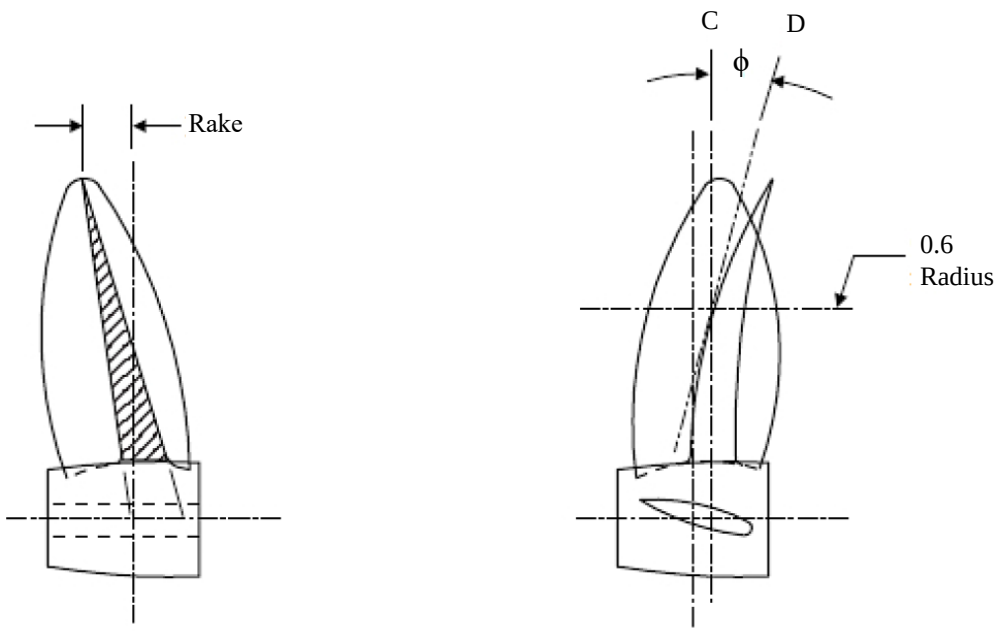

Fig. IV 2-2
Rake and Rake Angle

2.3.2 Certification

(a) Material tests

Propeller materials are to be tested in the presence of the Surveyor. See 2.3.3(c).

(b) Inspection and certification

Finished propellers are to be inspected and certified at the manufacturer's plant by the Surveyor. The blade forms, pitch, blade thickness, diameters, etc. are to be checked for conformance with approved plans. The entire surface of the finished propeller is to be examined visually and by liquid penetrant method. All finished propellers are to be statically balanced in the presence of the Surveyor. As far as practicable, reference is to be made to the provisions of ISO 484 for these purposes.

The surfaces of stainless steel propellers are to be suitably protected from the corrosive effect of the industrial environment until fitted on the craft.

2.3.3 Materials

(a) Normally used propeller materials

See 10.3 of Part XI of the Rules for Steel Ships for details of the materials. Where an alternative material specification is proposed, detailed chemical composition and mechanical properties similar to those specified in 10.3 of Part XI of the Rules for Steel Ships are to be submitted for approval.

(b) Stud materials

The material of the studs securing detachable blades to the hub is to be in accordance with Chapter 8 of Part XI of the Rules for Steel Ships.

(c) Material testing

Materials of propellers cast in one piece and materials of blades, hub, studs and other load-bearing parts of controllable pitch propellers are to be tested in the presence of the Surveyor. The requirements of material testing are specified in Part XI of the Rules for Steel Ships.

2.3.4 Design

(a) Blades of conventional design ($\theta \leq 25°$)

The required blade thickness is to be as specified in 7.2.1(a) in Part IV of the Rules for Steel Ships. For craft less than 61 m in length, however, the pitch factor k_2 used in the formula is to be 0.85 times for 0.25R section.

(b) Blades of unusual design

(i) Skewed propeller ($\theta > 25°$)

The requirements of 7.2.1(b) in Part IV of the Rules for Steel Ships are to be complied with.

However, for the following propellers, design analyses, as indicated in 2.3.4(b)(ii), are to be submitted.

(1) Propeller of of materials other than CU3 in Chapter 3 of Part XI of the Rules for Steel Ships with skew angle θ; where $25° < \theta \leq 50°$

(2) Propeller blades with skew angle $\theta > 50°$

(3) Skewed propeller ($\theta > 25°$) with wide-tip blades

(ii) Cycloidal propellers, etc., are subject to special consideration based on submittal of propeller load and stress analyses. The analyses are to include, but be not limited to the following:

- Description of method to determine blade loading;
- Description of method selected for stress analysis;
- Ahead condition is to be based on propulsion machinery's maximum rating and full ahead speed;
- Astern condition is to be based on the maximum available astern power of the propulsion machinery

(the astern power of the main propelling machinery is to be capable of 70% of the ahead RPM corresponding to the maximum continuous ahead power, as required in 1.3.9 of this Part); and is to include crash astern operation;

- Fatigue assessment; and
- Permissible stress and fatigue criteria.

(c) Blade-root fillets

Fillets at the root of the blades are not to be considered in the determination of blade thickness.

(d) Controllable pitch propellers – pitch actuation system

The required blade thickness is to be as specified in 7.2.1(d) in Part IV of the Rules for Steel Ships.

(i) Blade flange and mechanisms

The strength of the propeller blade flange and pitch changing mechanism of controllable-pitch propellers subjected to the forces from propulsion torque is to be at least 1.5 times that of the blade at design pitch conditions.

(ii) Blade pitch control

(1) Bridge control

Where the navigation bridge is provided with direct control of propulsion machinery, it is to be fitted with means to control the pitch of the propeller.

(2) Duplication of power unit

At least two hydraulic power pump units for the pitch actuating system are to be provided and arranged so that the transfer between pump units can be readily effected. For propulsion machinery spaces intended for unattended operation (**CAU**, **CAB** symbol), automatic start of the standby pump unit is to be provided.

The emergency pitch actuating system (as required by 2.3.4(d)(ii)(3)c)) may be accepted as one of the required hydraulic power pump units, provided it is no less effective.

(3) Emergency provisions

To safeguard the propulsion and maneuvering capability of the craft in the event of any single failure in either the remote pitch control system or the pitch actuating system external to the propeller shaft and oil transfer device (also known as oil distribution box), the following are to be provided:

a) Manual control of pitch at or near the pitch-actuating control valve (usually the directional valve or similar).

b) The pitch is to remain in the last ordered position until the emergency pitch actuating system is brought into operation.

c) An emergency pitch actuating system

This system is to be independent of the normal system up to the oil transfer device, provided with its own oil reservoir and able to change the pitch from full ahead to full astern.

d) Integral oil systems

Where the pitch actuating hydraulic system is integral with the reduction gear lubricating oil system and/or clutch hydraulic system, the piping is to be arranged such that any failure in the pitch actuating system will not leave the other system(s) non-operational.

e) Provisions for testing

Means are to be provided in the pitch actuating system to simulate system behavior in the event of loss of system pressure. Hydraulic pump units driven by main propulsion machinery are to be fitted with a suitable by-pass for this purpose.

f) Multiple propellers

For craft fitted with more than one controllable pitch propeller, each of which is independent of the other, only one emergency pitch actuating system (as required by 2.3.4(d)(ii)(3)c)) need be fitted, provided it is arranged such that it can be used to provide emergency pitch-changing for all propellers.

g) Hydraulic piping

Hydraulic piping is to meet the requirements of 3.4 of this Part.

(iv) Instrumentation

All controllable pitch propeller systems are to be provided with instrumentation as provided below:

(1) Pitch indicators
A pitch indicator is to be fitted on the navigation bridge. In addition, each station capable of controlling the propeller pitch is to be fitted with a pitch indicator.

(2) Monitoring
Individual visual and audible alarms are to be provided at the engine room control station to indicate hydraulic oil low pressure and high temperature and hydraulic tank low level. A high hydraulic oil pressure alarm is to be fitted if required by the proposed system design and, if fitted, is to be set below the relief valve setting.

For craft assigned with **CAU** or **CAB** symbol, see the requirements of monitoring on the navigation bridge and in the centralized control station in Part VIII of the Rules for Steel Ships.

(e) Propeller fitting

(i) Keyed fitting

For shape of the keyway in the shaft and size of the key, see 2.3.5.

(ii) Keyless fitting

The requirements of 7.3 and 7.4 of Part IV of the Rules for Steel Ships are to be complied with, as applicable.

2.3.5 Installation, tests and trial

(a) Keyed propellers

The sides of the key are to have a true fit in the keyways of the propeller hub and the shaft. See also 2.6.4(d) for propeller shaft propeller end design.

(b) Controllable pitch propellers – fit of studs and nuts

Studs, nuts and bolts are to have tight-fitting threads and are to be provided with effective means of locking. Effective sealing arrangements are to be provided in way of the bolt or stud holes against sea water ingress or oil leakage. Bolts, nuts and studs are to be of corrosion resistant materials or adequately protected from corrosion.

(c) Protection against corrosion

The exposed steel of the shaft is to be protected from the action of the water by filling all spaces between cap, hub and shaft with a suitable material. The propeller assembly is to be sealed at the forward end with a well-fitted soft-rubber packing ring. When the rubber ring is fitted in an external gland, the hub counterbore is to be filled with suitable material, and clearances between shaft liner and hub counterbore are to be kept to a minimum. When the rubber ring is fitted internally, ample clearance is to be provided between liner and hub. The rubber ring is to be sufficiently oversized to squeeze into the clearance space provided; and, where necessary, a filler piece is to be fitted in way of the propeller-hub keyway to provide a flat unbroken seating for the rubber ring.

(d) Circulating currents

Where means are provided to prevent circulating currents from passing between the propeller, shaft and the hull, a warning notice plate is to be provided in a visible place cautioning against the removal of such protection.

(e) Keyed and keyless propellers – contact area check and securing

The propeller hub to propeller shaft taper contact area is to be checked in the presence of the Surveyor. In general, the actual contact area is to be not less than 70% of the theoretical contact area. Non-contact bands extending circumferentially around the propeller hub or over the full length of the hub are not acceptable. Installation is to be in accordance with the procedure referred to in 2.3.4(e)(ii) and final pull-up travel is to be recorded. After final pull-up, propellers are to be secured by a nut on the after end of the propeller shaft.

The nut is to be secured to the propeller shaft against loosening. See also 2.6.4(d).

(f) Controllable pitch propellers – hydrostatic tests

The completed piping system of the controllable pitch propeller hydraulic system is to be hydrostatically tested at a pressure equal to 1.5 times the design pressure in the presence of the Surveyor. Relief valve operation is to be verified.

(g) Sea trial

The designed performance of the propeller at rated speed is to be demonstrated during sea trial. For controllable pitch propellers, the blade pitch control functions, from full ahead through full astern, are to be demonstrated. The emergency provisions in 2.3.4(d)(ii)(3) are also to be demonstrated.

2.4 Steering Gear

2.4.1 General

(a) Application

These requirements apply to craft which have rule-required upper rudder stock diameter less than 230 mm. Where the rule-required upper rudder stock diameter is 230 mm or above, 4.2 of Part IV of the Rules for Steel Ships are to be applied.

Where a rudder is not fitted and steering is achieved by change of setting of the propulsion units, such as the use of cycloidal, azimuthing or similar type propulsion systems, 4.6 of Part IV of the Rules for Steel Ships is to be applied.

(b) Definitions

(i) Main steering gear

Main steering gear is the machinery, rudder actuators, power units, ancillary equipment and the means of applying torque to the rudder stock (e.g., tiller or quadrant) necessary for effecting movement of the rudder for the purpose of steering the craft.

(ii) Auxiliary steering gear

Auxiliary steering gear is the equipment other than any part of the main steering gear necessary to steer the craft in the event of failure of the main steering gear, but not including the tiller, quadrant or components serving the same purpose.

(iii) Control system

Steering gear control system is the equipment by which orders are transmitted from the navigation bridge to the steering gear power actuating system. Steering gear control systems comprise transmitters, receivers, hydraulic control pumps and their associated motors, motor controllers, piping and cables required to control the steering gear power actuating system. For the purpose of the Rules, steering wheels, steering levers, and rudder angle feedback linkages are not considered to be part of the control system.

(iv) Power units

A steering gear power unit is:

(1) In the case of electric steering gears, an electric motor and its associated electrical equipment,

(2) In the case of electro-hydraulic steering gears, an electric motor and its associated electrical equipment and connected pump(s), and

(3) In the case of other hydraulic steering gears, a driving engine and connected pump(s).

(v) Power actuating system

Power actuating system is the hydraulic equipment provided for supplying power to turn the rudder stock, comprising a power unit or units together with the associated pipes and fittings and a rudder actuator. The power actuating systems may share common mechanical components (i.e., tiller, quadrant, rudder stock, or components serving the same purpose).

(vi) Rudder actuator

Rudder actuator is the component which directly converts hydraulic pressure into mechanical action to move the rudder.

(vii) Maximum working pressure

Maximum working pressure is the expected pressure in the system when the steering gear is operated to comply with 2.4.1(d).

(c) Power operation

The main steering gear is to be power-operated by one or more power units if the rule-required upper rudder stock diameter is 120 mm or greater.

Notwithstanding the above, the performance requirements stated in 2.4.1(d) and 2.4.1(e) are to be used to determine if it is necessary for the main and auxiliary steering gears to be power-operated.

(d) Main steering gear

The main steering gear is to be capable of putting the rudder from 35° on one side to 35° on the other side with the craft running ahead at maximum continuous shaft RPM and at the summer load waterline; and under the same conditions, the travel time from 35° on either side to 30° on the other side is not to be more than 28 seconds. For controllable pitch propellers, the propeller pitch is to be at the maximum design pitch approved for the above maximum continuous ahead rated RPM.

Regarding the propulsion and steering systems other than traditional arrangements for a vessel's directional control, the main steering arrangements are to be capable of changing direction of the vessel's directional control system from one side to the other at declared steering angle limits at an average rotational speed of not less than 2.3°/s with the vessel running ahead at the maximum ahead service speed.

(e) Auxiliary steering gear

The auxiliary steering gear is to be capable of putting the rudder from 15° on one side to 15° on the other side in not more than 60 seconds with the craft running ahead at half speed, or seven knots, whichever is greater.

Regarding the propulsion and steering systems other than traditional arrangements for a vessel's directional control, the auxiliary steering arrangements are to be capable of changing direction of the vessel's directional control system from one side to the other at declared steering angle limits at an average rotational speed of not less than 0.5°/s with the vessel running ahead at one half of the maximum ahead service speed or seven knots, whichever is the greater.

The auxiliary steering gear is to be so arranged that the failure of the main steering gear will not render it inoperative. Likewise, failure of the auxiliary steering gear is not to affect the main steering gear.

An auxiliary steering gear is not required under the following conditions.

(i) When the main steering gear comprises two or more power units, and is so arranged that after a single failure in its piping system or in one of the power units, the defect can be isolated so that the steering capability can be maintained or regained; and provided that

(1) For passenger craft, the main steering gear is capable of operating the rudder, as required in 2.4.1(d), while any one of the power units is out of operation; and

(2) For cargo craft, the main steering gear is to be capable of operating the rudder, as required by 2.4.1(d), while all the power units are in operation.

(ii) When the main steering gear is non-power-operated such as an orbitrol system, or consists solely of mechanical components such as sheaves, blocks, wires, chains, etc.

(f) Steering gear compartment unit location

The main and the auxiliary steering gears are to be protected from weather. The power units may be located either within or outside of the compartment containing the rudder actuators. In the event of loss of hydraulic fluid and of the need to restore the operation of the main or the auxiliary steering gear, the steering gear compartment is to be provided with handrails and gratings or other non-slip surfaces to promote suitable working conditions.

In the event of control system failure, or the need to operate the main or the auxiliary steering gear from within the steering compartment or from positions other than the navigation bridge, craft of 500 gross tonnage and above are to be provided with a means to indicate the position of the rudder at these positions where emergency steering is to be conducted.

2.4.2 Plans and data

Plans and data of the steering gear system to be submitted are as follows:

(a) Plans

(i) General arrangements of the main and auxiliary steering gears, and of the steering gear compartment.

(ii) Assembly of upper rudder stock, tiller, tie rod, rudder actuators, etc., as applicable.

(iii) Construction details of all torque-transmitting components of steering gear, such as tiller, tiller pin, tiller/rudder stock interference fit mechanism, tie rod, rudder actuator, etc., including bill of materials, welding procedures, nondestructive testing, as applicable.

(iv) Schematic hydraulic piping diagram, incorporating hydraulic logic diagram, and including bill of materials, typical pipe to pipe joint details, pipe to valve joint details, pipe to equipment joint details, pressure rating of valves and pipe fittings and pressure relief valve settings.

(v) Steering gear control system incorporating schematic electrical control logic diagram, instrumentation, alarm devices, etc., and including bill of materials.

(vi) Electrical power supply to power units and to steering gear control, including schematic diagram of motor controllers, feeder cables, feeder cable electrical protection.

(b) Data

(i) Rated torque of main steering gear.

(ii) Calculations of torque-transmitting components such as tiller, tie rod, rudder actuator, etc.

(c) For steering vanes

(i) Details and material specifications of torque transmitting parts

(ii) Airfoil analysis including vane freestream characteristics (lift and drag characteristics)

(iii) Control system arrangements

2.4.3 Materials

(a) General

All steering gear components transmitting a force to the rudder and pressure retaining components of the hydraulic rudder actuator are to be of steel or other approved ductile material. The use of gray cast iron or other material having an elongation less than 12% in 50 mm is not acceptable.

(b) Material testing

Except as modified below, materials for the parts and components mentioned in 2.4.3(a) are to be tested in the presence of the Surveyor in accordance with the requirements of Part XI of the Rules for Steel Ships.

(i) Material tests for steering gear coupling bolts and torque transmitting keys need not be witnessed by the Surveyor. Material tests for commercially supplied tie-rod nuts need not be witnessed by the Surveyor, provided the nuts are in compliance with the approved steering gear drawings and are

appropriately marked and identified in accordance with a recognized industry standard. Mill test reports for the tie-rod nuts are to be made available to the Surveyor upon request. For all non-standard tie-rod nuts, material testing is required to be performed in the presence of the Surveyor.

(ii) Material tests for forged, welded or seamless steel parts (including the internal components) and all nonferrous parts of rudder actuators that are under 150 mm in internal diameter need not be carried out in the presence of the Surveyor. Such parts are to comply with the requirements of Part XI of the Rules for Steel Ships, or such other appropriate material specifications as may be approved in connection with a particular design, and will be accepted on the basis of presentation of mill certificates to the Surveyor for verification.

2.4.4 Design

(a) Power gear stops

Power-operated steering gears are to be provided with arrangements, such as limit switches, for stopping the steering gear before the structural rudder stops (see 2.8.1(d) of Part III of the Rules) or positive mechanical stops within the steering gear are reached. These arrangements are to be synchronized with the rudder stock or position of the steering gear itself rather than with the steering-gear control system.

(b) Mechanical components

All steering gear parts transmitting force to or from the rudder, such as tillers, quadrants, rams, pins, tie rods and keys, are to be proportioned to have strength equivalent to that of the rule-required upper rudder stock diameter.

(c) Steering gear torque

(i) Minimum required rated torque

The rated torque of the steering gear is not to be less than the expected torque, as defined in 2.8.1(c) of Part III of the Rules .

(ii) Maximum allowable torque

The transmitted torque, T_{max}, of the steering gear is not to be greater than the maximum allowable torque, T_{ar}, based on the actual rudder stock diameter.

(1) Transmitted torque

The transmitted torque, T_{max}, is to be based on the relief valve setting and to be determined in accordance with the following equations:

a) For ram type actuator:

$$T_{max} = P \cdot N \cdot A \cdot L_2 / (10000 \cdot \cos^2\theta) \quad \text{kN·m}$$

b) For rotary vane type actuator:

$$T_{max} = P \cdot N \cdot A \cdot L_2 / 10000 \quad \text{kN·m}$$

c) For linked cylinder type actuator:

$$T_{max} = P \cdot N \cdot A \cdot L_2 \cdot \cos\theta / 10000 \quad \text{kN·m}$$

where

P = Steering gear relief valve setting pressure, in bar

N = Number of active pistons or vanes

A = Area of piston or vane, in mm^2

L_2 = Torque arm, equal the distance from the point of application of the force on the arm to the center of the rudder stock at 0 deg of the rudder angle, in m

θ = Maximum permissible rudder angle (normally 35 degrees)

(2) Maximum allowable torque for rudder stock
The maximum allowable torque "T_{ar}" for the actual rudder stock diameter is to be determined in accordance with the following equation:

$$T_{ar} = 2\,(D_r / 42)^3 / K_s \qquad \text{kN·m}$$

where

K_s = Material factor for rudder stock (see 2.8.1(b) of Part III of the Rules)

D_r = Actual rudder stock diameter at minimum point below the tiller or the rotor, mm

(d) Tiller

Tillers are to comply with the following requirements. All terms in the formulae are to have consistent units.

(i) Depth of the tiller hub is not to be less than the rule-required upper rudder stock diameter.

(ii) Thickness of the tiller hub is not to be less than one third of the rule-required upper rudder stock diameter.

(iii) Notwithstanding 2.4.4(d)(ii) above, the polar section modulus of the tiller hub is not to be less than:

$$0.196S^3 \frac{K_h}{K_s}$$

where

S = Rule-required upper rudder stock diameter.

K_s = Material factor of the rudder stock (see 2.8.1(b) of Part III of the Rules)

K_h = Material factor of the hub (see 2.8.1(b) of Part III of the Rules)

(iv) The shear area of the tiller key is not to be less than:

$$\frac{0.196S^3}{r} \cdot \frac{K_k}{K_s}$$

where

r = Mean radius of the rudder stock in way of the key

K_k = Material factor of the key (see 2.8.1(b) of Part III of the Rules)

S = Rule-required upper rudder stock diameter.

K_s = Material factor of the rudder stock (see 2.8.1(b) of Part III of the Rules)

(v) Bearing stress of the tiller and rudder stock keyways are not to be more than 0.9 times the material yield stress.

(vi) If the tiller is shrink-fitted to the rudder stock, preloading and stress calculations and fitting instructions are to be submitted. The calculated torsional holding capacity is to be at least two times the transmitted torque based on the steering gear relief valve setting. Preload stress is not to exceed 90% of the minimum yield strength. Maximum equivalent Von-Mises Stress is not to exceed

minimum yield strength considering all loads including preload stress and two times transmitted torque.

(vii) Section modulus of the tiller arm at any point within its length is not to be less than:

$$\frac{0.167S^3\,(L_2 - L_1)}{L_2} \cdot \frac{K_t}{K_s}$$

where

L_2 = Distance from the point of application of the force on the tiller to the center of rudder stock

L_1 = Distance between the section of the tiller arm under consideration and the center of the rudder stock

K_t = Material factor of the tiller or quadrant arm (see 2.8.1(b) of Part III of the Rules)

S = Rule-required upper rudder stock diameter.

K_s = Material factor of the rudder stock (see 2.8.1(b) of Part III of the Rules)

(viii) Split or semi-circular tiller or quadrant hubs assembled by bolting are to have bolts on each side having a total cross-sectional area not less than that given below (use a consistent system of units):

$$\frac{0.196S^3}{L_3} \cdot \frac{K_b}{K_s}$$

where

L_3 = Distance between the center of the bolts and the center of the rudder stock

K_b = Material factor of bolt (see 2.8.1(b) of Part III of the Rules)

S = Rule-required upper rudder stock diameter.

K_s = Material factor of the rudder stock (see 2.8.1(b) of Part III of the Rules)

The thickness of the bolting flange is not to be less than the minimum required diameter of the bolt.

(ix) Where the tiller is of welded construction, weld design and weld sizes are to be proportioned such that they are commensurate with the strength of the tiller.

(e) Pin

Shear area of the tiller pin is not to be less than:

$$\frac{0.196S^3}{L_2} \cdot \frac{K_p}{K_s}$$

where

K_p = Material factor of the pin (see 2.8.1(b) of Part III of the Rules)

S = Rule-required upper rudder stock diameter.

K_s = Material factor of the rudder stock (see 2.8.1(b) of Part III of the Rules)

L_2 = Distance from the point of application of the force on the tiller to the center of rudder stock

(f) Tie rod

The buckling strength of the tie rod is not to be less than:

$$\frac{0.113S^3U_R}{L_2}$$

where

U_R = Ultimate tensile strength of the rudder stock, in N/mm^2

L_2 = Distance from the point of application of the force on the tiller to the center of rudder stock

S = Rule-required upper rudder stock diameter.

(g) Rudder actuators

(i) General

Rudder actuators are to meet the requirements in 2.4.3 for materials and material tests. They are also to meet the requirements for pressure vessels in the Rules for Steel Ships, specifically 3.1, 3.2 and 3.4 of Part V of the Rules for Steel Ships (in association with S, as defined below) for design and 8.2 of Part V of the Rules for Steel Ships for hydrostatic tests. The maximum permissible stress, S, is not to exceed the lower of the following:

$$S = \frac{U}{A} \quad or$$

$$S = \frac{Y}{B}$$

where

U = Minimum specified tensile strength of material at room temperature, in N/mm^2

Y = Minimum specified yield point or yield strength, in N/mm^2

A, B = Factors as given in the following table.

Factor	Rolled or forged steel	Cast steel	Nodular cast iron
A	3.5	4	5
B	1.7	2	3

(ii) Oil seals

Oil seals between non-moving parts forming the external boundary are to be of the pressure seal type. Oil seals between moving parts forming the external pressure boundary are to be fitted in duplicate so that the failure of one seal does not render the actuator inoperative. Alternative seal arrangement may be acceptable, provided equivalent protection against leakage can be ensured.

(h) Mechanical steering gear

Where mechanical steering systems are permitted, the following are applicable.

(i) Steering chains and wire ropes

Steering chains and wire rope are to be tested as required by Chapter 13 and Chapter 14 of Part XI of the Rules for Steel Ships, respectively.

(ii) Sheaves

Sheaves are to be of ample size and so placed as to provide a fair lead to the quadrant and avoid acute angles. Parts subjected to shock are not to be of cast iron. Guards are to be placed around the sheaves to protect against injury. For sheaves intended for use with ropes, the radius of the grooves is to be equal to that of the rope plus 0.8 mm, and the sheave diameter is to be determined on the basis of wire rope

flexibility. For 6 × 37 wire rope, the sheave diameter is to be not less than 18 times that of the rope. For wire ropes of lesser flexibility, the sheave diameter is to be increased accordingly. Sheave diameters for chain are to be not less than 30 times the chain diameter.

(iii) Buffers

Steering gears other than the hydraulic type are to be designed with suitable buffer arrangement to relieve the gear from shocks to the rudder.

2.4.5 Hydraulic system

(a) Pipes, valves and fittings

Pipes, valves and fittings are to meet the requirements of 3.4 of this Part, as applicable. The design pressure of piping components subject to internal hydraulic pressure is to be at least 1.25 times the maximum working pressure of the system. Arrangements for bleeding air from the hydraulic system are to be provided, where necessary.

(b) Relief valves

Relief valves are to be provided for the protection of the hydraulic system at any part which can be isolated and in which pressure can be generated from the power source or from external forces. Each relief valve is to be capable of relieving not less than 110% of the full flow of the pump(s) which can discharge through it. With this flow condition, the maximum pressure rise is not to exceed 10% of the relief valve setting, taking into consideration increase in oil viscosity for extreme ambient conditions.

The relief valve setting is to be at least 1.25 times the maximum working pressure (see 2.4.1(b)(vii)), but is not to exceed the maximum design pressure (see 2.4.5(a)).

(c) Filtration

A means is to be provided to maintain cleanliness of the hydraulic fluid.

(d) Single failure

Where multiple power units are provided and an auxiliary steering gear is not fitted, the steering gear hydraulic system is to be designed so that after a single failure in its piping system, one of the power units, or mechanical connection to the power units, the defect can be isolated so that the integrity of the remaining part of the system will not be impaired and the steering capability can be maintained or regained. For this purpose, the piping system associated with each power unit is to be independent of that of the other units as far as practicable and connections are to be made only where necessary. Isolation valves are to be fitted, as necessary, to allow any single failure in the piping system to be isolated and the steering gear to be operated with the remaining intact part of the system. Isolation valves are to be fitted at the pipe connections to rudder actuators. Where a non-duplicated rudder actuator is employed, the isolation valves are to be mounted directly on the actuator. Piping systems are to be so arranged that transfer between power units can be readily affected.

(e) Reservoir and storage tank

All open-loop hydraulic systems are to be provided with an oil reservoir of suitable capacity. In addition, for craft of 500 gross tonnage and above, a fixed storage tank having sufficient capacity to recharge at least one hydraulic power system including the reservoir is to be provided. The tank is to be permanently connected by piping in such a manner that the system can be readily recharged from a position within the steering gear compartment.

2.4.6 Power units

If the rule-required upper rudder stock diameter is 120 mm or greater, power units are to be tested and certified in accordance with the following requirements. If the rule-required upper rudder stock diameter is less than 120 mm, and if the craft is 500 gross tonnage or greater, power units are to be tested and certified in accordance with 2.4.6(b) only.

For craft less than 500 gross tonnage, power units may be accepted based on manufacturer's guarantee for suitability for the intended purpose and subject to satisfactory functional tests after installation.

(a) Prototype test

A prototype of each new design power unit pump is to be shop-tested for a duration of not less than 100 hours. The testing is to be carried out in accordance with an approved agenda and is to include the following as a minimum.

(i) The pump and stroke control (or directional control valve) is to be operated continuously from full flow and relief valve pressure in one direction through idle to full flow and relief valve pressure in the opposite direction.

(ii) Pump suction conditions are to simulate lowest anticipated suction head. The power unit is to be checked for abnormal heating, excessive vibration or other irregularities. Following the test, the power unit pump is to be disassembled and inspected in the presence of the Surveyor.

(b) Product test

Each power unit pump is to meet the requirements of hydraulic pressure tests and shop trials in accordance with 4.7.1 and 4.7.2 of Part IV of the Rules for Steel Ships, as applicable.

2.4.7 Steering gear control system

(a) Locations of control

(i) Main steering gear

The main steering gear is to be provided with control from the navigation bridge and local control from within the steering gear compartment. However, if the power unit is located in a space other than the steering compartment, the local control is to be provided in that space instead of the steering compartment. For the purpose of local control from the steering gear compartment (or the space containing the power unit), a means is to be provided in the steering compartment (or the space containing the power unit) to disconnect any control system from the navigation bridge. Such means for disconnecting are to be operable by a single person without the need for tools.

(ii) Auxiliary steering gear

The auxiliary steering gear is to be operable from a space in which the operation of the auxiliary steering gear can be effectively carried out, or from within the steering compartment. However, if power operated, it is to be provided with control from the navigation bridge also.

(iii) Duplicate power units

Where duplicate (or more) power units are provided and an auxiliary steering gear is not fitted, two independent systems of control are to be provided. Each of these systems is to meet the requirements of the control system of the main steering gear (See 2.4.7(a)(i)). Where the control system consists of a hydraulic telemotor, a second independent system need not be fitted.

(iv) Manual Means

If the steering gear is operated by manual means only, such as by means of a steering wheel through a mechanical or a non-power-operated hydraulic system, only the requirements of 2.4.7(d) and 2.4.7(e)(i) are applicable.

(b) General

(i) Main and auxiliary steering gears

Control systems of the main and the auxiliary steering gears are to be independent of each other in all respects. The independent control systems are to meet the following requirements.

(1) Redundancy

These control systems are to be independent in all respects and are to provide on the navigation bridge all necessary apparatus and arrangements for the starting and stopping of steering gear motors and the rapid transfer of steering power and control between units.

The control cables and piping are to be separated throughout their length as widely as is practicable.
Wires, terminals and the components for duplicated steering gear control systems installed in units, control boxes, switchboards or bridge consoles are to be separated throughout their length as widely as is practicable. Where physical separation is not practicable, separation may be achieved by means of a fire retardant plate.

(2) Duplication
All electric components of the steering gear control system are to be duplicated. This does not require duplication of a steering wheel or steering lever.

(3) Steering mode selector switch
If a joint steering mode selector switch (uniaxial switch) is employed for both steering gear control systems, the connections for the circuits of the control systems are to be divided accordingly and separated from each other by an isolating plate or by air gap.

(4) Follow-up amplifier
In the case of double follow-up control, the amplifiers are to be designed and fed so as to be electrically and mechanically separated. In the case of non-follow-up control and follow-up control, the follow-up amplifiers are to be protected selectively.

(5) Additional control systems
Control circuits for additional control systems (e.g., steering lever or autopilot) are to be designed for all-pole disconnection.

(6) Feed-back units and limit switches
The feed-back units and limit switches, if any, for the steering gear control systems are to be separated electrically and mechanically connected to the rudder stock or actuator separately.

(7) Hydraulic control components
Hydraulic system components in the power actuating or hydraulic servo systems controlling the power systems of the steering gear (e.g., solenoid valves, magnetic valves) are to be considered as part of the steering gear control system and shall be duplicated and separated.
Hydraulic system components in the steering gear control system that are part of a power unit may be regarded as being duplicated and separated when there are two or more separate power units provided and the piping to each power unit can be isolated.

(ii) Duplicate power units

If the main steering gear consists of duplicated (or more) power units and an auxiliary steering is not fitted, the two independent means of control are to comply with the requirements of 2.4.7(a)(i).

(iii) Single power units

If the main steering gear consists of a single power unit and the auxiliary steering gear is not power operated, only one control system for the main steering gear need be provided.

(iv) Computer-based systems

Steering control systems that are computer-based systems are to comply with 2.7 of Part VIII of the Rules for Steel Ships.

(v) System response under failure

The failures (as listed, but not limited to items in 2.4.7(e)) likely to cause uncontrolled movements of rudder are to be clearly identified. In the event of detection of such failure, the rudder should stop in the current position. Alternatively, the rudder may be set to return to the midship/neutral position. Failure Mode and Effect Analysis methodology may be used to identify the failures.

(c) Control system power supply

Electrical power for the steering gear control system is to be derived from the motor controller of the power unit that it is controlling, or from the main switchboard at a point adjacent to the supply to the power unit.

(d) Communication

A means of communication is to be provided between the navigation bridge and all other locations where steering can be effected, such as the steering gear compartment, the space where the power units are located and the space where auxiliary steering gear is to be operated, as applicable.

(e) Instrumentation and alarms

The following instruments and alarms are to be provided. The audible and visual alarms are to have provisions for testing.

(i) Rudder position indicator

The angular position of the rudder is to be indicated on the navigation bridge and all other locations where steering can be effected, such as the steering gear compartment, the space where the power units are located and the space where auxiliary steering gear is to be operated, as applicable. The rudder angle indication is to be independent of the steering gear control system.

(ii) Autopilot

Where autopilot is fitted, a visual and audible alarm is to be provided on the navigation bridge to indicate its failure.

Where a power unit is provided and steering is controlled from navigation bridge, the following are applicable:

(iii) Motor alarm

A visual and audible alarm is to be given on the navigation bridge and the engine room control station to indicate an overload condition of the steering gear power unit motor. Where three phase electrical power is used, a visual audible alarm is to be installed which indicates failure of any one of the supply phases. The operation of these alarms is not to interrupt the circuit.

(iv) Motor running indicators

Indicators for running indication of motors are to be installed on the navigation bridge and the engine room control station.

(v) Power failure

A visual and audible alarm is to be given on the navigation bridge and engine room control station to indicate a power failure to any one of the steering gear power units.

(vi) Control power failure

A visual and audible alarm is to be given on the navigation bridge and the engine room control station to indicate an electrical power failure in any steering gear control circuit or remote control circuit.

In addition, hydraulic power operated steering gear is to be provided with the following:

(vii) Low oil level alarm

A visual and audible alarm is to be given on the navigation bridge and engine room control station to indicate a low oil level in any power unit reservoir. The operation of this alarm is not to interrupt the power supply circuit.

(viii) Hydraulic lock

Where the arrangement is such that a single failure may cause hydraulic lock and loss of steering, an audible and visual hydraulic lock alarm which identifies the failed system or component is to be provided on the navigation bridge. The alarm is to be activated upon steering gear failure if:

- Position of the variable displacement pump control system does not correspond to the given order, or
- Incorrect position of the 3-way full flow valve or similar in the constant delivery pump system is detected.

Alternatively, an independent steering failure alarm for follow-up control systems complying with the following requirements may be provided in lieu of a hydraulic lock alarm.

Where an independent steering failure alarm is installed for follow-up control systems it is to comply with the following:

(1) The steering failure alarm system is to actuate an audible and visible alarm in the wheelhouse when the actual position of the rudder differs by more than 5 degrees from the rudder position ordered by the follow-up control systems for more than:

- 30 seconds for ordered rudder position changes of 70 degrees;
- 6.5 seconds for ordered rudder position changes of 5 degrees; and

The time period calculated by the following formula for ordered rudder positions changes between 5 degrees and 70 degrees:

$$t = (R/2.76) + 4.64$$

where:

t = Maximum time delay, in seconds.

R = Ordered rudder change, in degree.

(2) The steering failure alarm system must be separate from, and independent of, each steering gear control system, except for input received from the steering wheel shaft.

(3) Each steering failure alarm system is to be supplied by a circuit that:

a) Is independent of other steering gear system and steering alarm circuits.

b) Is fed from the emergency power source through the emergency distribution panel in the wheelhouse, if installed; and

c) Has no overcurrent protection except short circuit protection

(ix) Autopilot override

(1) Steering gear systems provided with an autopilot system are to have a device at the primary steering station to completely disconnect the autopilot control to permit change-over to manual operation of the steering gear control system. A display is to be provided at the steering station to ensure that the helmsman can readily and clearly recognize which mode of steering control (autopilot or manual) is in operation.

(2) In addition to the change-over device as in 2.4.7(e)(ix)(1), for primary steering stations, where fitted with an automatic autopilot override to change-over from autopilot control to manual operation, the following are to be provided.

a) The automatic override of the autopilot is to occur when the manual helm order is 5 degrees of rudder angle or greater.

b) An audible and visual alarm is to be provided at the primary steering station in the event that the automatic autopilot override fails to respond when the manual helm order is 5 degrees of rudder angle or greater. The alarm is to be separate and distinct from other bridge alarms and is to continue to sound until it is acknowledged.

c) An audible and visual alarm that is immediately activated upon automatic autopilot override actuation is to be provided at the primary steering station. The alarm is to be distinct from other bridge alarms and is to continue to sound until it is acknowledged.

The following instrumentation and alarms are to be provided.

(x) Loop failures

A visual and audible alarm is to be given on the navigation bridge to indicate a loop failure.

Note: Monitoring is to be provided for short circuit, broken connections and earth faults for command and feedback loops. Monitoring for loop failures is not required, when a steering failure alarm system is provided. See 2.4.7(e)(viii)(1), (2), (3) above.

(xi) Computer-based system failures

For steering control systems that are computer-based systems, a visual and audible alarm is to be given on the navigation bridge to indicate a computer-based system failure.

Note: Monitoring is to be provided for data communication errors, computer hardware failures and software failure. See also 2.3 and 2.7 of Part VIII of the Rules for Steel Ships. Monitoring for computer-based system failures is not required, when a steering failure alarm system is provided. See 2.4.7(e)(viii)(1), (2), (3) above .

(xii) Earth fault

A visual and audible alarm is to be given on the navigation bridge to indicate an earth fault on AC and DC circuits.

(xiii) Deviation

Where arrangements discussed in 2.4.7(e)(viii) ~ 2.4.7(e)(xi) above can lead to reduced or erroneous system performance of the commanded change in rudder angle, a deviation alarm visible and audible at the navigating bridge shall be initiated if the rudder's actual position does not reach the set point within acceptable time limits for the closed loop control systems (e.g., follow-up control, computer based systems, and autopilot). Deviation alarm may be caused by mechanical, hydraulic or electrical failures. See 2.4.7(e)(viii) ~ 2.4.7(e)(xi) above for acceptable time limits or angle deviations, as applicable.

(f) Operating instructions

Appropriate operating instructions with a block diagram showing the change-over procedures for steering control systems and steering gear power units are to be permanently posted at a conspicuous location on the navigation bridge and in or near the steering gear compartment. Where system failure alarms in 2.4.7(e)(viii) are provided, appropriate instructions are to be permanently posted on the navigation bridge to shut down the failed system.

2.4.8 Electrical power supply

Electrical power circuits are to meet the requirements of 4.2.3 and 4.11.4(f)(v) of this Part.

2.4.9 Testing and trials

(a) Testing of piping system

The following tests are to be performed in the presence of the Surveyor.

(i) Shop tests

After fabrication, each component of the steering gear piping system, including the power units, hydraulic cylinders and piping, is to be hydrostatically tested at the plant of manufacture to 1.5 times the relief valve setting.

(ii) Installation tests

After installation in the craft, the complete piping system, including power units, hydraulic cylinders and piping, is to be subjected to a hydrostatic test equal to 1.1 times the relief valve setting, including a check of the relief valve operation.

(b) Trials

The steering gear is to be tried out on the trial trip in order to demonstrate to the Surveyor's satisfaction that the requirements of the Rules have been met. The trial is to include the operation of the following:

(i) The main steering gear, including demonstration of the performance requirements of 2.4.1(d) or with the rudder fully submerged. Where full rudder submergence cannot be obtained in ballast conditions, steering gear trials are to be conducted at a displacement as close as reasonably possible to full-load displacement as required by Section 6.1.2 of ISO 19019:2005 on the conditions that either:

(1) The rudder is fully submerged (zero speed waterline) and the craft is in an acceptable trim condition.

(2) The rudder load and torque at the specified trial loading condition have been predicted (based on the system pressure measurement) and extrapolated to the full load condition using the following method to predict the equivalent torque and actuator pressure at the deepest seagoing draft:

$Q_F = Q_T \bullet \alpha$

$$\alpha = 1.25\left(\frac{A_F}{A_T}\right)\left(\frac{V_F}{V_T}\right)^2$$

where

α = Extrapolation factor

Q_F = Rudder stock moment for the deepest service draft and maximum service speed condition

Q_T = Rudder stock moment for the trial condition

A_F = Total immersed projected area of the movable part of the rudder in the deepest seagoing condition

A_T = Total immersed projected area of the movable part of the rudder in the trial condition

V_F = Contractual design speed of the craft corresponding to the maximum continuous revolutions of the main engine at the deepest seagoing draft

V_T = Measured speed of the craft (considering current) in the trial condition

Where the rudder actuator system pressure is shown to have a linear relationship to the rudder stock torque, the above equation can be taken as:

$P_F = P_T \cdot \alpha$

where

P_F = Estimated steering actuator hydraulic pressure in the deepest seagoing draft condition

P_T = Maximum measured actuator hydraulic pressure in the trial condition

Where constant volume fixed displacement pumps are utilized, the requirements can be deemed satisfied if the estimated steering actuator hydraulic pressure at the deepest draft is less than the specified maximum working pressure of the rudder actuator. Where a variable delivery pump is utilized, pump data should be supplied and interpreted to estimate the delivered flow rate that corresponds to the deepest seagoing draft in order to calculate the steering time and allow it to be compared to the required time.
Where A_T is greater than $0.95A_F$, there is no need for extrapolation methods to be applied.

(3) Alternatively the designer or builder may use computational fluid dynamic (CFD) studies or experimental investigations to predict the rudder stock moment at the full sea going draft condition and service speed. These calculations or experimental investigations are to be to the satisfaction of the Society.

In any case for the main steering gear trial, the speed of the craft corresponding to the number of maximum continuous revolution of main engine and maximum design pitch applies.

(ii) The auxiliary steering gear, if required, including demonstration to the performance requirements of 2.4.1(e) and transfer between main and auxiliary steering gear.

(iii) The power units, including transfer between power units.

(iv) The emergency power supply required by 4.11.4(f)(v) of Part IV of the Rules.

(v) The steering gear controls, including transfer of control and local control.

(vi) The means of communications, as required by 2.4.7(d).

(vii) The alarms and indicators required by 2.4.7(e) (test may be done at dockside).

(viii) The storage and recharging system contained in 2.4.5(e) (test may be done at dockside).

(ix) The isolating of one power actuating system and checking for regaining steering capability are required by 2.4.5(d), if applicable (test may be done at dockside).

(x) Where the steering gear is designed to avoid hydraulic locking, this feature is to be demonstrated.

2.5 Waterjet

2.5.1 General

Full details are to be submitted for the force transmitting parts of waterjet units, including material specifications.

(a) The units are to be manufactured under Surveys.

(b) Mill certificates are to be provided for the components of the steering section.

(c) The material tests for the impellers, shafts and couplings are to be witnessed by the Surveyor.

(d) Hydraulic cylinders are to be manufactured and inspected in accordance with the requirements of 3.4.5 of this Part.

(e) The use of galvanically dissimilar metallic materials is to be considered in the Waterjet design.

2.5.2 Design

Design basis stress calculations for the impellers, shafting, steering mechanism and reversing mechanism are to be submitted to substantiate the suitability and strength of component parts for the intended service. For the purpose of design review, the stress calculations are to cover the worst case condition for each component. The factor of safety for the above components is not to be less than 2.0 when determined by the following equation:

$$\frac{1}{F_S} = \frac{\sigma_S}{S_T} + \frac{\sigma_a}{E}$$

nor less than 4.0 when determined by the following equation:

$$F_S = \frac{S_T}{\sigma_S}$$

where

F_S = Factor of safety

σ_S = Steady stress of low cycle alternating stress

σ_a = Alternating stress

S_T = Ultimate tensile strength of material

E = Corrected fatigue strength of material (based on 10^8 cycles)

2.5.3 Housings

Calculations or test results to substantiate the suitability and strength of the pressure and suction housing are to be submitted for review. The condition with the inlet of the suction blocked is also to be considered. A factor of safety of not less than four based on the ultimate tensile strength of the material (or two based on the yield strength) is to be maintained at each point in the housing. Housing are to be hydrostatically tested to 1.5 times the maximum working pressure or to 3.4 bar, whichever is greater.

2.5.4 Reversing mechanisms

Astern thrust is to be provided in sufficient amounts to secure proper control of the craft in all normal circumstances. The reversing mechanism is to provide for reversing at full power.

2.5.5 Impeller bearings

Antifriction bearings are to have a B10 life of at least 80,000 hours.

Note: B10 life means an expected time at which 10% of the population of a product will have failed.

2.5.6 Monitoring and alarms

In addition to the requirements of 2.4.7(e) of this Chapter, alarms and monitoring requirements are indicated as follows:

(a) An indication of the angular position of the nozzle is to be provided at each station from which it is possible to control the direction of thrust from the units.

(b) An indication of both the required and actual reversing bucket position is to be provided at each station from which it is possible to control the reversal of thrust.

(c) All alarms associated with waterjet unit faults are to be indicated individually at the control stations and in accordance with the following table and the alarm system specified in 2.4.7(e) of this Chapter.

Item	Alarm	Note
Hydraulic system pressure	Low	
Hydraulic oil supply tank level	Low	
Hydraulic oil temperature	High	Where an oil cooler is fitted
Lubricating oil temperature	High	
Lubricating oil pressure	Low	In forced lubrication systems
Lubricating oil tank level	Low	Where a tank is provided
Ratio of jet RPM/vessel speed	High	Only if installed power per jet > 4 MW
Control system failure	Fault	Includes follow-up failure of steering or reversing system
Control system power supply	Failure	

2.6 Propulsion Shafting

2.6.1 General

The construction of the propellers and propulsion shafting is to be carried out in accordance with the following requirements and to the satisfaction of the Surveyor.

2.6.2 Plans and data to be submitted

(a) Detailed plans with material specifications of the propulsion shafting, couplings, coupling bolts, propulsion shafting arrangement, propeller shaft bearings and lubrication system, if oil-lubricated

(b) Calculations for flexible couplings and demountable couplings (see 2.1.1(h) and 2.6.5(c)(v) of this Part)

(c) Shaft alignment and vibration calculations, if required by 2.6.7

(d) Detailed preloading and stress calculations and fitting instructions for non-fitted coupling bolts (see 2.6.5(c)(ii))

(e) Thrust plate calculations

2.6.3 Materials and testing

(a) Materials

Materials for propulsion shafts, couplings and coupling bolts, keys and clutches are to be of forged steel or rolled bars, as appropriate, in accordance with Chapter 8 of Part XI of the Rules for Steel Ships or other specifications as may be specially approved with a specific design. Where materials other than those specified in the Rules are proposed, full details of chemical composition, heat treatment and mechanical properties, as appropriate, are to be submitted for approval.

(i) Ultimate tensile strength

In general, the minimum specified ultimate tensile strength of steel used for propulsion shafting is to be between 400 N/mm^2 and 930 N/mm^2.

(ii) Elongation

Carbon steel with elongation ($L_0/d = 4$) of less than 16% or ($L_0/d = 5$) of less than 15% is not to be used for any shafting component, with the exception that material for non-fitted alloy steel coupling bolts manufactured to a recognized standard may have elongation ($L_0/d = 4$) of not less than 10% or ($L_0/d = 5$) of not less than 9%.

Alloy steels with elongation less than ($L_0/d = 4$) 16% or ($L_0/d = 5$) 15% may be applied subject to approval.

(b) Material tests

(i) General

Materials for all torque-transmitting parts, including shafts, clutches, couplings, coupling bolts and keys are to be tested in the presence of the Surveyor. The materials are to meet the specifications of Chapter 8 of Part XI of the Rules for Steel Ships or other specifications approved in connection with the design.

(ii) Alternative test requirements

Materials for shafting, couplings and coupling bolts transmitting 373 kW or less will be accepted based on the manufacturer's certified mill tests and hardness check witnessed by the Surveyor. Bolts manufactured to a recognized standard and used as coupling bolts will not require material testing.

(c) Inspection

Shafting and couplings are to be surface-examined at the manufacturer. Propeller shafts in the finished machine condition are to be subjected to a nondestructive examination such as magnetic particle, dye penetrant or other nondestructive methods and are to be free of linear discontinuities greater than 3.2 mm, except that in the following locations, the shafts are to be free of all linear discontinuities:

(i) Tapered propeller shafts

The forward one-third length of the taper, including the forward end of any keyway and an equal length of the parallel part of the shaft immediately forward of the taper.

(ii) Flanged propeller shafts

The flange fillet area.

(d) Weldability

The carbon content of the steel used for propeller shafts is be in accordance with Chapter 8 of Part XI of the Rules for Steel Ships.

2.6.4 Design and construction

(a) Shaft diameters

The least diameter of propulsion shafting is to be determined by the following equation:

$$D = 100K \cdot \sqrt[3]{\frac{Hc_1}{N(S + c_2)}}$$

where

c_1 = 560 for single screw craft 45.7 m in length and over and multiple screw craft 61 m in length and over.

= 416.4 for single screw craft below 45.7 m and multiple screw craft below 61 m.

c_2 = 160

D = Greater of the required solid shaft diameter as required by 2.6.4 or 2.6.7 (reflective of static and dynamic stresses), except hollow shaft, in mm.

K = Shaft design factor (see Table IV 2-1 and Table IV 2-2)

H = Power at rated speed, in kW.

N = RPM at rated speed

S = Minimum specified ultimate tensile strength of the material, in N/mm^2. For calculation purposes, S is not to be taken as more than the following:

= 415 N/mm^2 for carbon, and alloy steel propeller shafts fitted with saltwater lubricated bearings and non-continuous shaft liners.

= 600 N/mm^2 for carbon, alloy and austenitic stainless steel propeller shafts fitted with oil lubricated bearings or with continuous shaft liners or equivalent.

= 930 N/mm^2 for other shaft sections and for propeller shafts manufactured of age-hardened martensitic stainless steels, higher-strength austenitic stainless steels such as ASTM Type XM-19, XM-21, or XM-28, or other high strength alloy materials.

Notes:

In general, the minimum specified ultimate tensile strength of steel used for propulsion shafting is to be between 400 N/mm^2 and 930 N/mm^2. See also 2.6.3(a).

Table IV 2-1
Shaft Design Factor K for Intermediate Shafts, Thrust Shafts, and Oil Distribution Shafts

	Design Features(1)							
	Integral Flange	Shrink Fit Coupling	Keyways(2)	Radial Holes, Transverse Holes(3)	Longitudinal Slots(4)	On Both Sides of Thrust Collars	In way of Axial Bearings used as Thrust Bearings	Straight Sections
Turbine	0.95	0.95	1.045	1.045	1.14	1.045	1.045	0.95
Electrics Devices								
Diesel Drives through slip couplings (electric or hydraulic)								
All Other Diesel Drives	1.0	1.0	1.1	1.1	1.2	1.1	1.1	1.0

Notes:

(1) Geometric features other than those listed will be specially considered.

(2) After a length of not less than 0.2D from the end of the keyway, the shaft diameter may be reduced to the diameter calculated for straight sections. Fillet radii in the transverse section of the bottom of the keyway are to be not less than 0.0125D.

(3) Diameter of bore not more than 0.3D.

(4) Length of the slot not more than 1.4D, width of the slot not more than 0.2D, whereby D is calculated with k = 1.0.

Table IV 2-2
Shaft Design Factor K for Propeller shafts and Stern Tube Shafts(1)

Propulsion Type	Stern Tube Configuration	Propeller Attachment Method(2)			
		Keyed(3)	Keyless Attachment by Shrink Fit(4)	Flanged(5)	Stern Tube Shafts(6), (7)
All	Oil-lubricated bearings	1.26	1.22		1.15
All	Water-lubricated bearings with continuous shaft liners or equivalent				
All	Water-lubricated bearings with non-continuous shaft liners	1.29	1.25		1.18

Notes:

(1) The propeller shaft diameter may be reduced to the stern tube shaft diameter forward of the bearing supporting the propeller, and the stern tube shaft diameter reduced to the intermediate shaft diameter inboard of the forward stern tube seal.

(2) Other attachments are subject to special consideration.

(3) Fillet radii in the transverse section at the bottom of the keyway are not to be less than 0.0125D.

(4) See also 2.6.4(d).

(5) The fillet radius in the base of the flange for the propeller shaft supporting the propeller is to be at least 0.125D. Special consideration will be given to fillets of multiple radii design. The fillet radius is to be accessible for nondestructive examination during propeller shaft surveys. See 2.3.1(b) of Part I of the Rules and 2.3.7 of Part I of the Rules for Steel Ships. For other fillet radii, see 2.6.5(c)(iii).

(6) K factor applies to shafting between the forward edge of the propeller-end bearing and the inboard stern tube seal.

(7) Where keyed couplings are fitted on stern tube shaft, the shaft diameters are to be increased by 10% in way of the coupling. See Note (2) of Table IV 2-1.

(b) Hollow shafts

For hollow shafts where the bore exceeds 40% of the outside diameter, the minimum shaft diameter is not to be less than that given by the following equation:

$$D_o = \mathrm{D} \cdot \sqrt[3]{\frac{1}{1 - (D_i/D_o)^4}}$$

where

D_o = Required outside diameter, in mm.

D = Solid shaft diameter required by 2.6.4, as applicable, in mm.

D_i = Actual shaft bore, in mm.

(c) Key

In general, the key material is to be of equal or higher strength than the shaft material. The effective area of the key in shear is to be not less than A, given below. The effective area is to be the gross area subtracted by materials removed by saw cuts, set screw holes, chamfer, etc., and is to exclude the portion of the key in way of spooning of the keyway.

$$\mathrm{A} = \frac{D^3}{5.1 r_m} \cdot \frac{Y_S}{Y_K}$$

where

A = Shear area of key, in mm^2.

D = Intermediate shaft diameter, mm, as determined by 2.6.4(a).

r_m = Shaft radius at mid-length of the key, in mm.

Y_S = Specified yield strength of shaft material, in N/mm^2.

Y_K = Specified yield strength of key material, in N/mm^2.

(d) Propeller shaft end design

Propeller shafts are to be provided with an accurate taper fit in the propeller hub, particular attention being given to the fit at the large end of the taper.

(i) Keyed

The key is to fit tightly in the keyway and be of sufficient size to transmit the full torque of the shaft, but it is not to extend into the liner counterbore on the forward side of the hub. The forward end of the keyway is to be so cut in the shaft as to give a gradual rise from the bottom of the keyway to the surface of the shaft.

Ample fillets are to be provided in the corners of the keyway and, in general, stress concentrations are to be reduced as far as practicable.

(ii) Keyless

Where propellers are fitted without keys, detailed stress calculations and fitting instructions are to be submitted for review. See 2.3.4(e)(ii).

2.6.5 Shafting accessories

(a) Propeller shaft liners

(i) Thickness at bearings

(1) Bronze liner

The thickness of bronze liners to be fitted to propeller shafts or tube shafts is not to be less than that given by the following equation:

$$t = T/25 + 5.1 \quad \text{(mm)}$$

where

t	=	Thickness of liner	mm
T	=	Required diameter of propeller shaft	mm

(2) Stainless steel liner

The thickness of stainless steel liners to be fitted to propeller shafts or tube is not to be less than one-half that required for bronze liners or 6.5 mm, whichever is greater.

(ii) Thickness between bearings

The thickness of a continuous bronze liner between bearings is to be not less than three-fourths of the thickness, t, determined by the foregoing equation.

(iii) Continuous fitted liners

Continuous fitted liners are to be in one piece or, if made of two or more lengths, the joining of the separate pieces is to be done by an approved method of fusion through not less than two-thirds the thickness of the liner or by an approved rubber seal.

(iv) Fit between bearings

If the liner does not fit the shaft tightly between the bearing portions, the space between the shaft and liner is to be filled by pressure with an insoluble, non-corrosive compound.

(v) Material and fit

Fitted liners are to be of a high-grade composition, bronze or other approved alloy, free from porosity and other defects, and are to prove tight under hydrostatic test of 1 bar. All liners are to be carefully shrunk or forced upon the shaft by pressure and they are not to be secured by pins.

(vi) Glass reinforced plastic coating

Glass reinforced plastic coatings may be fitted on propulsion shafting when applied by a trained technician, utilizing a procedure that complies with a recognized industry standard, such as ASTM D5162, to the satisfaction of the Surveyor. Such coatings are to consist of at least four plies of cross-woven glass tape impregnated with resin, or an equivalent process. Prior to coating, the shaft is to be cleaned with a suitable solvent and grit-blasted. The shaft is to be examined prior to coating and the first layer is to be applied in the presence of the Surveyor. Subsequent to coating, the finished shaft is to be subjected to a spark test or equivalent to verify freedom from porosity to the satisfaction of the Surveyor. In all cases where reinforced plastic coatings are employed, effective means are to be provided to prevent water having access to the shaft. Provisions are to be made for overlapping and adequately bonding the coating to fitted or clad liners. The end of the liner is to be stepped and tapered as required to protect the end of the wrapping.

(vii) Stainless steel cladding

Stainless steel cladding of shafts is to be carried out in accordance with an approved procedure.

(b) Propeller shaft bearings

The length of the bearing in the sternbush next to and supporting the propeller is to be as follows:

(i) Water lubricated bearings

(1) For water lubricated bearings which are lined with rubber composition or staves of approved plastics material, the length is to be not less than four times the diameter required for the screwshaft under the liner.

(2) For water lubricated bearings lined with two or more circumferentially spaced sectors, of an approved composed material, the length of the bearing is to be such that the nominal bearing

pressure will not exceed manufacturer's recommendations. The length of the bearing is to be not less than twice its diameter. However, the Society may consider to increase the length of the bearing to craft with special service purposes or restrictions.

(ii) Oil lubricated bearings

(1) For bearings which are white-metal lined, oil lubricated and provided with an approved type of oil sealing gland, the length of the bearing is to be approximately twice the diameter required for the screwshaft and is to be such that the nominal bearing pressure will not exceed 0.8 N/mm^2. The length of the bearing is to be not less than 1.5 times its diameter.

(2) For bearings of cast iron and bronze which are oil lubricated and fitted with an approved oil sealing gland, the length of the bearing is, in general, to be not less than four times the diameter required for the screwshaft.

(3) The length of synthetic rubber, reinforced resin or plastic oil-lubricated propeller end bearings fitted with an approved oil-seal gland is to be on the order of two times the required propeller shaft diameter. The length of the bearing may be less, provided the nominal bearing pressure is not more than 0.60 N/mm^2, as determined by static bearing reaction calculation taking into account shaft and propeller weight which is deemed to be exerted solely on the aft bearing, divided by the projected area of the shaft. The minimum length, however, is not to be less than 1.5 times the actual diameter. Where the material has demonstrated satisfactory testing and operating experience, consideration may be given to increased bearing pressure.

(c) Solid couplings

(i) Fitted bolts

The minimum diameter of fitted shaft coupling bolts is to be determined by the following equation.

$$d_b = 0.64\sqrt{\frac{D^3(S+c)}{NBS_b}} \qquad (mm)$$

where

d_b = Diameter of bolts at joints, in mm.

D = Minimum required shaft diameter designed considering the largest combined torque (static and dynamic), acting at the shaft in vicinity of the respective coupling flanges; mm, see 2.6.7, but not less than the minimum required intermediate shaft diameter, as per 2.6.4(a) or 2.6.4(b), in mm.

S = Minimum specific tensile strength of shaft material, in N/mm^2.

c = 160

N = Number of bolts fitted in one coupling

B = Bolt circle diameter, in mm.

S_b = Minimum specific tensile strength of bolt material, in N/mm^2. To be not less than S. S_b, is to be taken not more than 1.7S or 1,000 n/mm^2, whichever is less, for calculation purposes.

Notes:

(1) The bolts are to be assembled with an interference fit.

(2) The use of other materials will be subject to special consideration based on submitted engineering analyses.

(ii) Non-fitted bolts

The diameter of pre-stressed, non-fitted coupling bolts will be considered upon the submittal of detailed preloading and stress calculations and fitting instructions. The tensile stress on the bolt due to pre-stressing and astern pull is not to exceed 90% of the minimum specified yield strength of the bolt material. In addition, the bearing stress on any member such as the shaft, bolt, threads or nut is not to exceed 90% of the minimum specified yield strength of the material for that member.

(1) Power transmitted by prestress only

Where bolts are under pure tension, the factor of safety against slip under the worst of the operating conditions, including mean transmitted torque plus vibratory torque due to torsional loads, is to be at least as follows:

a) Inaccessible couplings (external to the hull or not readily accessible): 2.8

b) Accessible couplings (internal to the hull): 2.0

(2) Power transmitted by combination prestress and shear
Where the power is transmitted by a combination of fitted bolts and pre-stressed, non-fitted bolts, the components are to meet the following criteria:

a) Fitted bolts

The shear stress under the maximum torque corresponding to the worst loaded condition is to be not more than 50% of the minimum specified tensile yield strength of the bolt material.

b) Non-fitted bolts

The factor of safety against slip under the maximum torque corresponding to the worst loaded condition and the specified bolt tension is to be at least 1.6 for inaccessible couplings and 1.1 for accessible couplings.

(3) Dowels used for transmitting power
Dowels connecting the propeller shaft flange to the controllable pitch propeller hub, utilized with non-fitted bolts to transmit power, are considered equivalent to fitted coupling bolts and are to comply with 2.6.5(c)(i) and, if applicable, 2.6.5(c)(ii)(2)a). The dowels are to be accurately fitted and effectively secured against axial movement. The coupling is to be satisfactory for astern condition.

(iii) Flanges

The thickness of coupling flanges is not to be less than the minimum required diameter of the coupling bolts or 0.2 times D (as defined in 2.6.4(a) or 2.6.4(b)), whichever is greater. The fillet radius at the base of an integral flange is not to be less than 0.08 times the actual shaft diameter. Consideration of a recognized shaft coupling standard will be given to fillets of multiple radii design. In general, the surface finish for fillet radii is not to be rougher than 1.6 μmeters RMS. For the fillet radius for propeller shaft to propeller coupling flange, see Note (4) of Table IV 2-2.

(iv) Locking arrangement

After assembly, all coupling bolts and associated nuts are to be fitted with locking arrangement.

(v) Demountable couplings

Couplings are to be made of steel or other approved ductile material. The strength of demountable couplings and keys is to be equivalent to that of the shaft. Couplings are to be accurately fitted to the shaft. Where necessary, provisions for resisting thrust loading are to be provided.

Hydraulic and other shrink fit couplings will be specially considered upon submittal of detailed preloading and stress calculations and fitting instructions. In general, the torsional holding capacity is to be at least 2.8 times the transmitted mean torque plus vibratory torque due to torsionals for inaccessible couplings (external to the hull or not readily accessible) and at least 2.0 times for accessible couplings (internal to the hull). The preload stress is not to exceed 70% of the minimum specified yield strength.

2.6.6 Cardan shaft

Cardan shafts are to be designed in accordance with the equation for propulsion shaft in 2.6.4(a) , and flanges and bolts are to be in accordance with 2.6.5(c)(i), 2.6.5(c)(ii) and 2.6.5(c)(iii). The design of splines, yokes and cross-members are to be evaluated based on engineering analyses which are to be submitted for review. Where applicable, the cardan shaft assembly is to contain provisions for bearing thrust or pull from the propeller.

2.6.7 Alignment and vibration

(a) General

Propulsion shafting is to be aligned with the location and spacing of the shaft bearings, being such as to give acceptable bearing reactions and shaft bending moments and also acceptable amplitudes of vibration for all conditions of craft loading and operation.

The designer or the builder is to evaluate the propulsion shafting system, taking into consideration any forces or factors which may affect the reliability of the propulsion shafting system, including weight of the propeller and shafts, hydrodynamic forces acting on the propeller, number of propeller blades in relation to diesel engine cylinders, misalignment forces, thermal expansion, flexibility of engine and thrust bearing foundations, engine induced vibrations, gear tooth loadings, flexible couplings, effect of power take-off arrangements from the propulsion shafting system driving auxiliaries, etc., as applicable, as well as any limits for vibrations and loadings specified by the equipment manufacturers.

(b) Craft of 61 m in length and over

(i) Shaft alignment calculations

The requirements in 6.11 of Part IV of the Rules for Steel Ships are to be complied with.

(ii) Torsional vibrations

The requirements in 6.8 of Part IV of the Rules for Steel Ships are to be complied with.

(iii) Axial vibrations

The requirements in 6.9 of Part IV of the Rules for Steel Ships are to be complied with.

(iv) Lateral (whirling) vibrations

The requirements in 6.10 of Part IV of the Rules for Steel Ships are to be complied with.

Where the craft are expected to service at low speed continually, lateral vibration of shafting and mechanical properties of bearings are to be taken into account to prevent overwearing of the bearing.

(v) Cast resin chocks

Resin chocks and their installation are to comply with the requirements in 19.2 of Part XI of the Rules for Steel Ships.

(c) Craft below 61 m in length

(i) Torsional vibration

For craft fitted with an unusual propulsion arrangement or without vibration dampers, a torsional vibration analysis of the propulsion system showing compliance with 6.8 of Part IV of the Rules for Steel Ships is to be submitted. This is not required for craft under 20 m length or where the installation is essentially the same as previous designs which have been proven satisfactory.

(ii) Lateral (whirling) vibrations

Where the craft are expected to service at low speed continually, lateral vibration of shafting and mechanical properties of bearings are to be taken into account to prevent overwearing of the bearing.

2.6.8 Circulating currents

Where means are provided to prevent circulating currents from passing between the propeller, shaft and the hull, a warning notice plate is to be provided in a visible place cautioning against the removal of such protection.

2.7 Steam and Gas Turbines

Steam and gas turbines are to comply with the applicable requirements of Chapter 2 of Part IV of the Rules for Steel Ships. In addition, gas turbines are to comply with the requirements of this Section.

2.7.1 General

(a) Piping systems

Piping systems for gas turbines are to comply with the applicable requirements in Chapter 3 of this Part in addition to this section.

(b) Pressure vessels and heat exchangers

Pressure vessels and heat exchangers are to be in accordance with the applicable requirements of 2.2 of this Part.

(c) Automatic safety devices

Details of the manufacturer's proposed automatic safety devices to guard against hazardous conditions arising in the event of malfunction in the turbine installation are to be provided together with the Failure Mode and Effect Analysis (FMEA).

2.7.2 Fuel oil system

(a) General

In addition to the applicable requirements of 2.1 of this Part, fuel oil systems for gas turbines are to comply with the following.

(b) Pumps, heater and strainers

There are to be at least two independent fuel oil service pumps, each of sufficient capacity to supply turbines at full power and arranged that one may be overhauled while the other is in service. Oil heaters are to be similarly installed in multiples.

Oil strainers are to be installed in the suction and discharge lines and are to be either of the duplex type or other approved filter which is capable of being cleaned without interrupting the oil supply. Where strainers are fitted in parallel to enable cleaning without disrupting the oil supply, means are to be provided to minimize the possibility of a strainer under pressure being opened inadvertently. Strainers are to be provided with suitable means for venting when being put into operation and being depressurized before being opened. Valves or cocks with drain pipes led to a safe location are to be used for this purpose.

(c) Shielding of fuel oil service piping

Piping between the service pump and the combustor is to be effectively jacked or shielded as in 2.1.5(a)(ii), 2.1.5(a)(iii)(2)a) and 2.1.5(a)(iii)(2)b) of this Chapter.

(d) Drainage of excess fuel

Provision is to be made to drain all excess fuel oil, particularly fuel which might reach the interior of the jet pipe or exhaust system after a false start or after stopping, to a safe position so as to avoid a fire hazard.

(e) Low flash point fuel

The use of fuel oil with flash point of 60°C or below is to be specially considered by the Society.

2.7.3 Starting arrangements

Staring arrangements for gas turbines installations are to be capable of providing an equivalent number of starts as that required in 2.1.3 of this Chapter.

2.7.4 Exhaust systems

Exhaust gas systems are to be in accordance with 2.1.4(b) of this Chapter as well as in accordance with the turbine manufacturer's recommendations. Gas turbine exhausts are to be located and arranged so that hot exhaust gases are directed away from walkways and other areas to which personnel have access.

2.7.5 Turbine enclosures

Where an acoustic enclosure is fitted which completely surrounds the gas turbine and the high-pressure oil pipes, a fire detection and extinguishing system is to be provided for the acoustic enclosure.

2.8 Propulsion and Lift Devices for Air Cushion Craft

2.8.1 General

(a) Application

Provisions of this Section apply to all air cushion craft.

(b) Plans and particulars to be submitted

Full details are to be submitted for all components that directly provide thrust and lift including all machinery items and any associated air propellers, ducts, vanes, scoops and nozzles.

2.8.2 Materials

(a) General

The design of propulsion and lift devices is to pay due regard to the effects of allowable corrosion, electrolytic action between different metals, erosion or cavitation which may result from operation in environments in which they are subjected to spray, debris, salt, sand, icing, etc.

(b) Material testing

The materials of the shafts, impellers, and couplings are to be tested in the presence of the Surveyor for verification of their compliance with the applicable requirements of Part XI of the Rules for Steel Ships, or such other appropriate material specifications as may be approved in connection with a particular design.

2.8.3 Design

(a) General

(i) Arrangements

Propulsion and lift arrangements may be provided by separate devices, or be integrated into a single propulsion and lift device. Propulsion devices are those which directly provide the propulsive thrust. Appropriate arrangements are to be made to ensure that:

(1) Ingestion of debris or foreign matter is minimized;

(2) The possibility of injury to personnel from shafting or rotating parts is minimized; and

(3) Where necessary, inspection and removal of debris can be carried out safely in service.

(i) Calculations

Design basis stress calculations for propulsion and lift devices are to be submitted to substantiate the suitability and strength of the components for the intended service and compliance with a recognized standard or code of practice.

2.9 Craft less than 24 meters in Length

The requirements of this Section are applicable to all craft less than 24 meters in length. The requirements of 2.1 through 2.8 are still applicable except as modified herein.

2.9.1 Diesel engines

Diesel engines are to meet the requirements of 2.1 of this Chapter, as applicable except the requirements for sea suction as follows:

At least two independent sea suctions are to be provided for supplying water to the engine jackets or to the heat exchangers, except that for multihull craft classed with restricted service (see 1.4.4 of Part I of the Rules), special consideration may be given. The sea suctions are to be located as to minimize the possibility of blanking off the cooling water. For multiple engine installations fitted with individual sea suctions for each engine, two means of supplying cooling water to each engine may be omitted where the craft are fitted with two or more propulsion units and can maintain 1/2 design speed with one propulsion shut down.

2.9.2 Shafting and gears

(a) Outboard engines

Outboard gasoline engines are to be built to an international or national standard acceptable to the Society or have at least two years of service in the marine industry. The installation is to be in accordance with manufacturer's recommendations.

(b) Inboard/outboard installations

(i) Inboard/outboard propulsion systems

Inboard/outboard propulsion systems (gearing, transmission, etc.) are to be rated for the maximum rating and RPM of the associated prime mover. The installation is to be in accordance with manufacturer's recommendations.

(ii) Gears for inboard and inboard/outboard propulsion systems

Gears for inboard and inboard/outboard propulsion systems are to be designed and built for installation in a marine environment and rated to the maximum rating and RPM of the associated prime mover. The gears are to be built to a standard acceptable to the Society or have at least two years of service in the marine industry. The installation is to be in accordance with manufacturer's recommendations.

(c) Inboard installations

Propulsion shafting installations are to comply with one of the following:

- 2.6.4, or
- American Boat and Yacht Council (ABYC), Section P-6.5 using a design coefficient (C_d) of at least 15, or
- Recognized standard acceptable to the Society, or
- Submission of a fatigue analysis showing that the proposed shafting size has a safety factor of at least 2.

(d) Propulsion shaft alignment and vibrations

2.6 of this Chapter is not applicable to craft under 24 meters in length.

2.9.3 Steering gears

(a) General

Hydraulic and electrical power operated steering gears and orbitrol systems are to comply with 2.4 of this Chapter, except as modified below:

- Rudder actuators will be accepted based on Manufacturer's Certification
- Hydraulic power units will be accepted based on Manufacturer's Certification

Alternatively, the following ISO standards, as applicable, may be substituted for the requirements of this Section:

- ISO 8847 : Small Craft – Steering Gear – Wire Rope and Pulley Systems

- ISO 8848 : Small Craft – Remote Steering System
- ISO 9775 : Small Craft – Remote Steering Systems for Single Outboard Motors of 15 kW to 40 kW Power
- ISO 10592 : Small Craft – Hydraulic Steering Systems

(b) System arrangements

Steering systems are to meet the requirements of 2.4.5(d) and 2.4.9(a)(ii), except when the craft can meet one of the following requirements to the satisfaction of the Head office of the Society and the Surveyor:

- For craft fitted with multiple propulsion units and the steering system disabled and/or locked in a neutral position, steering can be effected by varying the speed and direction of the propulsion units. The propulsion units are to be spaced as widely as practical and be capable of steering the craft in the worst anticipated operational conditions.
- When using mechanical steering systems, sufficient supplies are carried so as to be capable of temporarily repairing the steering system in a timely manner until permanent repairs can be affected at the nearest port of refuge.
- The steering can be effected manually under the worst anticipated operational conditions (i.e. physically turning the rudder, outboard motor, etc.).

(c) Mechanical steering gears

Where mechanical steering systems are permitted, the following are applicable.

(i) Steering chains and wire ropes

Steering chains and wire rope are to be tested, as required by Part XI of the Rules for Steel Ships.

(ii) Sheaves

Sheaves are to be of ample size and so placed as to provide a fair lead to the quadrant and avoid acute angles. Parts subjected to shock are not to be of cast iron. Guards are to be placed around the sheaves to protect against injury. For sheaves intended for use with ropes, the radius of the grooves is to be equal to that of the rope plus 0.8 mm, and the sheave diameter is to be determined on the basis of wire rope flexibility. For 6 × 37 wire rope, the sheave diameter is to be not less than 18 times that of the rope. For wire ropes of lesser flexibility, the sheave diameter is to be increased accordingly. Sheave diameters for chain are to be not less than 30 times the chain diameter.

(iii) Buffers

Steering gears other than hydraulic type are to be designed with suitable buffer arrangement to relieve the gear from shocks to the rudder.

2.9.4 Inboard/outboard and outboard installations

(a) General

Steering installations for inboard/outboard and outboard installations are to be in accordance with manufacturer's recommendations as well as the applicable requirements of this section. Steering components which are provided as part of the inboard/outboard or outboard installation are not required to be certified under 2.4.4.

(b) Instrumentation

Instrumentation is to be in accordance with 2.4.7(e), as applicable, except that a rudder angle indicator is not required for that craft for which the rudder or outboard motor is in a direct line of sight from the navigation bridge and the steering angle can be determined visually.

(c) Communications

A means of communication is not required for craft which have a direct line of sight between the main steering control station and the location of the steering gear.

(d) Installation, tests and trials

Steering gear operation is to be demonstrated to the satisfaction of the Surveyor in accordance with 2.4.7(f), 2.4.9(a)(ii) and 2.4.9(b).

Chapter 3
Piping and Pumping Systems

3.1 General

3.1.1 Piping arrangement

Piping systems are to comply with the requirements specified in 2.13 of Part VI of the Rules for Steel Ships.

3.1.2 Design pressure and design temperature

(a) Design pressure

Design pressure is the maximum working pressure of a medium inside pipe and is not to be less than the following pressures given in (i) to (iii):

(i) For piping systems fitted with a relief valve or other overpressure protective device, the pressure based on the set pressure of the relief valve or over pressure protective device. However, for steam piping systems connected to a boiler or piping systems fitted to a pressure vessel, the design pressure of the boiler shell (nominal pressure if the boiler has a superheater) or design pressure for the shell of a pressure vessel.

(ii) For piping on the discharge side of the pumps, the pressure based on the delivery pressure of the pump with the valve on the discharge side closed running the pump at rated speed. However, for pumps having relief valve or overpressure protective device, the pressure based on its set pressure.

(iii) For blow-off pipings of boilers, the pressure is not less than 1.25 times the pressure of the boiler drum.

(b) Design temperature

Design temperature is the highest working temperature of the medium inside pipes at the designed condition.

(c) Classes of pipes

Pipes are classified to comply with the requirements specified in 1.4 of Part VI of the Rules for Steel Ships according to the type of medium, design pressure and design temperature.

3.1.3 Plans and data

Plans and data are to be submitted in accordance with 1.6 of Part VI of the Rules for Steel Ships for consideration and approval.

3.1.4 Materials

In addition to the requirements specified in 1.5 of Part VI of the Rules for Steel Ships, the following requirements are to apply:

(a) Application

(i) Materials used for auxiliary machinery are to be adequate for their service conditions. The materials used for essential parts of auxiliary machinery are to comply with the standards deemed appropriate by the Society.

(ii) Materials for pipes, valves and other fittings are to comply with the requirements specified in 2.3 of Part VI of the Rules for Steel Ships.

However materials which comply with a standard deemed appropriate by the Society may be accepted for pipes with both a design pressure less than 10 bar and a design temperature of 230℃ or less.

(iii) Materials for valves or cocks (hereinafter referred to as valves in this Chapter) and pipe fittings are to comply with the requirements specified in 2.3 of Part VI of the Rules for Steel Ships.

However materials which comply with a standard deemed appropriate by the Society may be accepted for the following (1) and (2).

(1) Valves and pipe fittings used for pipes with a nominal diameter less than 100 mm.

(2) Valves and pipe fittings with both a design pressure less than 30 bar and a design temperature of 230℃ or less.

(iv) Notwithstanding the requirements above, materials for pipes, valves and pipe fittings are to comply with the requirements of the service limitations for materials specified in Chapter 2 of Part VI of the Rules for Steel Ships.

(v) In general, the use of aluminum pipes is to be restricted to the service systems mentioned as below:

(1) sea water cooling system;

(2) fresh water cooling system;

(3) bilge system;

(4) ballast system;

(5) air pipes and sounding pipes of sea water ballast tanks and fresh water ballast tanks;

(6) piping for non-essential service not containing flammable fluids.

but for craft not engaged on international voyages, aluminum pipes may also be used in fuel oil filling pipes as well as air pipes, overflow pipes and sounding pipes in fuel oil tanks.

(b) When aluminum alloy pipes are used, the following requirements are to be complied with:

(i) Aluminum alloy pipes are, as a rule, to be in accordance with the recognized standards deemed appropriate by the Society, and are to be of seamless drawn pipes or seamless extruded pipes.

(ii) Aluminum alloy pipes are not to be used for any of the following applications, unless deemed appropriate by the Society:

(1) Pipes with a design temperature exceeding 150℃

(2) Any pipe used in areas where it penetrates either A class division or B class division.

(iii) The required thickness of aluminum alloy pipes subject to an internal pressure is to be determined using the formula in 2.2 of Part VI of the Rules for Steel Ships.

In this case, permissible stress (k) is to be of the minimum value of the following values. However, when the design temperature is not in the creep region of the material, no consideration may be required for the value of k_3.

$$k_1 = \frac{R_{20}}{4.0} \qquad k_2 = \frac{E_t}{1.5} \qquad k_3 = \frac{S_R}{1.6}$$

where:

R_{20} = Specific minimum tensile strength of the material at room temperature (less than 50℃), in N/mm^2.

E_t = 0.2% proof stress of the material at the design temperature, in N/mm^2.

S_R = Mean value of creep breaking stress of the material after 100,000 hours at the design temperature, in N/mm^2.

(c) The materials not specified above are to be subject to special approval by the Society.

3.1.5 Thickness of pipes

Thickness of pipes is to comply with the requirements specified in 2.2 of Part VI of the Rules for Steel Ships.

3.1.6 Construction

(a) Valves and pipe fittings

Construction of valves and pipe fittings is to comply with the requirements specified in Chapter 2 of Part VI of the Rules for Steel Ships

(b) Storage tanks

Construction of storage tanks is to comply with the requirements specified in 4.4.3(q) of Part VI of the Rules for Steel Ships. In case where storage tanks for fuel oil are manufactured with the material other than steel plating, however, minimum thickness of plating is to be:

(i) Stainless steel: 2.5 mm

(ii) Aluminum alloy: 4.5 mm

(iii) Other than above the value specially approved by the Society.

3.1.7 Connection and forming of piping system

Connection and forming of piping system is to comply with the requirements specified in 2.10 of Part VI of the Rules for Steel Ships.

3.1.8 Sea suction valves and overboard discharge valves

(a) Location and construction

(i) Sea inlet and overboard discharge pipes are to be connected to the valves or cocks which are fitted in accordance with the requirements in 3.1.8(a)(iii) and 3.1.8(a)(iv) below.

(ii) The locations of overboard discharges subjected to pressure by the pump are not to be such that water can be discharged into life boats and liferafts at fixed launching positions including those under launching device when they are launched, unless special provision is made for preventing any discharge of water into them.

(iii) Sea suction valves and overboard discharge valves or cocks fitted to the ship's side, sea chests forming a part of the ship's structure or distance pieces attached to the shell plating are to be located at easily accessible positions.

(iv) Valves or cocks prescribed in 3.1.8(a)(iii) above are to be fitted in accordance with the following (1) to (3):

(1) Valves or cocks are to be fitted to doublings which are welded to the shell plating or sea chest by using stud bolts not piercing the shell plating and sea chest.

(2) Valves or cocks are to be fitted by bolts to distance pieces attached to the shell plating. In this case, the distance piece is to be of rigid construction and as short as practicable.

(3) Where valves or cocks are fitted to the nonmetallic shell plating such as FRP, the fitting method is to be such that deemed appropriate by the Society.

(v) The valve spindles of sea suction valves are to be extended above the lower platform where they are easily operable. Power-operated sea suction valves are to be arranged also for manual operation. Sea suction valves are to be provided with indicators to show whether they are open or closed.

(vi) Overboard discharge valves and cocks are to be fitted with spigots passing through the shell plating and a protection rings specified in 3.1.8(a)(vii)(1), but the spigots on the valves or cocks may be omitted if these fittings are attached to pads or distance pieces which themselves form spigots in way of the shell plating and protecting rings. Overboard discharge valves and cocks are to be provided with indicators to show whether they are open or closed.

(vii) Blow-off valves or cocks of boilers and evaporators are to comply with the following requirements in (1) and (2):

(1) Blow-off valves or cocks of boilers and evaporators are to be fitted in easily operable positions and to be provided with protection rings on the outside of the shell plating to prevent corrosion.

(2) Cock handles are not to be capable of being removed unless the cocks are shut, and, if valves are fitted, the hand wheels are to be suitably retained on the spindle.

(b) Sea chests

Sea chests are to be of substantial construction not to blank off the suction due to air-locking.

(c) Gratings of sea suctions

(i) Gratings are to be fitted at the sea inlets. The net area through grating is not to be less than twice the total inlet area of sea suction valves.

(ii) Provision is to be made for cleaning the gratings specified in 3.1.8(c)(i) above by use of low pressure steam, compressed air, etc.

3.1.9 Scuppers and sanitary discharges

(a) Scuppers piping sufficient in number and size to provided effective drainage are to be provided on all decks. However the Society may permit the means of drainage to be dispensed with in any particular compartment of any ship or class of ship if it is satisfied that by reason of size or internal subdivision of those spaces the safety of the ship is not thereby impaired.

(b) Scuppers and sanitary discharges are to comply with the requirements specified in Chapter 22 of Part II of the Rules for Steel Ships.

3.1.10 Air Pipes

Air pipes are to comply with the requirements specified in 3.2 and 3.3 of Part VI of the Rules for Steel Ships.

3.1.11 Overflow pipes

(a) General

(i) Where tanks which can be pumped up come under either one of the following categories, overflow pipes are to be provided:

(1) Where total sectional area of air pipes to tanks which can be pumped up is less than 1.25 times total sectional area of filling pipes.

(2) Where there is any opening below the open ends of air pipes fitted to the tanks; and

(3) Fuel oil settling tanks and fuel oil service tanks.

(ii) Overflow pipes other than those to tanks for fuel oil, lubricating oil and other flammable oils are to be led to the open air, or alternatively, to proper positions where the overflows can be disposed of.

(iii) Overflow pipes are to be arranged to be self-draining.

(b) Sizes of overflow pipes

The aggregated sectional area of overflow pipes which come under 3.1.11(a)(i) above is to be not less than 1.25 times the aggregated sectional area of filling pipes.

(c) Overflow pipes to fuel oil, lubricating oil and other flammable oil tanks

Overflow pipes to tanks for fuel oil, lubricating oil and other flammable oil are to comply with the requirements specified in 3.2 of Part VI of the Rules for Steel Ships.

(d) Preventive means of counter-flow of overflow

(i) Adequate means are to be provided on overflow pipes so that in the event of any one of the tanks being bilged, the other tanks cannot be flooded from the sea through the overflow pipes.

(ii) Overflow pipes discharging through the ship's sides are to extend above the load line, and are to be provided with non-return valves fitted on the ship's sides. Where the overflow pipes do not extend above the freeboard deck, additional effective means are to be provided to prevent the sea water from passing inboard.

3.1.12 Sounding pipes

(a) General

(i) All the tanks, cofferdams and areas the access to which is difficult are to be provided with a sounding pipe or a liquid level indicator.

(ii) Name plates are to be affixed to the upper ends of sounding pipes.

(b) Upper ends of sounding pipes

(i) Sounding pipes are to be led to positions above the bulkhead deck which are at all times readily accessible, and are to be provided with effective closing means at their upper ends. The sounding pipes, however, may be led to readily accessible positions from the platform of the machinery space provided that the following closing means are provided according to the kinds of tanks.

(1) Sounding pipes to tanks for fuel oil

a) Self-closing blanking devices on the termination of sounding pipes

b) Small diameter control cock located below the blanking device for the purpose of ascertaining that oil fuel is not present before opening the blanking device

c) Means to ensure that any spillage of fuel oil through the control cock involves no ignition hazard

(2) Sounding pipes to tanks for lubricating oil and other flammable oils
Sluice valves or cocks with self-closing means

(3) Sounding pipes to tanks other than mentioned in (1), (2) and cofferdams
Sluice valves, cocks or screw caps attached to the pipes by chain.

(ii) The upper ends of sounding pipes to tanks for fuel oil, lubricating oil and other flammable oils are not to terminate in accommodation spaces and adjacent to the electrical equipment, boilers and other heated surfaces.

(c) Construction of sounding pipes

Construction of sounding pipes is to comply with the requirements specified in 3.4 of Part VI of the Rules for Steel Ships.

(d) Construction of liquid level indicators

(i) A liquid level indicator which is specified in 3.1.12(a)(i) above is to be of the type approved by the Society. However, when a liquid level indicator conforms to a standard deemed appropriate by the Society or when it is provided with a certificate deemed appropriate by the Society, the requirements do not apply.

(ii) Glass gauges used for tanks carrying fuel oils, lubricating oils and other flammable oils are to comply with the following requirements (1) and (2):

(1) The glasses used for oil level indicators are to be of flat shape, of heat resisting quality, and adequately protected from mechanical damage.

(2) The valves or cocks at the lower ends of glass gauges are to be provided with self-closing means.

3.2 Bilge and Ballast Systems

3.2.1 General arrangement of bilge systems

A pumping system is to be provided in all craft capable of pumping from and draining any compartment when the craft is on an even keel and either upright or listed five degrees. For this purpose, wing suctions will often be necessary, except in narrow compartments at the ends of the craft. Arrangements are to be made whereby water in the compartment will drain to the suction pipes. Efficient means are to be provided for draining water from all tank tops and other watertight flats. Peak tanks and comparatively small compartments, such as chain lockers, echo sounder spaces, and decks over peak tanks, etc., may be drained by ejectors or hand pumps. Where ejectors are used for this purpose, the overboard discharge arrangements are to comply with 3.1.9 of this Chapter.

3.2.2 Bilge pumps

(a) Number of pumps

(i) Monohull craft

(1) Craft length ≥ 24 m
Each monohull craft 24 m in length or greater is to be provided with two power-driven bilge pumps, one of which may be attached to the propulsion unit.

(2) Craft length < 24 m
Each monohull craft less than 24 m in length is to be provided with at least one fixed power-driven pump, which may be an attached unit, and one portable hand pump.

(ii) Multihull craft

(1) Craft length ≥ 24 m
On multihull craft 24 m in length or greater, each hull is to be provided with at least two power-driven bilge pumps, unless a bilge pump in one hull is capable of pumping bilge in the other hull. At least one bilge pump in each hull is to be an independently-driven pump

(2) Craft length < 24 m
On multihull craft less than 24 min length, each hull is to be provided with at least one fixed power-driven bilge pump, which may be an attached unit, unless the system is arranged such that a single fixed power-driven bilge pump is capable of taking suction from either hull. In this case, one portable and pump is also to be provided.

(iii) Alternative arrangement-submersible pumps

As an alternative to 3.2.2(a)(i) and 3.2.2(a)(ii) above, an arrangement utilizing submersible pumps may be utilized. In bilge pumping arrangements where a bilge main is not provided, then, with the exception of spaces forward of public spaces and crew accommodations, at least one fixed submersible pump is to be provided for each space. In addition, at least one portable pump is to be provided and be supplied from the emergency supply, if electric, for use on individual spaces.

(b) Capacity

The capacity of each pump is to be in accordance with the following:

Craft length (L)	Minimum Capacity per Pump
L < 24 m	Q = 5.5 m^3/hr
24 m ≤ L < 30.5 m	Q = 11.36 m^3/hr
30.5 m ≤ L < 45.7 m	Q = 14.33 m^3/hr
L ≥ 45.7 m	Q = $0.00575d^2$ m^3/hr

Notes:

(1) The variables above are as follows:

Q = Pump capacity

d = Required diameter of main bilge line suction, mm. See 3.2.3(e) of this Section.

(2) For the craft of less than 24 m in length, minimum capacity of hand pump as specified in 3.2.2(a) above is to be 1.13 m^3/hr.

When more than two pumps are connected to the bilge system, their arrangement and aggregate capacity are not to be less effective.

The total capacity, Q_t, of fixed submersible bilge pumps for each hull is not to be less than 2.4 times the pump capacity, Q, determined in the above. The capacity, Q_n, of each submersible pump is not to be less than:

$Q_n = \frac{Q_t}{N-1}$ m^3/hr, with a minimum capacity of 8 m^3/hr

(c) Centrifugal pumps

Where centrifugal pumps are installed, suitable means for priming are to be provided.

(d) Independent power bilge pumps

Sanitary, ballast and general service pumps may be accepted as independent power bilge pumps, provided they are of the required capacity and are fitted with the necessary control valves required by 3.2.3(a) as below for pumping bilges.

3.2.3 Bilge and ballast piping

(a) General

The arrangement of the bilge and ballast pumping systems is to be such as to prevent the possibility of water or oil passing into the cargo and machinery spaces, or from one compartment to another, whether from the sea, water ballast or oil tanks. The bilge and ballast mains are to have separate control valves at the pumps.

(b) Installation

(i) Bilge or ballast pipes, where permitted to pass through compartments intended for the carriage of oil, are to be of either steel or wrought iron. Where the craft's hull is constructed of Aluminum or FRP, aluminum pipe may be used provided it is extra heavy.

(ii) Where bilge pipes in way of deep tanks are not led through a watertight or oil-tight tunnel, the bilge lines are to be of steel and extra heavy. Similarly, where ballast pipes in way of deep tanks other than ballast tanks are not led through a watertight or oil-tight tunnel, the ballast lines are to be of steel and extra heavy. Where the craft's hull is constructed of Aluminum or FRP, aluminum pipe may be used provided it is extra heavy.

(iii) For both bilge and ballast piping, the number of joints is to be kept to a minimum and to be arc welded or extra heavy flanged. The piping within a deep tank is to be installed to take care of expansion. A non-return valve is to be fitted at the open end of bilge pipes.

(c) Manifolds, cocks and valves

(i) General

All manifolds, cocks and valves in connection with the bilge pumping arrangement are to be in positions which are accessible at all times under ordinary circumstances. All valves in the machinery space controlling the bilge suctions from the various compartments are to be of the stop-check type. If valves are fitted at the open ends of pipes, they are to be of the non-return type.

(ii) Common-main-type bilge systems

(1) A common-main bilge system normally consists of one or more main lines installed along the length of the craft fitted with branch bilge suction connections to various compartments. Where only one fore-and-aft bilge main is installed, the bilge main is to be located inboard of 20% of the molded beam of the craft, measured inboard from the side of the ship perpendicular to the centerline at the level of the summer load line. If there is at least one bilge main on each side of the craft, then those bilge mains may be installed within 20% of the molded beam, measured inboard from the side of the ship perpendicular to the centerline at the level of the summer load line, provided they are fitted with branch lines and control valves arranged such that it is possible to effectively pump out each compartment using the main(s) on either side of the craft.

(2) For all common-main-type bilge systems, the control valves required in the branches from the bilge main are to be accessible at all times and are to be of the stop-check type with an approved type of remote operator. Remote operators may be located in a manned machinery space, or from an accessible position above the freeboard deck or from underdeck walkways. Remote operators may be of the hydraulic, pneumatic, electric or reach-rod type.

(iii) Controls for ballast tank valves

Ballast tank valves are to be arranged so they will remain closed at all times, except when ballasting. For this purpose, manual screw thread operated valves, positive holding arrangements for butterfly type valves or other equivalent arrangements may be used. Where installed, remote controlled valves are to be arranged so they will close and remain closed upon loss of control power, or will remain in their last position and are provided with a readily accessible manual means of operation in case of loss of power to the valve control system. Remote control of bilge and ballast valves is to be clearly marked at the control station and means are to be provided to indicate whether the valve is open or closed.

(d) Strainers

Bilge lines in machinery spaces other than emergency suctions are to be fitted with strainers easily accessible from the floor plates and are to have straight tail pipes to the bilges. The ends of bilge lines in other compartments are to be fitted with suitable strainers having an open area of not less than three times the area of the suction pipe.

(e) Size of bilge suctions

The minimum internal diameter of bilge suction pipes is to be that of the nearest commercial size within 6 mm of the diameter determined by the following equations:

(i) Main line

For the diameter of main bilge line suctions and direct bilge suctions to the pumps:

$$\mathrm{d} = 25 + 1.68\sqrt{L_f(B + D)} \qquad mm$$

(ii) Branch lines

For the equivalent diameter of the combined branch suctions to a compartment:

$$\mathrm{d} = 25 + 2.15\sqrt{l(B + D)} \qquad mm$$

where

d	=	Internal diameter of pipe, in mm
L_f	=	Length of craft, as defined in 1.1.3 of Part III of the Rules, in m
B	=	Breadth of craft, as defined in 1.1.4 of Part III of the Rules, in m
l	=	Length of compartment, in m
D	=	Molded depth to bulkhead deck or freeboard deck, in m

(iii) Main line reduction

Where engine room bilge pumps are fitted primarily for drainage within the engine room, L may be reduced by the combined length of the cargo tanks or cargo holds. In such cases, the cross sectional area of the bilge main is not to be less than twice the required cross sectional area of the engine room branch lines.

(iv) Alternate size requirements

For craft less than 30.5 m in length, the bilge pipe sizes may be in accordance with the following in lieu of 3.2.3(e)(i) above.

Craft length (L)	Minimum pipe size (I.D.)
L < 24 m	25 mm
24 m ≤ L < 30.5 m	32 mm
30.5 m ≤ L < 45.7 m	38 mm

(v) Size limits

For craft of 45.7 m in length or greater, no main suction piping is to be less than 63 mm internal diameter. No branch piping need be more than 100 mm I.D., nor is it to be less than 25 mm I.D.

(vi) Bilge common-main

The diameter of each common-main bilge line may be determined by the equation for bilge branches given in 3.2.3(e)(ii) above using the combined compartment length upstream of the point where the diameter is being determined. In case of double hull construction with full depth wing tanks served by a ballast system, where the beam of the craft is not representative of the breadth of the compartment, B may be appropriately modified to the breath of the compartment. However, no common-main bilge pipe needs to be more than the diameter for the bilge main given in 3.2.3(e)(i) above.

(f) Gravity drains

Gravity drains that penetrate the main machinery space watertight bulkheads below the freeboard deck and terminate within the main machinery space are to be fitted with a valve operable from above the freeboard deck or with quick-acting, self-closing valves. The valve should preferably be located in the main machinery space. When gravity drains from other spaces are terminated in cargo holds, the cargo hold bilge well is to be fitted with a high level alarm. Gravity drains which terminate in spaces which are protected by fixed gas extinguishing systems are to be fitted with means to prevent the escape of extinguishing medium.

3.2.4 Emergency bilge suctions for main machinery spaces

(a) An emergency bilge suction is to be fitted in each machinery space containing a propulsion prime mover. The emergency bilge suction is to be led straight to the largest independently driven pump in the main machinery space, other than the required bilge pumps. Where this pump is not suitable, the second largest suitable pump in the main machinery space may be used for this service, provided that the selected pump is not one of the required bilge pumps and its capacity is not less than that of the required bilge pump.

(b) The area of the emergency bilge suction pipe is to be equal to the full suction inlet of the pump selected. The emergency bilge line is to be provided with a suction stop-check valve, which is to be so located as to enable rapid operation, and a suitable overboard discharge line. For the emergency bilge inlet, the distance between the open end of the suction inlet and the tank top is to be adequate to allow a full flow of water.

(c) The hand wheel of emergency bilge suction valve is to be situated above the lower platform.

3.3 Fuel Oil Systems

3.3.1 General

(a) Fuel oil in the oil tanks is not to be heated to the temperature within 10℃ below the flash point of the fuel oil, unless considered appropriate by the Society.

(b) The compartments in which fuel oil burning systems, fuel oil settling and service tanks, fuel oil purifiers, etc., are located are to be readily accessible and well ventilated.

(c) The fuel oil system in the main propulsion machinery room and boiler room are to be carefully considered to make maintenance and inspection easy. Due care is to be paid against oil leakage so that it may not result in fire accidents and that it may be detected easily in case of leakage. All valves or cocks are to be capable of being operated from above the platform.

(d) Valves, cocks and other fittings fitted on fuel oil tanks are to be located in safe positions so as to be protected from external damage.

(e) Stop valves or cocks are to be fitted on both suction and delivery sides of fuel oil pumps.

(f) Where pressure relief valves are provided on the delivery side of the fuel oil pumps, arrangements are to be made so that the discharged oil may be led to the suction side of the pump.

(g) Valves and pipe fittings with a design temperature above 60℃ and a design pressure above 10 bar are to be suitable for a pressure of not less than 16 bar. Valves and pipe fittings used for fuel oil transfer piping lines, fuel oil suction piping lines and other low pressure fuel oil piping lines are to be suitable for a pressure of not less than 5 bar.

(h) Union joints used for connection of fuel oil injection pipes of diesel engines or the pipes of burning systems of boilers are to be of rigid construction and to have metal contact capable of providing sufficient oil tightness.

(i) Fuel oil pipelines including fuel oil tanks are to be segregated from ballast pipelines.

3.3.2 Fuel oil filling pipes

(a) Filling pipes for tanks containing flammable liquids are to be terminated on open deck and be arranged so that leakages are collected by suitable coamings. Fuel oil filling connections are as far as practicable to be arranged on both sides of the craft.

(b) The requirements specified in 4.4.3(h)(v) of Part VI of the Rules for Steel Ships are to be complied with.

3.3.3 Valves for tank suction pipes

Valves for tank suction pipes are to comply with the requirements specified in 2.1.2(c)(iv) of Part IX of the Rules for Steel Ships.

3.3.4 Fuel oil transfer pumps

(a) In ships where power pumps are used for pumping up to the settling and service tanks, at least two independent power fuel oil transfer pumps are to be provided, and these pumps are to be connected ready for use. Where any suitable independent power driven fuel oil pump for other purposes is available as a fuel oil transfer pump, this pump may be used as a fuel oil transfer pump.

(b) For multihull craft, notwithstanding 3.3.4(a) above, interconnecting pipe lines for fuel oil transfer pumps may be dispensed with providing that, even in the case of one engine inoperative, the craft can maintain her navigable speed.

3.3.5 Drip trays and drainage system

Drip trays and drainage system is to comply with the requirements specified in 4.4.1(h)(vii) to 4.4.1(h)(x) of Part VI of the Rules for Steel Ships.

3.3.6 Heating arrangements and temperature indication

The requirements specified in 4.4.1(f) and 4.4.1(g) of Part VI of the Rules for Steel Ships are to be complied with.

3.3.7 Fuel oil burning arrangements

The requirements specified in 4.4.2 of Part VI of the Rules for Steel Ships are to be complied with.

3.3.8 Fuel oil service tanks

The requirements specified in 4.4.3(r) of Part VI of the Rules for Steel Ships are to be complied with.

3.4 Lubricating Oil and Hydraulic Systems

3.4.1 General

(a) The compartment in which lubricating oil tanks, lubricating oil purifiers and hydraulic oil tanks are located are to be readily accessible and well ventilated.

(b) Lubricating oil system and hydraulic oil system in the main propulsion machinery room and boiler room are to be carefully considered to make maintenance and inspection easy. Due care is to be paid against oil leakage so that it may not result in fire accidents and that it may be detected easily in case of leakage. All valves or cocks are to be capable of being operated from above the platform.

(c) Valves, cocks and other fittings fitted on lubricating oil tanks and hydraulic oil tanks are to be located in safe positions so as to be protected from external damage.

(d) Valves for lubricating oil tank suction pipes are to comply with the requirements specified in 2.1.2(c)(iv) of Part IX of the Rules for Steel Ships (in this case the term fuel oil is to be read as lubricating oil).

(e) Drip trays and drainage arrangement of lubricating oil systems and hydraulic oil systems are to comply with the requirements as those applied for fuel oil systems specified in 4.4.1(h)(vii) to 4.4.1(h)(x) of Part IX of the Rules for Steel Ships.

(f) Lubricating oil heating arrangements and temperaure indication are to respectively comply with the requirements specified in as those applied for fuel oil systems specified in 4.4.1(f) and 4.4.1(g) of Part VI of the Rules for Steel Ships.

3.4.2 Lubricating oil pumps

Number and capacity of lubricating oil pumps for main propulsion machinery, propulsion shaftings and power transmission systems are to comply with the following requirements (a) or (b) :

(a) Two sets of lubricating oil pumps are to be provided with sufficient total capacity enough to maintain the supply of the oil at the maximum continuous output of the main propulsion machinery, and each of which has sufficient capacity to obtain navigable speed of the craft.

(b) Where two or more main propulsion machinery, propulsion shaftings and their power transmission systems are provided, such system that each of them has an exclusive lubricating oil pump may be accepted, providing that it is possible to give a navigable speed even if one of them is out of use.

3.4.3 Stop valves between engine and sump tank

For ships of 100 meters and above in length, where a double bottom is used as a lubricating oil sump tank, a stop valve which can be easily operated from the engine room floor or suitable counterflow prevention device is to be provided.

3.4.4 Lubricating filters

(a) Where a forced lubrication system (including gravity supply from head tank) is adopted for lubrication of machinery installations, lubricating oil filters are to be provided.

(a) The filters used for the lubricating oil systems of the main propulsion machinery, power transmission of propulsion shafting and controllable pitch propeller system are to be capable of being cleaned without stopping the supply of filtered oil.

3.4.5 Hydraulic power cylinders

The requirements of 4.5 of Part VI of the Rules for Steel Ships are to be complied with.

3.5 Pneumatic Piping Systems

3.5.1 Arrangement of air compressors and pressure relief systems

(a) Air compressors are to be so arranged that any mixing between oil and incoming air is minimized as much as possible.

(b) Each air compressor is to be provided with a relief valve to prevent the pressure from rising more than 10% above the maximum working pressure of its cylinders.

(c) In cases where water jackets of air coolers might be subject to dangerous level of excessive pressure due to any leakage of compressed air into them, suitable pressure relief arrangements are to be provided for these water jackets.

3.5.2 Relief devices and other fittings for air vessels

Relief devices and other fittings for air vessels are to comply with the requirements in 4.5 of Part V of the Rules for Steel Ships.

3.5.3 Number and total capacity of air compressors

(a) In cases where the main propulsion machinery is designed for starting by compressed air, two or more starting air compressors are to be provided and arranged so as to be able to charge each air reservoir. However, in cases where cylinders are provided with air charging valves, these charging valves will be considered to be equivalent to any air compressors driven by the main propulsion machinery.

(b) One of the air compressors prescribed in 3.5.3(a) above is to be driven by a prime mover that is not the main propulsion machinery.

(c) The total capacity of air compressors is to be sufficient to supply air into the air reservoirs from atmospheric pressure to the pressure required for the consecutive starts prescribed in 2.1.3(b) of this Part within one hour.

3.5.4 Compressed air piping

(a) Drainage systems are to be provided for compressed air piping to remove any drainage remaining inside the pipes.

(b) All discharge pipes for starting air reservoirs are to be laid directly from starting air compressor.

(c) Starting air pipes from the air reservoirs to main propulsion machinery or auxiliary engines are to be entirely separate from the compressor discharge system prescribed in 3.5.4(b) above.

3.6 Other Piping Systems

3.6.1 Thermal oil systems

Thermal oil systems are to comply with the requirements specified in 4.7 of Part VI of the Rules for Steel Ships.

3.6.2 Cooling systems

(a) Cooling pumps

Number and capacity of cooling pumps for the main propulsion machinery are to comply with the following requirements (i) or (ii):

(i) Two sets of main cooling pumps are to be provided with sufficient total capacity enough to maintain the supply of water (oil) at the maximum continuous output of the main propulsion machinery, and each of which has sufficient capacity to obtain navigable speed of the craft.

(ii) Where two or more main propulsion machinery are provided, such system that each of them has an exclusive cooling pump may be accepted providing that it is possible to give a navigable speed even if one of them is out of use.

(b) Suction of sea water

Arrangement is to be provided to introduce cooling sea water from sea suction valves fitted on two or more sea chests or sea suctions. For multihull craft, however, such a system that each hull has single sea chest respectively may be accepted providing that it is possible to give a navigable speed even if one of the engine in any hull is out of use.

3.6.3 Steam piping systems and condensate systems

Steam piping systems and condensate systems are to comply with the requirements specified in 4.2 of Part VI of the Rules for Steel Ships.

3.6.4 Feed water systems for boilers

(a) Every auxiliary boiler (including steam generating systems) which provides services essential for the safety of the ship, or which could be rendered dangerous by the failure of its feed water supply, is to be provided with two separate feed water systems, each including a stop valve, a non-return valve and a feed pump.

Total capacity of feed water pumps are to be sufficient for maximum evaporation and capacity of one feed water pump is to be sufficient to obtain navigable speed of the craft.

However, a single penetration of the steam drum is acceptable.

(b) Boiler feed water pipes are not to be led through tanks which contain oil, nor are oil pipes to be led through boiler feed water tanks.

3.6.5 Exhaust gas piping arrangement

(a) Exhaust gas piping arrangement is to comply with the requirements specified in 4.8 of Part VI of the Rules for Steel Ships.

(b) Exhaust gas piping is to be arranged with consideration of heat influence to hull plates.

(c) Open ends of exhaust gas piping are to be arranged so that exhaust gas is prevented to flow into air intakes of diesel engines, gas turbines, etc.

3.6.6 Fuel storage and refueling systems for helicopter facilities

(a) Fuels with flash point above 60°C

When fixed helicopter fuel storage and pumping systems are provided and the flash point of the fuel is above 60°C, closed cup test, the installation is to comply with 3.3 and 3.6.6(b)(v) of this Chapter.

(b) Fuels with flash point at or below 60℃ – installations on an open deck

(i) General

The designated fuel storage and refueling areas are to be suitably isolated from areas which contain a source of vapor ignition, escape routes and embarkation stations, and are not to be located on landing areas. The storage and refueling areas are to be permanently marked as an area where smoking and open flames are not permitted.

(ii) Tanks

Fixed fuel storage tanks are to be of metal construction. Mounting, securing arrangements and electrical bonding of the storage tank and refueling system are to be approved.

(iii) Vents and sounding

Fuel storage tank venting and sounding arrangements are to comply with 3.1.10 and 3.1.12 as above.

(iv) Tank valves

Fuel storage tank outlet valves are to be provided with a means of remote closure. Means are also to be provided for remote shutdown of the refueling pumps.

(v) Spill containment

To contain spillage and retain fire extinguishing agents, a coaming of at least 150 mm in height is to be provided. The coaming is to surround the fuel storage area, which consists of the fuel tank, associated piping and any pumping unit adjacent to the storage tank. Where the pumping unit or any other unit such as dispenser/coalescer unit is remote from the tank, a separate coaming is to be provided around each unit.

Drainage is to be provided for the area enclosed by the coaming, complying with the following:

(1) The area within the coaming is to be sloped toward the drain line.

(2) Drainage from the area within the coaming is to be led through a valve designed for selective output (e.g., 3-way valve) either to a holding tank complying with 3.6.6(b)(ii) and 3.6.6(b)(iii) above or directly overboard. No other valves may be fitted in the drain line.

(3) The cross sectional area of the drain line from the fuel tank coaming is to be at least twice that of the fuel storage tank outlet connection.

Fuel tank coamings not provided with drainage arrangements in accordance with the above are to be sized to contain the full volume of the fuel storage tank plus 150 mm of foam.

(vi) Electrical equipment

All electrical equipment installed within 3 meters of either the tank vent outlet or the pumping/refueling equipment is to be of a certified safe type. Electrical equipment installed may be any of the types indicated in 4.1.10(b) of this Part and is to be IEC Publication 60079-20-1 group IIA class T3.

(c) Fuels with flash points at or below 60℃ – installation within enclosed spaces

(i) Independent tanks

Fuel storage tanks and their venting and sounding arrangements are to comply with 3.6.6(b)(ii) and 3.6.6(b)(iii). The valving arrangements on the tanks are to comply with 3.3 of this Chapter.

(ii) Integral tanks

The venting and sounding arrangements for integral tanks are to comply with 3.6.6(b)(iii). Overflow and valving arrangements are to comply with 3.1.11 and 3.3 of this Chapter, respectively.

Cofferdams, thoroughly oiltight and vented, having widths as required for ready access, are to be provided for the separation of all cargo tanks from galleys and living quarters, general cargo spaces which are below the uppermost continuous deck, boiler rooms, and spaces containing propulsion machinery or other machinery where sources of ignition are normally present. Pump rooms, compartments arranged solely for ballast, and fuel-oil tanks may be considered as cofferdams in compliance with this requirement.

(iii) Access arrangements

The access to the fuel storage and refueling compartment is to be from the open deck by means of a trunk, if necessary. The compartment is to be bounded by gas tight bulkheads/decks and there is to be no direct access from any other compartment to the fuel storage and refueling compartment or access trunk.

(iv) Electrical equipment

Electrical equipment installed in the refueling pump room and the space in which an independent helicopter fuel tank storage is located is to be of a certified safe type. All electrical equipment installed within 3 meters of the tank vent outlet is to be of a certified safe type. Electrical equipment installed may be any of the types indicated in 4.1.10(b) of this Part and is to be IEC Publication 60079-20-1 group IIA class T3.

(v) Pumps

Fuel pumps for helicopter refueling are to comply with 12A.7 of Part II, 4.5 and 4.7 in Part IV of the Rules for Steel Ships and are to be provided with remote shut-down.

(vi) Piping

Helicopter refueling piping systems are to comply with 3.6.6(a).

(vii) Bilge/drainage system

Provision is to be made for drainage of the refueling pump room and cofferdams. A separate bilge pump, ejector or a bilge suction from a refueling pump may be provided for this purpose. The arrangements are to be in accordance with 3.2 of this Chapter.

(viii) Ventilation

Systems for the refueling pump room and the space in which an independent helicopter fuel tank is located are comply with the below.

(1) System and arrangement
Refueling pump rooms are to have a mechanical extraction ventilating system and ducting, in accordance with the requirements as below:

a) Lower intake

Lower (main) intakes are to be located at the lowest floor level. The number of air changes through the main intake with the damper in item b) below closed is to be at least 20 changes per hour based on the gross volume of the pump room.

b) Emergency intake

An emergency intake is to be provided at approximately 2 m above the lowest floor with damper capable of being opened or closed from the exposed main deck and lowest floor

level so that it can be used when the lower intakes are not available. The air changes in that condition is to be at least 15 changes per hour.

c) Dampers

Where the ratio of areas of the upper emergency intake and lower main intakes is such that the required number of respective air changes in items a) and b) above can be obtained, the dampers may not be required.

d) Floor plate

Floors are to be open grating type to allow the free flow of air. In general, floor plating is to be of an open type not to restrict the flow of air. In addition, a ventilating system is to be provided.

(2) Fan motors and fans

Fan motors are to be located outside of the pump room and outside of the ventilation ducts. Fans are to be of non-sparking construction. Provision is to be made for immediate shutdown of the fan motors upon release of the fire extinguishing medium.

Chapter 4
Electrical Installation

4.1 General

4.1.1 General

(a) The requirements of the present Part are applicable to the electrical installation intended for craft without special service limitations or restrictions. The Society may, however, modify the requirements in certain particular cases for their application to small craft, fishing vessels and craft with service limitations or restrictions.

(b) The Society is prepared to give special consideration to the novel features of design in respect of the electrical installation based on the best information available at the time.

(c) The electrical apparatus and the wiring system of a classed craft are to be constructed, installed and tested under the supervision and to the satisfaction of the Surveyor in accordance with the following requirements. Considerations will be given, however, to the arrangements or details of the equipment and machinery which comply with other recognized standards provided they are not less effective than the requirements of this Part.

(d) When applying the requirements of the following Chapters, the so-called essential auxiliaries are to be as specified in Chapter 1 of Part IV of CR Rules for Steel Ships.

(e) Passenger craft intended for classification are to be constructed in accordance with the requirements of the Society as well as those of Governmental and International Convention Regulations.

(f) For craft having an aggregate generator capacity less than 75 kW, the requirements contained in 4.18 are to be complied with. Where generators are not arranged for parallel operation, the capacity of the largest generator may be taken as the "aggregate generator capacity". Electrical installations in machinery spaces with gasoline engines will be specially considered.

(g) For craft less than 24 meters in length, the requirements contained in 4.20 are to be complied with.

4.1.2 Drawings and Data

(a) The builder or manufacturer is to submit the following drawings and data for approval before the work commences:
   (i) For propulsion machineries, generators and essential motors of 375 kW and over: – Complete rating, seating arrangements, assembly, shaft, stator and rotor details, electric propulsion coupling details, mass, main dimensions, main materials used, and data for calculation of critical speed.
   (ii) For generators below 375 kW: – Complete rating, seating arrangements, type of enclosure and dimensional outline.
   (iii) For essential motors over 15 kW but below 375 kW: – Complete rating, seating arrangements, type of enclosure and dimensional outline.
   (iv) For switchboards: – Arrangements and details, front view, installation arrangements and wiring diagram.

(v) For wiring: – All wiring plans and circuit diagrams including load distribution, wire size, type of cable, maximum temperature rise of conductor and voltage drop, type of insulation, rating or setting of circuit breaker, rating of fuse and switch, and interrupting capacity of circuit breaker and fuse.

(vi) For arrangement: – General arrangement of electric equipment including details of the main cable runs.

(b) The builder is to submit the following specification and data for approval before the work commences:

(i) Load analysis and protective device coordination study.

(1) A protective device coordination study is to be submitted for review. This protective device coordination study is to consist of an organized time-current study of all of the protective devices in series from the utilization equipment to the source for all circuit protection devices having different setting or time-current characteristics for long-time delay tripping, short-time delay tripping and instantaneous tripping, where applicable. Where an over-current relay is provided in series and adjacent to the circuit protection device, the operating and time-current characteristics of the relay are to be considered for coordination.

(2) The electric-plant load analysis is to cover all operating conditions of the craft, such as normal sea going, cargo handling (loading/unloading), harbor in/out, emergency,and dynamic positioning operations.

(ii) Calculations of short circuit currents at main, emergency and sub-switchboards including those fed from transformers.

(1) In order to establish that the protective devices on the main and emergency switchboards have sufficient short-circuit breaking and making capacities, data are to be submitted giving the maximum calculated short-circuit current in symmetrical rms and asymmetrical peak values available at the main bus bars together with the maximum allowable breaking and making capacities of the protective device. Similar calculations are to be made at other points in the distribution system, where necessary, to determine the adequacy of the interrupting capacities of the protective devices.

(iii) Explanation of electric propulsion system.

(iv) Maintenance schedule of battieries

4.1.3 Ambient Reference Conditions

(a) 45°C is to be considered the standard ambient temperature for the inside of the boiler or machinery space and 32°C is to be considered the standard temperature for the inlet of sea water. For other spaces, a temperature of 40°C is to be taken as the standard ambient temperature.

(b) The values as specified in the tables of limits of temperature rise in this Part are based on 45°C standard ambient temperature. For the ambient temperature of 40°C, these values may be increased by 5°C.

(c) Where the ambient temperature of a space is in excess of the values specified in 4.1.3(a) above, the permissible temperature rise of the machine or equipment installed in that space is to be reduced by an amount equivalent to the excess temperature.

4.1.4 Inclination of Craft

(a) Machines and apparatus are to operate satisfactorily under all conditions with the craft inclined up to the following angles from the normal:

athwartship,

static dynamic 15°

dynamic static 22.5°

fore-and-aft,

static dynamic 5°

dynamic static 7.5°

(b) Emergency machines and apparatus fitted in accordance with statutory requirements are to operate satisfactorily when the craft is inclined up to 22.5° and/or when the trim of the craft is 10°.

4.1.5 Quality of Electrical Power Supplies

(a) Voltage and Frequency Variations

All electrical equipment supplied from the main and emergency source of electrical power is to be so designed and manufactured that it is capable of operating satisfactorily under normally occurring variations of voltage and frequency.

Unless specified otherwise, A.C. electrical equipment, other than that supplied by battery systems, is to operate satisfactorily with the following simultaneous variations, from their nominal value, when measured at the consumer input terminals.

(i) voltage:

permanent variations +6%, –10%

transient variations ± 20%

recovery time 1.5 seconds

(ii) frequency:

permanent variations ±5%

transient variations ±10%

recovery time 5 seconds

Unless specified otherwise, D.C. electrical equipment is to operate satisfactorily with the following simultaneous variations, from their nominal value, when measured at the consumer input terminals,

(iii) When supplied by D.C. generators or rectified A.C. supply:

Voltage tolerance (continuous) ± 10%

Voltage cyclic variations deviation 5%

Voltage ripple (A.C. rms over steady state D.C. voltage) 10%

(iv) When supplied by batteries:

(1) Equipment connected to the batteries during charging:
Voltage tolerance +30%, -25%

(2) Equipment not connected to the batteries during charging:
Voltage tolerance +20%, -25%

Different voltage variations as determined by the charging/discharging characteristics, including ripple voltage from the charging device, may be considered. When battery chargers/battery combinations are used as D.C. power supply systems, adequate measures are to be taken to keep the voltage within the specified limits during charging, boost charging and discharging of the battery.

(b) Harmonics

Unless specified otherwise, the total harmonic distortion (THD) of the voltage waveform at any switchboard or section-board is not to exceed 8% for all frequencies up to 50 times the supply frequency and no voltage at a frequency above 25 times supply frequency is to exceed 1.5% of the supply voltage.

4.1.6 Location and Construction

(a) Electrical equipment is to be accessibly placed in well-ventilated and adequately lighted spaces where it is not exposed to risk of mechanical injury or damage arising from water, steam or oil. Where it is unavoidable to be exposed to such risks, the equipment is to be so constructed as to meet the conditions of the locations.

(b) Bolts, nuts, pins, screws, terminals, studs, springs and such other small parts are to be made of corrosion resistant materials or steel suitably protected against corrosion.

(c) Live parts are to be effectively shielded from any accidental contact when the voltage is above 250V D.C. or 150V, A.C.

(d) All electrical apparatus are to be so constructed and so installed that it does not cause injury when handled or touched in the normal manner.

(e) All electrical equipment is to be constructed of durable and flame-retardant materials. Materials are to be resistant to corrosion, moisture, high and low temperatures, and are to have other qualities necessary to prevent deterioration in the ambient conditions that the equipment may be expected to encounter.

(f) Insulation Material

Insulating materials are to be classified by their maximum continuous operating temperatures in accordance with the following table:

Class	Maximum Continuous Temperature (°C)
A	105
E	120
B	130
F	155
H	180

Materials or combination of materials which by experience or accepted tests can be shown to be capable of satisfactory operation at temperature over 180°C will also be considered. In this regard, supporting background information, reports, tests conducted, etc. ascertaining their suitability for the intended application and operating temperature is to be submitted for review.

(g) Equipment is not to remain alive through the control circuits and/or pilot lamps when switched off by the control switch. This does not apply to synchronizing switches and/or plugs.

(h) The operation of all electrical equipment and the lubrication arrangements are to be efficient under such conditions of vibration and shock as arise in normal practice.

(i) All nuts and screws used in connection with current-carrying parts and working parts are to be effectively locked to prevent loosening due to vibration.

(j) No electrical equipment is to be installed in any space where flammable mixtures are liable to collect including those on board oil tankers or in compartments assigned principally to accumulator batteries, in paint lockers, acetylene stores or similar spaces, unless the Society is satisfied that such equipment is:

(i) essential for operational purposes;

(ii) of a type which will not ignite the mixture concerned;

(iii) appropriate to the space concerned; and

(iv) appropriately certified for safe usage in the dusts, vapours or gases likely to be encountered.

(k) Generators and motors are preferably to be placed with their axis of rotation in the fore and aft direction of the craft. Where a machine is installed athwartships, it is to be ensured that the design of the bearings and the arrangements for lubrication are satisfactory to withstand the craft's inclination specified in 4.1.4.

(l) The electrical equipment exposed to the weather or located in spaces exposed to sea splashing or other severe moisture condition is to be of the waterproof type or protected by means of waterproof enclosure.

(m) Conductors and equipment are to be placed at such a distance from the magnetic compass or all to be so screened that the interfering external magnetic field is negligible, even when circuits are switches on and off.

4.1.7 Earthing

(a) Exposed metal parts of electrical machines or equipment which are not intended to be live but which are liable under fault conditions to become live are to be earthed unless the machines or equipment are:

(i) supplied at a voltage not exceeding 50 V direct current or 50 V, root mean square between conductors; auto-transformers are not to be used for the purpose of achieving this voltage; or

(ii) supplied at a voltage not exceeding 250 V by safety isolating transformers supplying only one consuming device; or

(iii) constructed in accordance with the principle of double insulation.

(b) Metal frames of all portable electric lamps, tools and similar apparatus supplied as unit's equipment and rated in excess of 50 V are to be earthed through a suitable conductor unless equivalent safety provisions are made such as by double insulation or by an isolating transformer.

(c) Where earthing connections are necessary, they are to be of copper or other approved material and are to be protected against damage and, where necessary, against electrolytic corrosion. Connections are to be so secured that they cannot work loose under vibration.

(d) In general, the nominal cross-section area of copper earthing conductor is to be equal to the cross-section of the current-carrying conductor up to 16 mm^2. Above this figure it is to be equal to at least half the cross-section of the current-carrying conductor with a minimum of 16 mm^2.

(e) The connection of the earthing conductor to the hull of the craft is to be made in an accessible position, and is to be secured by a screw or stud of diameter not less than 6 mm which is to be used for this purpose only. Bright metallic surfaces at the contact areas are to be ensured immediately before the nut or screw is tightened and, where necessary, the joint is to be protected against electrolytic corrosion. The connection is to remain unpainted.

4.1.8 Bonding for the Control of Static Electricity

(a) Bonding straps for the control of static electricity are required for cargo tanks, process plant and piping systems, for flammable products and solids liable to release flammable gas and/or combustible dust, which are not permanently connected to the hull of the craft either directly or via their bolted or welded supports and where the resistance between them and the hull exceeds 1 MΩ.

(b) Where bonding straps are required for the control of static electricity, they are to be robust, that is, having a cross-sectional area of about 10 mm^2, and are to comply with 4.1.7(c) and 4.1.7(e).

4.1.9 Clearances and Creepage Distances

(a) Clearances and creepage distances between live parts and between live parts and earthed metal, whether across surfaces or in air, are to be adequate for the working voltage having regard to the nature of the insulating material and the transient over-voltages developed by switch and fault conditions.

(b) Bare main bus bars in main and emergency switchboards, but not including the conductors between the main bus bars and the supply side of out- going units, are to have minimum clearances (in air) and creepage distances (across surfaces) as given in Table IV 4-1.

Table IV 4-1
Minimum Clearance and Creepage Distances

Rated insulation Voltage (V)	Minimum Clearances (mm)	Minimum Creepage Distances (mm)
Up to 250	15	20
Over 250 to 660	20	30
Over 660 to 1000	25	35

Notes:
(1) The values in this table apply to clearances and creepage distances between live parts as well as between live parts and exposed conductive parts, including grounding.
(2) System with nominal voltage exceeding 1 kV (phase to phase) is to comply with the requirements of high voltage system in 4.14.

4.1.10 Electrical Equipment for Use in Explosive Gas Atmospheres

(a) Where electrical equipment is installed in areas where explosive gas atmospheres may be present, it is to be of a "safe type", certified for the gases/ varpours involved. The construction and type testing is to be in accordance with IEC Publication 60079, Electrical Apparatus for Explosive Gas Atmospheres, or an equivalent national standard.

(b) Certified safe type equipment includes the following types of protection:

(i) Intrinsically safe – Ex "i".

An intrinsically safe equipment is one which is supplied by a low energy circuit which when sparking, produced normally by breaking or making the circuit or produced accidentally (i.e., by short circuit or earth-fault), is incapable under prescribed test conditions of causing ignition of a prescribed gas or vapor.

(ii) Increased safety – Ex "e"

Increased safety equipment is designed to give increased security against the possibility of excessive temperatures and the occurrence of arcs or sparks in electrical apparatus which does not produce arcs or sparks in normal service.

(iii) Flameproof – Ex "d"

Flameproof equipment is one which possesses an enclosure capable of withstanding, without damage, an explosion of a prescribed flammable gas or vapor within the enclosure and prevent the transmission of flame or sparks which would ignite the external prescribed flammable gas or vapor for which it is designed, and which normally operates at an external temperature that will not ignite the external prescribed flammable gas or vapor. A flameproof enclosure may not necessarily or ordinarily be weatherproof or dustproof.

(iv) Pressurized enclosure – Ex "p"

Pressured equipment is designed with an enclosure in which the entry of flammable gases or vapors is prevented by maintaining the air (or other non-flammable gas) within the enclosure at a specified pressure above that of the external atmosphere. Purged equipment is designed with an enclosure in which a sufficient flow of fresh air or inert gas is maintained through the enclosure to prevent the entry of any flammable gas or vapor which may be present in the ambient atmosphere.

(c) In addition, lighting fittings of the air driven type with pressurized enclosure are considered to be a ‘safe type’ of lighting fitting.

(d) When "safe type" equipment is permitted in hazardous zones or spaces all switches and protective devices are to interrupt all lines or phases and, where practicable, are to be located in a non-hazardous zone or space unless specifically permitted otherwise. Such equipment, switches and protective devices are to be suitably labeled for identification purposes.

(e) Paint stores or enclosed spaces leading to paint stores

In principle, within the paint store; open deck area within 1 m from ventilation inlet and natural ventilation outlet; and open deck area within 3 m from power ventilation outlet are to be regarded as hazardous areas.

(i) Electrical equipment is to be installed in paint stores and in ventilation ducts serving such spaces only when it is essential for operational services. Certified safe type equipment specified in 4.1.10.(b) of this chapter is acceptable.

(ii) Electrical equipment for use in paint stores is to have minimum explosion group IIB and temperature class T3.

(iii) In the areas on open deck within 1 m of inlet and exhaust ventilation openings of paint stores or 3 m of exhaust mechanical ventilation outlets of such spaces, following electrical equipment may be installed:

(1) Electrical equipment with the type of protection as permitted in paint stores.

(2) Appliances which do not generate arcs in service and whose surface does not reach unacceptably high temperature.

(3) Appliances with simplified pressurised enclosures or vapour proof enclosures (minimum class of protection IP55) whose surface does not reach unacceptably high temperature.

(4) Cables of armoured type or installed in metallic conduit are to be used.

(iv) Enclosed spaces giving access to paint stores may be considered as non-hazardous, provided that:

(i) The door to the paint store is a gastight door with self-closing devices without holding back arrangements.

(ii) The paint store is provided with an acceptable, independent, natural ventilation system ventilated from a safe area.

(iii) Warning notices are fitted adjacent to the paint store entrance stating that the store contains flammable liquids.

(f) Battery room

In principle, within the battery room; open deck area within 1 m from natural ventilation outlet, and open area within 3 m from power ventilation outlet are to be regarded as hazardous areas.

(i) Electric ventilator motors are to be outside ventilation ducts and, if within 3 m of the exhaust end of the duct, they are to be of an explosion-proof safe type. The impeller of the fan is to be of the non-sparking type.

(ii) Overcurrent protective devices are to be installed as close as possible to, but outside of, battery rooms.

(iii) Electrical cables other than those pertaining to the equipment arranged in battery rooms are not permitted.

(iv) Electrical equipment for use in battery rooms is to have minimum explosion group IIC and temperature class T1.

(g) Welding gas (Oxygen-acetylene) storage room

In principle, within the storage room; open deck area within 1 m from natural ventilation outlet, open area within 3 m from power ventilation outlet; and the area within 3 m of the gas cylinders pressure relief device discharge outlet are to be regarded as hazardous areas.

(i) Electric ventilator motors are to be outside ventilation ducts and, if within 3 m of the exhaust end of the duct, they are to be of an explosion-proof safe type. The impeller of the fan is to be of the non-sparking type.

(ii) Electrical equipment for use in oxygen-acetylene room is to have minimum explosion group IIC and temperature class T2.

4.1.11 Protection of Electrical Enclosures

Electrical equipment is to have a degree of enclosure for protection against the intrusion of foreign objects and liquids, appropriate for the location in which it is installed. The minimum degree of protection is to be in accordance with Table IV 4-2.

Table IV 4-2
Minimum Required Degree of Protection

Example of location	Condition in location	Equipment								
		Switchboard, control gear, motor starters	Generators	Motors	Transformers	Lighting fixtures	Heating appliances	Cooking appliances	Socket outlets	Accessories (e.g., switches, detector, connection boxes)
Dry accommodation spaces, dry control rooms	Danger of touching live parts only	IP20	-	IP20	IP20	IP20	IP20	IP20	IP20	IP20
Control rooms, wheel house, radio room	Danger of dripping liquid and/or moderate mechanical damage	IP22	-	IP22	IP22	IP22	IP22	IP22	IP22	IP22
Engine and boiler rooms above floor		IP22	IP22	IP22	IP22	IP22	IP22	IP22	IP44	IP44
Steering gear rooms		IP22	IP22	IP22	IP22	IP22	IP22	-	IP44	IP44
Emergency machinery rooms		IP22	IP22	IP22	IP22	IP22	IP22	-	IP44	IP44
General storerooms		IP22	-	IP22	IP22	IP22	IP22	-	IP22	IP44
Pantries		IP22	-	IP22	IP22	IP22	IP22	IP22	IP44	IP44
Provision rooms		IP22	-	IP22	IP22	IP22	IP22	-	IP44	IP44
Ventilation ducts		-	-	IP22	-	-	-	-	-	-
Bathroom and/or showers	Increased danger of liquid and/or mechanical damage	-	-	-	-	IP34	IP44	-	IP55	IP55
Engine and boiler rooms below floor		-	-	IP44	-	IP34	IP44	-	-	IP55
Closed fuel oil separator rooms		IP44	-	IP44	IP44	IP34	IP44	-	-	IP55
Closed lubricating oil separator rooms		IP44	-	IP44	IP44	IP34	IP44	-	-	IP55
Ballast pump rooms	Increased danger of liquid and mechanical damage	IP44	-	IP44(2)	IP44(2)	IP34	IP44	-	IP55	IP55
Refrigerated rooms		-	-	IP44	-	IP34	IP44	-	IP55	IP55
Galleys and laundries		IP44	-	IP44	IP44	IP34	IP44	IP44	IP44	IP44
Public bathroom and showers		-	-	IP44	IP44	IP34	IP44	-	IP44	IP44
Shaft or pipe tunnels in double bottom	Danger of liquid spraying, presence of cargo dust, serious mechanical damage, aggressive fumes	IP55	-	IP55	IP55	IP55	IP55	-	IP56	IP56
Holds for general cargo		-	-	IP55	-	IP55	IP55	-	IP56	IP56
Ventilation trunks		-	-	IP55	-	-	-	-	-	-
Open decks	Danger of liquid in massive quantities	IP56	-	IP56	-	IP55	IP56	-	IP56	IP56
Bilge wells	In water	-	-	-	-	IPX8	-	-	-	IPX8

Notes:

(1) The symbol "-" denotes equipment which it is not advised to install.

(2) Electric motors and starting transformers for lateral thruster propellers located in spaces similar to ballast pump rooms may have degree of protection IP22.

4.1.12 Testing and Inspection

(a) All generators, including emergency generators, motors, and other rotating machines for essential auxiliary services are to be tested in the presence of the Surveyor, preferably at the plant of the manufacturer.

(b) Shop tests of generators are to be carried out in accordance with Chapter 3 of Part VII of the Rules for Steel Ships.

(c) Shop tests of motors are to be carried out in accordance with Chapter 4 of Part VII of the Rules for Steel Ships.

(d) Switchboards are to be inspected in the presence of the Surveyor at the plant of the manufacturer in accordance with Chapter 5 of Part VII of the Rules for Steel Ships.

(e) Motor controllers are to be inspected in the presence of the Surveyor at the plant of the manufacturer in accordance with Chapter 9 of Part VII of the Rules for Steel Ships.

(f) The shaft material of generators and motors of 375 kW and over is to be tested in accordance with the requirements in Part XI of the Rules for the Steel Ships. For the shaft material of machines below 375 kW the manufacturer's certificate of material test is to be acceptable in each case provided the test record submitted by the manufacturer is satisfactory.

(g) Transformers are to be inspected in the presence of the Surveyor at the plant of the manufacturer in accrodance with Chapter 7 of the Rules for Steel Ships.

(h) Cables are to be inspected in the presence of the Surveyor at the plant of the manufacturer in accordance with Chapter 8 of the Rules for Steel Ships.

(i) Semiconductor equipments are to be inspected in the presence of the Surveyor at the plant of the manufacturer in accordance with Chapter 15 of the Rules for Steel Ships.

(j) Uninterruptible Power System are to be inspected in the presence of the Surveyor at the plant of the manufacturer in accordance with Chapter 18 of the Rules for Steel Ships.

(j) The electrical equipment for use in explosive gas atmospheres is to be approved and tested in the presence of the Surveyor.

4.2 System Design of Distribution and Circuit Protection

4.2.1 System Design - General

(a) Distribution systems

(i) The following distribution systems are considered as standard:

(1) Two-wire direct current.

(2) Three-wire direct current (three-wire insulated system or three-wire mid-wire earthed system).

(3) Two-wire, single-phase alternating current.

(4) Three-wire, three-phase alternating current.

(5) Four-wire, three-phase alternating current.

(ii) The voltage of electric supply is not to exceed:

(1) 500 V A.C. and D.C. for generators, power equipment, and heating and cooking equipment connected to fixed wiring.

(2) 250 V A.C. and D.C. for lighting, heaters in cabins and public rooms, equipment other than those specified in (i).

(3) 15,000 V A.C. and 1,500 V D.C. installations for electric propulsion.

(4) 15,000 V A.C. for A.C. generators and A.C. power equipment meeting the requirements in Chapter 14.

(iii) The hull return system of distribution is not to be used for any purpose for power, heating, or lighting in all craft, except the following:

(1) Impressed current cathodic protection systems for external hull protection.

(2) Limited and locally earthed systems, provided that any possible resulting current does not flow directly through any dangerous spaces.

(3) Insulation monitoring systems provided the circulation current does not exceed 30 mA under any circumstances.

Current-carrying parts with potential to earth are to be protected against accidental contact.

Where the hull return system is used, all final subcircuits (i.e., all circuits fitted after the last protective device) are to consist of two insulated wires, the hull return being achieved by connecting to the hull one of the bus bars of the distribution board from which they originate. The earth wires are to be in accessible locations to permit their ready examination and to enable their disconnection for testing of insulation.

(iv) Earthed distribution systems

System earthing is to be effected by means independent of any earthing arrangements of the non-current-carrying parts. Means of disconnection is to be provided in the neutral earthing connection of each generator so that the generator may be disconnected for maintenance. In distribution systems with neutral earthed or for generators intended to be run with neutrals interconnected, the machines are to be designed to avoid circulating currents exceeding the prescribed value. Transformer neutral is not to be earthed unless all corresponding generator neutrals are disconnected from the system (e.g. during shore supply).

(b) Insulation monitoring system

When a distribution system, whether primary or secondary, for power, heating or lighting, with no connection to earth is used, a device capable of continuously monitoring the insulation level to earth and of giving an audible or visual indication of abnormally low insulation values is to be provided.

(c) Unbalance of load

(i) Unbalance of loads between an outer conductor and the middle wire at the switchboards, section boards and distribution boards is not to exceed 15% of the full load current as far as possible.

(ii) Unbalance of loads on each phase at the switchboards, section boards and distribution boards is not to exceed 15% of the full load current as far as possible.

(d) Diversity factor

(i) Circuits supplying two or more final-subcircuits are to be rated in accordance with the total connected load subject, where justifiable, to the application of a diversity factor. Where spare ways are provided on a section or distribution board, an allowance for future increase of load is to be added to the total connected load before application of any diversity factor.

(ii) The diversity factor specified in (i) above may be applied to the calculation of the cross sectional area of conductors and ratings of switchgears (including circuit breakers and switches) and fuses.

(e) Feeder circuits

(i) Electric motors for essential services requiring dual arrangement are to be supplied by individual circuits without the use of common feeders, protective devices and control gears.

(ii) Auxiliaries, cargo gear motors and ventilating fans in the machinery space are to be independently supplied from switchboards or distribution boards.

(iii) Ventilating fans for the cargo hold and those for the accommodation spaces are not to be supplied from the common feeder circuits.

(iv) Lighting circuits and motor circuits are to be arranged to be supplied independently from the switchboards.

(v) A final sub-circuit of rating exceeding 15 A is not to supply more than one appliance.

(f) Motor circuits

A separate final sub-circuit is to be provided for every motor for essential service and for every motor of rating at 1 kW or more.

(g) Lighting circuits

(i) Lighting circuits are to be supplied by final sub-circuits separate from those for heating and power except cabin fans and electrical appliances for domestic use.

(ii) For a lighting circuit suppplied by a final sub-circuit of rating 15 A or less , the connected load is not to exceed the lesser of the rated current carrying capacity of the conductor or 80% of the overload protective device rating or setting.

(iii) In a final sub-circuit for panel lighting and electric signs, where lampholders are closely grouped, the maximum operating current in the sub-circuit should not exceed 10 A.

(iv) In spaces such as compartments where the main engine or boilers are provided, large machinery rooms, large galleys, corridors, stairways leading to boat-decks and public spaces, lighting is to be supplied from at least two circuits and to be so arranged that failure of any one circuit will not leave these spaces in darkness. One of the circuits may be emergency lighting circuit.

(v) Emergency lighting circuits are to be in accordance with the requirements in 4.11 of this Part.

(vi) Lighting for enclosed hazardous spaces is to be supplied from at least two final sub-circuits to permit light from one circuit to be retained while maintenance is carried out on the other.

(h) Circuits for internal communication systems and navigational aids

(i) Essential internal communication and signal systems and navigational aids are to have completely self-sustaining independent circuits for ensuring the perfect maintenance of their functions as far as possible.

(ii) Cables for communication systems are to be so arranged that no induced interference would be caused.

(iii) No switch is to be provided for feeder circuits of general alarm devices, except for operating switch. Where circuit breaker is used, suitable means are to be taken to prevent the breaker from being kept "off" position.

(i) Circuits for radio installation

Feeder circuits for radio installation are to be arranged in accordance with the requirements of relevant international and national regulations.

(j) Circuits for electric heating and cooking equipment

(i) Each item of electric heating and cooking equipment is to be connected to a separate final sub-circuit except that up to 10 small electric heaters of aggregate current rating not exceeding 15 A may be connected to single final sub-circuit.

(ii) Electric heating and cooking equipment are to be controlled by the multi-pole linked switches mounted in the vicinity of the equipment. However, small electric heaters connected to the final sub-circuit of rating not exceeding 15 A may be controlled by a single-pole switch.

(k) Circuits for shore connection

(i) Where arrangements are made for the supply of electricity from a source on shore, a connection box is to be installed in a suitable position. In case where shore connection cables can be drawn into a switchboard easily and put into service safely, the connection box may be omitted, provided that the protective devices and checking devices stipulated in (ii) are equipped on the switchboard.

(ii) The connection box is to contain terminals to facilitate a satisfactory connection and a circuit-breaker or an isolating switch with fuses. Means are to be provided for checking the phase sequence (for three-phase alternating current) or the polarity (for direct current).

(iii) In case where power is supplied from the three-wire neutral earthed system, an earth terminal is to be provided for connecting the hull to an appropriate earth in addition to those specified in (ii) above.

(iv) At the connection box a notice is to be provided giving information on the system of supply and nominal voltage (and frequency if A.C.) of system and the procedure for carrying out the connection.

(v) The cables between the connection box and the switchboard are to be permanently fixed and a pilot lamp for source and a switch or a circuit-breaker are to be provided on the switchboard.

(*l*) Disconnecting switch of circuits

(i) Power circuits and lighting circuits terminating in the cargo holds or coal bunkers are to be provided with the multipole linked switches situated outside these spaces. Provision is to be made for the complete isolation of these circuits and locking in the "off" position of the switches or switch boxes.

(ii) Feeder circuits for the electrical equipment installed in dangerous spaces are to be provided with multi-pole linked isolation switches in a safe space. In addition, the isolation switches are to be clearly labelled to identify the electrical equipment to be connected with.

(m) Remote stopping of ventilating fans and pumps

(i) Power ventilation of accommodation spaces, service spaces, cargo spaces, control stations and machinery spaces is to be capable of being stopped from an easily accessible position outside the space being served. This position is not be readily cut off in the event of a fire in the spaces served. The means provided for stopping the power ventilation of the machinery spaces is to be entirely separated from the means provided for stopping ventilation of other spaces.

(ii) The motors for the fuel oil burning pumps, fuel oil transfer pumps, fuel valve cooling oil pumps, thermal oil circulating pumps, lubricating oil service pumps, or other similar pumps, fuel oil purifiers, cargo oil pumps and forced and induced draught fans are to be capable of being stopped from an easily accessible position outside the space being served. This position is not to be readily cut off in the event of a fire in the space served.

(n) Fire detection and extinguishing systems

(i) Where an electrically driven fire pump is supplied from the emergency generator the supply to such pump is not to pass through the main machinery spaces. The cables are to be of a fire resistant type where they pass through high fire risk areas.

(ii) Electrical equipment used in operating fire detecting equipment is to be served by two exclusive circuits, reserved solely for this purpose, one fed from the main power source and one from an emergency power source. Such feeders are to be connected to an automatic change-over switch situated near to the fire detection panel.

4.2.2 System Design – Protection

(a) General

Installations are to be protected against accidental overcurrents including short-circuit. The protective devices are to provide complete and coordinated protection to ensure:

(i) Continuity of service under fault conditions through discriminative action of the protective devices to maintain supply to healthy circuits.

(ii) Elimination of the fault to reduce damage to the system and hazard of fire.

(b) Protection against overload

(i) Circuit-breakers and automatic switches provided for overload protection are to have tripping characteristics appropriate to the system. Fuses above 320 A are not to be used for overload protection, but may be used for short-circuit protection.

(ii) The rating or appropriate setting of the overload protection device for each circuit is to be permanently indicated at the location of the protection device.

(iii) The overload relays of circuit-breakers for generators and the setting of preferential trip relays are to be adjustable or, if of the non-adjustable type, are to be readily replaceable by others of different values.

(c) Protection against short-circuit

(i) Protection against short-circuit currents is to be provided by circuit-breakers or fuses.

(ii) The breaking capacity of every protective device is to be not less than the maximum value of the short-circuit current which can flow at the point of installation at the instant of contact separation.

(iii) The making capacity of every circuit-breaker or switch intended to be capable of being closed, if necessary, on short-circuit, is to be not less than the maximum value of the short-circuit current at the point of installation. On alternating current this maximum value corresponds to the peak value allowing for maximum asymmetry.

(iv) Every protective device or contactor not intended for short-circuit interruption is to be adequate for the maximum short-circuit current which can occur at the point of installation having regard to the time required for the short-circuit to be removed.

(v) The use of a circuit-breaker of breaking capacity less than the prospective short-circuit current at the point of installation is permitted, provided that it is preceded on the generator side by fuses, or by a circuit-breaker having at least the necessary breaking capacity. The generator breakers are not to be used for this purpose.

(vi) Circuit-breakers with fuses connected to the load side may be used where operation of the circuit-breaker and fuses is coordinated.

(vii) The characteristics of the arrangement is to be such that:

(1) When the short-circuit current is broken, the circuit-breaker on the load side is not be damaged and is to be capable of further service.

(2) When the circuit-breaker is closed on the short circuit current, the remainder of the installation is not to be damaged. However, it is admissible that the circuit-breaker on the load side may require servicing after the fault has been cleared.

(viii) In the absence of precise data, the following short circuit currents at the machine terminals are to be assumed:

(1) Direct current systems
Ten times full load current for generators that may be connected simultaneously.
Six times full load current for motors simultaneously in service.

(2) Alternating current systems
Ten times full load current for generators that may be connected simultaneously.
Three times full load current for motors simultaneously in service.
The value derived from the above is an approximation to the r.m.s. symmetrical fault current; the peak asymmetrical fault current may be estimated to be 2.5 times this figure (corresponding to a fault power factor of approximately 0.1).

(d) Protection of circuits

(i) Each pole and phase of all insulated circuits except neutral and equalizer circuits are to be provided with short-circuit protection.

(ii) All circuits liable to be overloaded are to be provided with overload protection as indicated below:

(1) Two-wire D.C. or single-phase A.C. system – at least one line or phase.

(2) Three-wire D.C. system – both outer lines.

(3) Three-phase, three-wire system – each phase.

(4) Three-phase, four-wire system – each phase.

(iii) Fuse, non-linked switch or non-linked circuit-breaker is not to be inserted in an earthed conductor and a neutral line.

(e) Protection of generators

(i) Generators are to be protected against short- circuit and overcurrent by a multi-pole circuit-breaker arranged to open simultaneously all insulated poles, or in the case of generators less than 25KW not arranged to run in parallel, may be protected by a multipole-linked switch with fuse or a circuit-breaker in each insulated pole. The overload protection is to be suitable to the thermal capacity of generators.The long-time over-current protection is not to exceed 15% above either the full-load rating of continuous rated machines or the overload rating of special-rated machines. Where generators are operated in parallel and essential machinery is electrically driven, arrangements are to be made to disconnect automatically the excess non-essential load when the generators are overloaded. If required, this preference tripping may be carried out in one or more stages. See 4.11.2.(b) of this Part.

(ii) Protection for Alternating Current (AC) Generators

(1) Short-time Delay Trip
Short-time delay trips are to be provided with circuit breakers for AC generators. The current setting of the short time delay trip is to be less than the steady state shortcircuit current of the generator.

(2) Parallel Operation
Where AC generators are arranged for parallel operation with other AC generators, the following protective devices are to be provided.

a) Instantaneous Trip

Instantaneous trips are to be installed and set in excess of the maximum short-circuit contribution of the individual generator where three or more generators are arranged for parallel operation. Alternative suitable protection, such as generator differential protection, which will trip the generator circuit breaker in the event of a fault in the generator or in the supply cable between the generator and its circuit breaker, would also be acceptable.

b) Reverse Power Protection .

Time-delayed reverse active power protection or other devices which provide adequate protection is to be provided. The setting of protective devices is to be in the range of 2% to 6% of the rated power for turbines and in the range of 8% to 15% of the rated power for diesel engines. A setting of less than 8% of the rated power of diesel engines may be allowed with a suitable time delay recommended by the diesel engine manufacturer. A fall of 50% in the applied voltage is not to render the reverse power protection inoperative, although it may alter the setting to open the breaker within the above range.

c) Undervoltage Protection.

Means are to be provided to prevent the generator circuit breaker from closing if the generator is not generating and to open the same when the generator voltage collapses.

In the case of an undervoltage release provided for this purpose, the operation is to be instantaneous when preventing closure of the breaker, but is to be delayed for discrimination purposes when tripping a breaker.

(iii) Protection for Direct Current (DC) Generators

(1) Instantaneous Trip
DC generator circuit breakers are to be provided with an instantaneous trip set below the generator maximum short-circuit current and are to coordinate with the trip settings of feeder circuit breakers supplied by the generator.

(2) Parallel operation

a) Reverse current protection

DC generators arranged for parallel operation with other DC generators or with an accumulator battery are to be provided with instantaneous or short-time delayed reverse current protection. The setting of the protection devices is to be within the power range specified by 4.2.2.(e).(ii).(2).a). When an equalizer connection is provided, the reverse

current device is to be connected on the pole opposite to the equalizer connection where the series compound winding for the generator is connected. Reverse current protection is to be adequate to deal effectively with reverse current conditions emanating from the distribution system (e.g., electric driven cargo winches).

b) Generator Ammeter Shunts.

Generator ammeter shunts are to be so located that the ammeters indicate total generator current.

c) Undervoltage Protection.

Requirements for AC generator in 4.2.2.(e).(ii).(2).c)are also applicable to DC generator.

(f) Protection of feeder circuits

(i) All feeder circuits are to be protected in accordance with the current carrying capacities. Feeder and branch circuits for lighting, heating or craft's service power are to have each ungrounded conductor protected by circuit breaker or fuses of suitable interrupting capacity.

(ii) Supply circuits to section boards, distribution boards, grouped starters and the similar are to be protected against overload and short-circuit by multi-pole circuit-breakers or fuses. In case where the fuses are used, the switches which are capable of breaking and making safely a load current equal to 150% of their rated current at the rated voltage are to be provided at the power source side of the fuses.

(iii) Each insulated pole of the final sub-circuits is to be protected against short-circuit or overload by a circuit breaker or fuse. For the protection of supply circuits of the steering gears, the requirements in 4.2.3 of this Part are to apply.

(iv) Circuits which supply motors fitted with overload protection may be provided with short-circuit protection only.

(v) Where fuses are used to protect polyphase A.C. motor circuits, consideration is to be given to protection against single phasing.

(vi) Where condensers for phase advance are used, over-voltage protective devices are to be installed as required.

(g) Protection of Electric Motors

(i) Motors of rating exceeding 0.5 kW and all motors for essential services, except the motors for steering gears, are to be protected individually against overload. The overload protection of motors for the steering gears is to comply with the requirements in 4.2.3(b) of this Part.

(ii) The protective device is to have a delay characteristics to enable the motor to start.

(iii) For motors for intermittent services, the current setting and the delay are to be chosen in relation to the load factor of the motor.

(iv) Over current trips of circuit breakers or fuses are to have a rating not greater than the allowable carrying capacity of the conductors protected except that for motor branch circuits the ratings may be increased.

(v) The maximum setting of the circuit breaker trip element for motor branch circuit is to be the standard value equal to or, if not in exact agreement, next above the value stated below in percent motor full load current.

D.C. motor	150%
A.C. motor:	
Full voltage, reactor or resister starting	250%
Autotransformer starting	200%
Wound rotor	150%

(vi) Undervoltage Protection and Undervoltage Release

Undervoltage protection is to be provided for motors having power rating exceeding 0.5 kW to prevent undesired restarting upon restoration of the normal voltage, after a stoppage due to a low voltage condition or voltage failure condition.

Undervoltage release is to be provided for the following motors unless the automatic restart upon restoration of the normal voltage will cause hazardous conditions:

(1) Primary essential services (See 1.3.2 of Part IV of the Rules for Steel Ships).

(2) Only those secondary essential services necessary for safety (See 1.3.3 of Part IV of the Rules for Steel Ships), such as:

a) Fire pumps and other fire extinguishing medium pumps.

b) Ventilating fans for engine and boiler rooms where they may prevent the normal operation of the propulsion machinery.

Undervoltage protection is to be provided for ventilation fans for engine and boiler room, which are supplied by an emergency source of power for the purpose of removing smoke from the space after a fire has been extinguished.

Special attention is to be paid to the starting currents due to a group of motors with undervoltage release controllers being restarted automatically upon restoration of the normal voltage. Means such as sequential starting is to be provided to limit excessive starting current, where necessary.

(h) Protection of power and lighting transformers

The primary circuits of power and lighting transformers are to be protected against short-circuit and overcurrent by multi-pole circuit-breakers or fuses.

When transformers are arranged to operate in parallel, a means of isolation is to be provided on the secondary circuits.

(i) Protection of lighting

Lighting circuits are to be protected against short-circuit and overload.

(j) Protections of meters, pilot lamps and control circuits

(i) Protection is to be provided for voltmeters, voltage coils of measuring instruments, earth indicating devices and pilot lamps together with their connecting leads by means of fuses fitted to each insulating pole.

(ii) A pilot lamp installed as an integral part of another item of equipment need not be individually protected, provided that any damage of pilot lamp circuit does not cause failures on the supply to essential equipment.

(iii) Insulated wires for control and instrument circuits directly led from busbars and generator mains are to be protected by fuses at the nearest location to the connecting points. Insulated wires between the fuses and the connecting points are not to be bunched together with the wires for other circuits.

(iv) Fuses in circuits such as those of automatic voltage regulators where loss of voltage might have serious consequences may be omitted. If omitted, proper means are to be provided to prevent risk of fire in the unprotected part of the installation.

(k) Protection of batteries

Accumulator batteries other than engine starting batteries are to be protected against overload and short-circuit with devices placed as near as practicable to the batteries. Emergency batteries supplying essential services may have short-circuit protection only.

4.2.3 Electric Power and Control Circuits for Steering Gear

(a) Short circuit protection, an overload alarm and, in the case of polyphase circuits, an alarm to indicate single phasing is to be provided for each main and auxiliary motor circuit.

(b) Only short circuit protection is to be provided for the steering circuit on the switchboard or emergency switchboard. The setting values are to be as follows:

(i) For D.C. circuit

(1) On the main switchboard:
300 to 375% of the motor rating .

(2) On the emergency switchboard:
Not less than 200% of the motor rating.

(ii) For A.C. circuit breaker on all switchboard

200% of the steady state locked rotor current of one steering gear motor plus all other loads that may be on this feeder.

(c) Indicators for running indication of each main and auxiliary motor are to be installed on the navigating bridge and at a suitable main machinery control position.

(d) Two exclusive circuits are to be provided for each electric or electrohydraulic steering gear arrangement consisting of one or more electric motors.

(e) Each of these circuits is to be fed from the main switchboard. One 1 of these circuits may pass through the emergency switchboard.

(f) One of these circuits may be connected to the motor of an associated auxiliary electric or electro hydraulic power unit.

(g) Each of these circuits is to have adequate capacity to supply all the motors which can be connected to it and which can operate simultaneously.

(h) These circuits are to be separated throughout their length as widely as is practicable.

(i) In craft of less than 1,600 gross tonnage, if an auxiliary steering gear is not electrically powered or is powered by an electric motor primarily intended for other services, the main steering gear may be fed by one circuit from the main switchboard. Consideration will be given to other protective arrangements than described in 4.2.3.(a) above for such a motor primarily intended for other services.

(j) Power from either the emergency source of power or from a source of power located within the steering gear compartment is to be provided automatically within 45 seconds for all craft having a required rudder stock of over 230 mm diameter in way of the tiller. This source of power is to be capable of moving the rudder from 15° on one side to 15° on the other side in not more than 60 seconds with the craft at its deepest seagoing draught while running ahead at $\frac{1}{2}$ of the maximum ahead service speed or 7 knots, whichever is the greater. In every craft of 10,000 gross tonnage and upward, the capacity is to be sufficient for at least 30 minutes of continuous operation and in any other craft for at least 10 minutes of continuous operation.

(k) Electric control systems are to be independent and separated as far as is practicable throughout their length.

(l) Each main and auxiliary electric control system which is to be operated from the navigating bridge is to comply with the following:

(i) It is to be served with electric power by a separate circuit supplied from the associated steering gear power circuit, from a point within the steering gear compartment, or directly from the same section of switchboard busbars, main or emergency, to which the associated steering gear power circuit is connected.

(ii) Each separate circuit is to be provided with short circuit protection only.

(m) Monitoring and alarms

Alarms and monitoring requirements are indicated in Table IV 4-3.

Table IV 4-3
Monitoring and Alarms for Steering Gear

Item	Alarm	Note
Rudder position	–	Indication
Steering gear power units, power	Failure	–
Steering gear motors	Overload, single phase	Also running indication on bridge and machinery control station, see 2.3.3 of this Part
Control system Power	Failure	–
Steering gear hydraulic oil tank level	Low	Each tank to be monitored
Auto pilot	Failure	Running indication

4.2.4 Navigation Lights

(a) Navigation Light means the following lights:

(i) masthead light, sidelights, sternlight, towing light, all-round light, flashing light as defined in Rule 21 of Convention on the International Regulations for Preventing Collisions at Sea 1972 as amended;

(ii) all-round flashing yellow light required for air-cushion vessels by Rule 23 of Convention on the International Regulations for Preventing Collisions at Sea 1972 as amended; and

(iii) maneuvering light required by Rule 34(b) of Convention on the International Regulations for Preventing Collisions at Sea 1972 as amended.

(b) Navigation lights are to be connected separately to a special distribution board which is not to supply any other group. This distribution board is to be placed in an accessible position to the officers of the watch.

(c) The navigation distribution board is to be provided with a change over switch making it possible to obtain supply for this board from the ship's main and emergency sources of electrical power, and each navigation light is to be protected by a fuse switch on each insulated pole fitted on the distribution board.

(d) Each navigation light is to be provided with an automatic indicator giving audible and visible warning in the event of extinction of the light. This requirement may be modified for tugs, trawlers of fishing and small ships.

4.2.5 Internal Communication

(a) Internal communication circuits such as the engine room telegraph, revolution counter, rudder angle indicator, alarm system (automatic or manual), siren, bell, telephone and loud speaker installation, signal lighting system, electric log, remote temperature control, indication system, etc. are to comply with the following requirements.

(b) The supply source of the internal communication system may be derived from the general lighting and power sources or from the motor-generator, transformer, storage battery and dry cell for the low voltage system.

(c) Electric interior communication and signal systems forming part of the essential operating systems of the craft are to be as independent and self-sustaining as possible.

(d) The voltage of supply for internal communication circuits is to be between 20V and 120V of D.C. or A.C. For simple circuits, voltages of not less than 6V may be used.

(e) Communication circuits other than those supplied from the primary battery are to be protected on such insulated pole by the fuse of a current rating of the cables to be protected.

(f) Cables used for the internal communication are to be suitable for the rated voltage and the current of the connected load. The voltage drop is to be so limited that the normal operation of the connected equipment is ensured. Cables are to be kept separate from the power and lighting unless they are of similar type.

(g) A general emergency alarm system complying with the requirement of following is to be provided to summon passenger and crew to muster stations and initiate the actions included in the muster list. The system is to be supplemented by either a public address system in accordance with 4.2.5 (k) or other suitable means of communication. Any entertainment sound system is to be automatically turned off when the general emergency alarm is activated.

(i) The general emergency alarm system is to be capable of sounding the general emergency alarm signal consisting of seven or more short blasts followed by one long blast on the craft's whistle or siren and additionally on an electrically operated bell or klaxon or other equivalent warning system, which is to be powered from the craft's main supply and the emergency source of electrical power required by 4.11.3 or 4.11.4. The supply is to be provided by separate feeders reserved soley for that purpose. The system is to be capable of operation from the navigation bridge and, except for the craft's whistle, also from other strategic points. The system is to be audible throughout all the accommodation and normal crew working spaces. The alarm is to continue to function after it has been triggered until it is manually turned off or is temporarily interrupted by a message on the public address system.

(ii) The minimum sound pressure levels for the emergency alarm tone in interior spaces are to be 80 dB(A) and at least 10 dB(A) above ambient noise levels existing during normal equipment operation with the craft underway in moderate weather. In cabins without a loud speaker installation, an electronic alarm transducer is to be installed, eg. a buzzer or similar.

(iii) The sound pressure levels at the sleeping position in cabins and in cabin bathrooms are to be at least 75dB(A) and at least 10 dB(A) above ambient noise levels.

(h) An engine order telegraph system is to be provided for communicating orders from the navigating bridge to the main propulsion control station in the engine room, and for transmitting acknowledgement of orders from the main propulsion control station to the navigating bridge.

(i) A common talking means of voice communication and calling is to be provided between the navigating bridge, main propulsion control station, and the steering gear compartment so that the simultaneous talking among these spaces is possible at all times and the calling to these spaces is always possible even if the line is busy. Where an elevator is installed, a telephone is to be permanently installed in all cars and connected to a continuously manned area. These systems are to be independent of the craft's service electrical system.

(j) A common talking means of voice communication and calling or engine order telegraph repeater is to be provided between the main propulsion control station and local control positions for main propulsion engines and controllable pitch propellers. Voice communication systems are to provide the capability of carrying on a conversation while the craft is being navigated. These systems are to be independent of the craft's service electrical system and the control monitoring, and alarm circuits but may be combined with the system required in 4.2.5 (i) above.

(k) A public address system is to be provided to supplement the general emergency alarm required by 4.2.5 (g), unless other suitable means of communication is provided. Tthe public address system is to comply with the following:

(i) The system is to be a loud speaker installation enabling the broadcast of messages to all spaces where crew members or passengers, or both, are normally present and to muster stations. The system is to provide for the broadcast of messages from the navigation bridge and other places on board as may be required by the Society, with an override function so that all emergency messages may be broadcast if any loudspeaker in the spaces concerned has been turned off, its volume has been turned down or the public address system is in used for other purpose. The system is to be installed with regard to acoustically marginal conditions and is not to require any action from the addressee. The system is to be protected against unauthorized use.

(ii) With the craft underway in normal conditions, the minimum sound pressure levels for broadcasting emergency announcements in interior spaces are to be 75 dB(A) and at least 20 dB(A) above the corresponding speech interference level; and in exterior spaces are to be 80 dB(A) and at least 15 dB(A) above the corresponding speech interference level.

(iii) The system is to be connected to the emergency source of power.

(iv) Where a single system for both public address and general emergency alarm functions , the system is to be arranged so that single failure is not to cause the loss of both systems and is to minimize the effect of a single failure. The major system components, such as power supply unit, amplifier, alarm tone generator,etc.,are to be duplicated. Power supply is to comply with 4.2.5 (g)(i).
For cargo craft, the coverage provided by the arrangement of the system loops and speakers is to be such that after a single failure, the announcements and alarms are still audible in all spaces. Duplication of system loops and speakers in each room or space is not required provided the announcements and alarms are still audible in all spaces.
For passenger craft, a single system serving for both public address and general emergency alarm functions would still be required to have at least two loops sufficiently separated throughout their length with two separate and independent amplifiers.

(l) Engineers’ alarm

On craft of 500 gross tons and over, an engineers' alarm operable from the centralized propulsion machinery control station in the engine room or at the propulsion machinery local control position, as appropriate, is to be provided.

(m) Refrigerated Space Alarm

Fan and diffuser rooms serving subfreezing compartments are to be provided with a device capable of activating an audible and visual alarm in a manned control center and operable from within the latter space for the protection of personnel.

(n) Elevator

A device which will activate an audible and visual alarm in a manned control center is to be provided in all cars. Such alarm system is to be independent of power and control systems of the elevator.

4.2.6 Speical requirement for non-metallic craft

The following is applicable to non-metallic craft:

(a) Bonding of Metal Parts

In order to minimize the risk of fire, structural damage, electrical shock and radio interference due to lighting strike or electrostatic discharge, all metal parts of the craft should be bonded together, in so far as possible in consideration of galvanic corrosion between dissimilar metals, to form a continuous electrical system, suitable for the earth return of electrical equipment and to connect the craft to the water when waterborne. The bonding of isolated components inside the structure is not generally necessary, except in fuel tanks.

(b) Pressure Refueling Points

Each pressure refueling point should be provided with a means of bonding the fueling equipment to the craft.

(c) Metallic Pipes

Metallic pipes capable of generating electrostatic discharges, due to the flow of liquids and gases should be bonded so as to be electrically continuous throughout their length and should be adequately earthed.

(d) Primary Conductors for Lightning Discharge

Primary conductors provided for lightning discharge currents should have a minimum cross-section of 50 mm^2 in copper or equivalent surge-carrying capacity in aluminum.

(e) Secondary Conductors

Secondary conductors provided for the equalization of static discharges, bonding of equipment, etc., but not for carrying lighting discharges should have a minimum cross section of 6.5 mm^2 copper or equivalent surge current carrying capacity in aluminum.

(f) Electrical Resistance and Cross Section of Bonding Path

The electrical resistance between bonded objects and the basic structure should not exceed 0.05 Ohms except where it can be demonstrated that a higher resistance will not cause a hazard. The bonding path should have sufficient cross-sectional area to carry the maximum current likely to be imposed on it without excessive voltage drop.

(g) Lightning Protection System

A lightning protection system consisting of a copper spike, a conductor of a minimum cross-section per 4.2.6.(d) above and a grounding plate of not less than 450 cm^2 is to be installed. The spike is to project at least 150 mm above the uppermost part of the craft, the conductor is to run clear of metal objects and as straight as practicable, and the grounding plate is to be located so that it is immersed under all conditions of heel.

4.3 Generators

4.3.1 Generators are to be in accordance with the requirements of Chapter 3 of Part VII of the Rules for Steel Ships.

4.4 Motors

4.4.1 Motors are to be in accordance with the requirements of Chapter 4 of Part VII of the Rules for Steel Ships.

4.5 Switchboards and Mounted Equipment

4.5.1 Switchboards and Mounted Equipment are to be in accordance with the requirements of Chapter 5 of Part VII of the Rules for Steel Ships.

4.6 Batteries

4.6.1 Batteries are to be in accordance with the requirements of Chapter 6 of Part VII of the Rules for Steel Ships.

4.7 Transformers

4.7.1 Transformers are to be in accordance with the requirements of Chapter 7 of Part VII of the Rules Steel Ships.

4.8 Cables

4.8.1 Cables are to be in accordance with the requirements of Chapter 8 of Part VII of the Rules for Steel Ships.

4.9 Motor Controllers

4.9.1 Motor Controllers are to be in accordance with the requirements of Chapter 9 of Part VII of the Rules for Steel Ships.

4.10 Accessories and Lighting Equipment

4.10.1 Accessories and Lighting Equipment are to be in accordance with the requirements of Chapter 10 of Part VII of the Rules for Steel Ships.

4.11 Main Source and Emergency Source of Electrical Power

4.11.1 General

(a) This chapter specifies the requirements for the design of installations of main source of electrical power and emergency source of electrical power.

(b) Electrical installations are to comply with the following:

(i) All electrical auxiliary services necessary for maintaining the craft in normal operational and habitable conditions and other electrical services as deemed necessary by the Society will be ensured without recourse to the emergency source of electrical power;

(ii) Electrical services essential for safety will be ensured under various emergency conditions; and

(iii) The safety of passengers, crew and craft from electrical hazards will be ensured.

4.11.2 Main Source of Electrical Power and Lighting Systems

(a) Main source of electrical power

(i) A main source of electrical power of sufficient capacity to supply all those services specified in 4.11.1 (b) (i) is to be provided. This main source of electrical power is to consist of at least two generating sets.

(ii) The capacity of these generating sets is to be such that in the event of any one generating set being stopped it will still be possible to supply those services necessary to provide normal operational conditions of propulsion and safety and other electrical services as deemed necessary by the Society. Minimum comfortable conditions of habitability is also to be ensured which include at least adequate services for cooking, heating, domestic refrigeration, mechanical ventilation, sanitary and fresh water.

(iii) The arrangements of the craft's main source of electrical power are to be such that the services referred to the requirement in 4.11.1(b)(i) can be maintained regardless of the speed and direction of the propulsion machinery or shafting.

(iv) The generating sets are to be such as to ensure that with any one generator or its primary source of power out of operation, the remaining generating sets are to be capable of providing the electrical

services necessary to start the main propulsion plant from a dead craft condition. The emergency source of electrical power may be used for the purpose of starting from a dead craft condition if its capability either alone or combined with that of any other source of electrical power is sufficient to provide at the same time those services required to be supplied by the requirements in 4.11.3(f)(i)(1) to (3), 4.11.3(f)(ii)(1) to (4) or 4.11.4(f)(i) to (iv).

(v) Where the main source of electrical power is necessary for propulsion and steering of the craft, the system is to be so arranged that the electrical supply to equipment necessary for propulsion and steering and to ensure safety of the craft will be maintained or immediately restored in the case of loss of any one of the generators in service.

(b) Power management

(i) Arrangements are to be made to disconnect automatically, after an appropriate time delay, circuits of the categories noted in (ii), when the generator(s) is/are over loaded, are sufficient to ensure the connected generating set(s) not be overloaded;

(ii) The circuits that may be disconnected by the load shedding system are:

(1) Non-essential circuits.

(2) Circuits feeding services for habitability, such as cooking, heating, domestic refrigeration, mechanical ventilation, sanitary and fresh water.

(iii) If required this load shedding may be carried out in one or more stages in which case the non-essential circuits are to be included in the first group to be disconnected.

(iv) Consideration is to be given to provide means to inhibit automatically the starting of large motors, or the connection of other large loads, until sufficient generating capacity is available to supply them.

(c) Number and ratings of transformers

Where transformers constitute an essential part of the electrical supply system required by 4.11.2 (a), the system is to be so arranged as to ensure the same continuity of the supply as is stated in 4.11.2 (a).

(d) Lighting systems

(i) A main electric lighting system supplied from the main source of electrical power is to be provided in spaces or compartments where crew and personnel use and normally work on duty.

(ii) The main electric lighting system is to be so arranged as not to be impaired in the event of a fire or other casualty in spaces containing the emergency source of electrical power, associated transforming equipment, the emergency switchboard and the emergency lighting switchboard.

(iii) Emergency lighting is to provide sufficient illumination necessary for the safety as the requirements in 4.11.3 (f) (i) (1) , 4.11.3.(f) (ii) (1), or 4.11.4 (f) (i).

(iv) The emergency electric lighting system is to be so arranged as not to be impaired in the event of a fire or other casualty in spaces containing the main source of electrical power, associated transforming equipment, the main switchboard and the main lighting switchboard.

(e) Location of main switchboard.

The main switchboard and one main generating station are to be located in a same space. However, the main switchboard may be separated from the generators by an environmental enclosure, such as may be provided by a machinery control room situated within the main boundaries of the space.

4.11.3 Emergency Source of Electrical Power in Passenger Craft

(a) A self-contained emergency source of electrical power is to be provided.

(b) The emergency sources of electrical power, associated transforming equipment, if any, transitional source of emergency power, emergency switchboard and emergency lighting switchboard are to be located above the uppermost continuous deck and are to be readily accessible from the open deck. They are not to be located forward of the collision bulkhead.

(c) The location of the emergency source of electrical power and associated transforming equipment, if any, the transitional source of emergency power, the emergency switchboard and the emergency electric lighting switchboards in relation to the main source of electrical power, associated transforming equipment, if any, and the main switchboard are to be such as to ensure to the satisfaction of the Society that a fire or other casualty in spaces containing the main source of electrical power, associated transforming equipment, if any, and the main switchboard or in any machinery space of category A is not to interfere with the supply, control and distribution of emergency electrical power. As far as practicable, the spaces containing the emergency source of electrical power, associated transforming equipment, if any, the transitional source of emergency electrical power and the emergency switchboard are not to be contiguous to the boundaries of machinery spaces of category A or those spaces containing the main source of electrical power, associated transforming equipment, if any, or the main switchboard. Where this is not practicable, the contiguous boundaries are to be Class A60.

(d) Provided that suitable measures are taken for safeguarding independent emergency operation under all circumstances, the emergency generator may be used exceptionally, and for short periods, to supply non-emergency circuits.

(e) Alternative to Emergency Source of Power

Where the main source of electrical power is located in two or more compartments which are not contiguous, each of which has its own self-contained systems, including power distribution and control systems, completely independent of each other and such that a fire or other casualty in any one of the spaces will not affect the power distribution from the others, or to the services required by 4.11.3(f) (i) or 4.11.3(f) (ii), the requirements of 4.11.3 (a), 4.11.3 (b) and 4.11.3 (d) may be considered satisfied without an additional emergency source of electrical power, provided that:

(i) There is at least one generating set, meeting the requirements of 4.11.3.(n) and of sufficient capacity to meet the requirements of 4.11.3(f) (i) or 4.11.3(f) (ii) in each of at least two noncontiguous spaces;

(ii) The arrangements required by 4.11.3 (e) in each such space are equivalent to those required by 4.11.3 (g)(i), 4.11.3 (i), (j), (k), (l), (m), and 4.11.5 so that a source of electrical power is available at all times to the services required by 4.11.3(f) (i) or 4.11.3(f) (ii); and

(iii) The generator sets referred to in 4.11.3 (e) (i) and their self-contained systems are installed such that one of them remains operable after damage or flooding in any one compartment

(f) The electrical power available is to be sufficient to supply all those services that are essential for safety in an emergency, due regard being paid to such services as may have to be operated simultaneously. The emergency source of electrical power is to be capable, having regard to starting currents and the transitory nature of certain loads, of supplying simultaneously at least the following services for the periods specified hereinafter, if they depend upon an electrical source for their operation:

(i) Category A Craft

(1) For a period of 5 hours, emergency lighting:

a) At the stowage positions of life-saving appliances;

b) At all escape routes such as alleyways, stairways, exits from accommodation and service spaces, embarkation points, etc;

c) In the public spaces;

d) In the machinery spaces and main emergency generating spaces, including their control positions;

e) In control stations;

f) At the stowage positions for fireman's outfits; and

g) At the steering gear.

(2) For a period of 5 hours

a) Main navigation lights, except for ”not under command” lights;

b) Electrical internal communication equipment for announcements for passengers and crew required during evacuation;

c) Fire-detection and general alarm system and manual fire alarms; and

d) Remote control devices of fire-extinguishing systems, if electrical.

(3) For a period of 4 hours of intermittent operation:

a) The daylight signaling lamps, if they have no independent supply from their own accumulator battery; and

b) The craft's whistle, if electrically driven; spaces, embarkation points, etc.

(4) For a period of 5 hours:

a) Craft radio facilities and other loads as set out in 14.13.2 of the IMO's International Code of Safety for High-speed Craft; and

b) Emergency control monitoring systems

(5) For a period of 10 hours:

a) The “not under command” lights.

(6) For a period of 10 minutes continuous operations:

Steering gear to comply with 4.2.3 (j) if powered from the emergency

(ii) Category B Craft

The electrical power available is to be sufficient to supply all those services that are essential for safety in an emergency, due regard being paid to such services as may have to be operated simultaneously. The emergency source of electrical power is to be capable, having regard to starting currents and the transitory nature of certain loads, of supplying simultaneously at least the following services for the periods specified hereinafter, if they depend upon an electrical source for their operation:

(1) For a period of 12 hours, emergency lighting:

a) At the stowage positions of life-saving appliances;

b) At all escape routes such as alleyways, stairways, exits from accommodation and servicespaces, embarkation points, etc;

c) In the passenger compartments;

d) In the machinery spaces and main emergency generating spaces, including their control positions;

e) In control stations;

f) At the stowage positions for fireman's outfits; and

g) At the steering gear.

(2) For a period of 12 hours

a) The navigation lights and other lights required by the International Regulations for Preventing Collisions at Sea in force;

b) Electrical internal communication equipment for announcements for passengers and crew required during evacuation;

c) Fire-detection and general alarm system and manual fire alarms; and

d) Remote control devices of fire-extinguishing systems, if electrical.

(3) For a period of 4 hours of intermittent operation:

a) The daylight signaling lamps, if they have no independent supply from their own accumulator battery; and

b) The craft's whistle, if electrically driven; spaces, embarkation points, etc.

(4) For a period of 12 hours:

a) The navigational equipment as required by Chapter 13 of the IMO's International Code of Safety for High-speed Craft. Where such provision is unreasonable or impracticable, the Administration may waive this requirement for craft of less than 5,000 GT;

b) Essential electrically powered instruments and controls for propulsion machinery, ifalternate sources of power are not available for such devices;

c) One of the fire pumps required by Governmental Regulations;

d) The sprinkler pump and drencher pump, if fitted;

e) The emergency bilge pump and all the equipment essential for the operation of electrically powered remote controlled bilge valves; and

f) Craft radio facilities and other loads as set out in 14.13.2 of the IMO's International Code of Safety for High-speed Craft.

(5) For a period of 30 minutes:

a) Any watertight doors to be power-operated, together with their indicators and warning signals.

(6) For a period of 10 min continuous operations:

a) Steering gear to comply with 4.2.3 (j) if powered from the emergency.

(g) The emergency source of electrical power may be either a generator or an accumulator battery, which is to comply with the following:

(i) Where the emergency source of electrical power is a generator, it is to be:

(1) driven by a suitable prime-mover with an independent supply of fuel having a flashpoint (closed cup test) of not less than 43°C;

(2) started automatically upon failure of the electrical supply from the main source of electrical power and is to be automatically connected to the emergency switchboard; those services referred to 4.11.3 (h) of this Part are then to be transferred automatically to the emergency generating set. The automatic starting system and the characteristic of the prime-mover are to be such as to permit the emergency generator to carry its full rated load as quickly as is safe and practicable, subject to a maximum of 45 seconds; and

(3) provided with transitional source of emergency electrical power according to 4.11.3 (h)of this Part.

(ii) Where the emergency source of electrical power is an accumulator battery, it is to be cable of:

(1) carrying the emergency electrical load without recharging while maintaining the voltage of the battery throughout the discharge period within 12% above or below its nominal voltage;

(2) automatically connecting to the emergency switchboard in the event of failure of the main source of electrical power; and

(3) immediately supplying at least those services specified in 4.11.3 (h) of this Part.

(iii) Where electrical power is necessary to restore propulsion, the capacity is to be sufficient to restore propulsion to the craft in conjunction with other machinery, as appropriate, from a dead craft condition within 30 minutes after blackout.

(h) The transitional source of emergency electrical power required by 4.11.3 (g) (i) (3) above is to consist of an accumulator battery suitable located for use in an emergency which is to operate without recharging while maintaining the voltage of the battery throughout the discharge period within 12% above or below its nominal voltage and be of sufficient capacity and so arranged as to supply automatically in the event of failure of either the main or emergency source of electrical power at least the following services, if they depend upon an electrical source for their operation:

(i) For a period of 30 min, the load specified in 4.11.3 (f) (i)(1) through 4.11.3 (f) (i)(3) or in 4.11.3(f) (ii)(1) through 4.11.3(f) (ii)(3)

(ii) With respect to the watertight doors:

(1) Power to operate the watertight doors, but not necessarily simultaneously, unless an independent temporary source of stored energy is provided. The power source should have sufficient capacity

to operate each door at least three times (i.e., closed – open – closed) against an adverse list of 15°; and

(2) Power to the control, indication and alarm circuits for the watertight doors for half an hour.

The above requirements may be considered satisfied without the installation of a transitional source of emergency electrical power if each of the services required by that paragraph has independent supplies, for the period specified, from accumulator batteries suitably located for use in an emergency. The supply of emergency power to the instruments and controls of the propulsion and direction systems should be uninterruptible.

(i) The emergency switchboard is to be installed as near as is practicable to the emergency source of electrical power.

(j) Where the emergency source of electrical power is a generator, the emergency switchboard is to be located in the same space unless the operation of the emergency switchboard would thereby be impaired.

(k) No accumulator battery fitted in accordance with this Regulation is to be installed in the same space as the emergency switchboard. An indicator is to be mounted in a suitable place on the main switchboard or in the machinery control room to indicate when the batteries constituting either the emergency source of electrical power or the transitional source of emergency electrical power referred to in 4.11.3 (g) (i) (3) or 4.11.3 (h) above are being discharged.

(*l*) The emergency switchboard is to be supplied during normal operation from the main switchboard by an interconnector feeder which is to be adequately protected at the main switchboard against overload and short circuit and which is to be disconnected automatically at the emergency switchboard upon failure of the main source of electrical power. Where the system is arranged for feedback operation, the interconnector feeder is also to be protected at the emergency switchboard at least against short circuit.

(m) In order to ensure ready availability of the emergency source of electrical power, arrangements are to be made where necessary to disconnect automatically non-emergency circuits from the emergency switchboard to ensure that power is to be available to the emergency circuits.

(n) The emergency generator and its prime-mover and any emergency accumulator battery are to be so designed and arranged as to ensure that they are to function at full rated power when the craft is upright and when inclined at any angle of list up to 22.5° or when inclined up to 10° either in the fore or aft direction, or is in any combination of angles within those limits.

(o) Provision is to be made for the periodic testing of the complete emergency system and is to include the testing of automatic starting arrangements.

(p) In addition to the emergency lighting required by 4.11.3 (f) (i)(1) or 4.11.3 (f) (ii)(1), on every passenger craft with ro-ro cargo spaces:

(i) All passenger public spaces* and alleyways are to be provided with supplementary electric lighting that can operate for at least three hours when all other sources of electric power have failed and under any condition of heel. The illumination provided is to be such that the approach to the means of escape can be ready seen. The source of power for the supplementary lighting is to be consist of accumulator batteries located within the lighting units that are continuously charged, where practicable, from the emergency switchboard. Alternatively, any other means of lighting which are at least as effective may be accepted by the Society. The supplementary lighting is to be such that any failure of the lamp will be immediately apparent. Any accumulator battery provided is to be replaced at intervals having regard to the specified service life in the ambient conditions that they are subject to in service; and

(ii) a portable rechargeable battery operated lamp is to be provided in every crew space alleyway, recreational space and every working space which is normally occupied unless supplementary emergency lighting, as required by 4.11.3 (f) (i)(1) / 4.11.3 (f) (ii)(1), is provided.

* In category A craft having limited public spaces, emergency lighting fittings of the type described in 4.11.3(p)(i) as meeting the requirements of 4.11.3(f)(i)(1) and 4.11.3(h)(i) of this Chapter may be accepted, provided that an adequate standard of safety is attained.

(q) Distribution systems are to be so arranged that fire in any main vertical zone will not interfere with services essential for safety in any other such zone. This requirement will be met if main and emergency feeders passing through any such zone are separated both vertically and horizontally as widely as is practicable.

4.11.4 Emergency Source of Electrical Power in Cargo Craft

(a) For a cargo craft having a gross tonnage 500 and upward for unrestricted ocean service, there is to be a self-contained emergency source of electric power.

(b) The emergency sources of electrical power, associated transforming equipment, if any, transitional source of emergency power, emergency switchboard and emergency lighting switchboard are to be located above the uppermost continuous deck and are to be readily accessible from the open deck. They are not to be located forward of the collision bulkhead, except where permitted by the Society in exceptional circumstances.

(c) The locations of the emergency source of electrical power, associated transforming equipment, if any, the transitional source of emergency power, the emergency switchboard and the emergency lighting switchboard in relation to the main source of electrical power, associated transforming equipment, if any, and the main switchboard are to be such as to ensure to the satisfaction of the Society that a fire or other casualty in the space containing the main source of electrical power, associated transforming equipment, if any, and the main switchboard, or in any machinery space of category A will not interfere with the supply, control and distribution of emergency electrical power. As far as practicable the spaces containing the emergency source of electrical power, associated transforming equipment, if any, the transitional source of emergency electrical power and the emergency switch-board are not to be contiguous to the boundaries of machinery spaces of category A or those spaces containing the main source of electrical power, associated transforming equipment, if any, and the main switchboard. Where this is not practicable, the contiguous boundaries are to be Class A60.

(d) Provided that suitable measures are taken for safeguarding independent emergency operation under all circumstances, the emergency generator may be used, exceptionally, and for short periods, to supply non-emergency circuits.

(e) Alternative to Emergency Source of Power

Where the main source of electrical power is located in two or more compartments which are not contiguous, each of which has its own self-contained systems, including power distribution and control systems, completely independent of each other and such that a fire or other casualty in any one of the spaces will not affect the power distribution from the others, or to the services required by 4.11.4 (f), the requirements of 4.11.4 (a), 4.11.4 (b) and 4.11.4 (d) may be considered satisfied without an additional emergency source of electrical power, provided that:

(i) There is at least one generating set, meeting the requirements of 4.11.4 (n) and each of sufficient capacity to meet the requirements of 4.11.4 (f), in each of at least two non-contiguous spaces;

(ii) The arrangements required by 4.11.4(e)(i) above in each such space are equivalent to those required by 4.11.4 (g)(i), 4.11.4 (*i*), (j), (k), (l), (m), and 4.11.5 so that a source of electrical power is available at all times to the services required by 4.11.4, and

(iii) The generator sets referred to in 4.11.4(e)(i) and their self-contained systems are installed in accordance with 4.11.4 (b).

(f) The electrical power available is to be sufficient to supply all those services that are essential for safety in an emergency, due regard being paid to such services as may have to be operated simultaneously. The emergency source of electrical power is to be capable, having regard to starting currents and the transitory nature of certain loads, of supplying simultaneously at least the following services for the periods specified hereinafter, if they depend upon an electrical source for their operation:

(i) For a Period of 12 Hours, Emergency Lighting:

(1) At the stowage positions of life-saving appliances;

(2) At all escape routes such as alleyways, stairways, exits from accommodation and service spaces, embarkation points, etc.;

(3) In the public spaces, if any;

(4) In the machinery spaces and main emergency generating spaces, including their control positions;

(5) In control stations;

(6) At the stowage positions for fireman's outfits, and

(7) At the steering gear.

(ii) For a Period of 12 Hours:

(1) The navigation lights and other lights required by the International Regulation for Preventing Collisions at Sea in force;

(2) Electrical internal communication equipment for announcements during evacuation;

(3) Fire-detection and general alarm system and manual fire alarms, and

(4) Remote control devices of fire-extinguishing systems, if electrical.

(5) The navigational equipment as required by Chapter 13 of the IMO International Code of Safety for High-Speed Craft. Where such provision is unreasonable or impracticable, the Administration may waive this requirement for craft of less than 5,000 GT.

(iii) For a Period of 4 Hours of Intermittent Operation:

(1) The daylight signaling lamps, if they have no independent supply from their own accumulator battery, and

(2) The craft's whistle, if electrically driven.

(iv) For a Period of 12 Hours:

(1) Navigational equipment;

(2) Essential electrically powered instruments and controls for propulsion machinery, if alternate sources of power are not available for such device;

(3) One of fire pumps required by 6.2.3(b) of this Part if dependent upon the emergency generator for its source of power;

(4) The sprinkler pump and drencher pump, if fitted;

(5) The emergency bilge pump and all the equipment essential for the operation of electrically powered remote controlled bilge valves; and

(6) Craft radio facilities and other loads as set out in 14.13.2 of the IMO International Code of Safety for High-Speed Craft.

(v) For a Period of 10 Minutes:

Power drives for directional controls devices including those required to direct thrust forward and astern.

(vi) Craft on Short Duration Voyages

In a craft engaged regularly in voyages of short duration where an adequate standard of safety is attained, a lesser period than the 12 hour period specified in 4.11.4(f)(i), 4.11.4(f)(ii) ,and 4.11.4(f)(iv)(3) but not less than 5 hours may be accepted.

(g) The emergency source of electrical power may be either a generator or an accumulator battery, which is to comply with the following:

(i) Where the emergency source of electrical power is a generator, it is to be:

(1) driven by a suitable prime-mover with an independent supply of fuel, having a flashpoint (closed cup test) of not less than 43°C;

(2) started automatically upon failure of the main source of electrical power supply unless a transitional source of emergency electrical power in accordance with 4.11.4 (g) (i) (3) of this Part is provided; where the emergency generator is automatically started, it is to be automatically connected to the emergency switchboard; those services referred to in 4.11.4 (h) of this Part are then to be connected automatically to the emergency generator; and

(3) provided with a transitional source of emergency electrical power as specified in 4.11.4 (h) of this Part unless an emergency generator is provided capable both of supplying the services mentioned in 4.11.4 (h) of this Part and of being automatically started and supplying the required load as quickly as is safe and practicable subject to a maximum of 45 seconds.

(ii) Where the emergency source of electrical power is an accumulator battery it is to be capable of:

(1) carrying the emergency electrical load without recharging while maintaining the voltage of the battery throughout the discharge period within 12% above or below its nominal voltage;

(2) automatically connecting to the emergency switchboard in the event of failure of the main source of electrical power; and

(3) immediately supplying at least those services specified in 4.11.4 (h) of this Part.

(iii) Where electrical power is necessary to restore propulsion, the capacity is to be sufficient to restore propulsion to the craft in conjunction with other machinery, as appropriate, from a dead craft condition within 30 minutes after blackout.

(h) The transitional source of emergency electrical power where required by 4.11.4 (g) (i) (3) above is to consist of an accumulator battery suitably located for use in an emergency which is to operate without recharging while maintaining the voltage of the battery throughout the discharge period within 12% above or below its nominal voltage and be of sufficient capacity and is to be so arranged as to supply automatically in the event of failure of either the main or the emergency source of electrical power for half an hour at least the following services if they depend upon an electrical source for their operation:

(i) For a Period of 30 Minutes:

The loads specified in 4.11.4 (f) (i), 4.11.4 (f) (ii), and 4.11.4 (f) (iii) and

(ii) With Respect to the Watertight Doors:

(1) Power to operate the watertight doors, but not necessarily simultaneously, unless an independent temporary source of stored energy is provided. The power source should have sufficient capacity to operate each door at least three times (i.e., closed-open-closed) against an adverse list of 15°, and

(2) Power to the control, indication and alarm circuits for the watertight doors for half an hour.
For the transitional phase of loads as per 4.11.4 (h) (i) above, such loads may not be connected to the transitional source of power provided that:

a) The services are fitted with an independent supply for the period specified from an accumulator battery suitably located for use in an emergency.

b) The emergency lighting, in respect of the machinery space and accommodation and service spaces are provided by permanently fixed, individual, automatically charged, relay operated accumulator lamps.

(i) The emergency switchboard is to be installed as near as is practicable to the emergency source of electrical power.

(j) Where the emergency source of electrical power is a generator, the emergency switchboard is to be located in the same space unless the operation of the emergency switchboard would thereby be impaired.

(k) No accumulator battery fitted in accordance with this Regulation is to be installed in the same space as the emergency switchboard. An indicator is to be mounted in a suitable place on the main switchboard or in the machinery control room to indicate when the batteries constituting either the emergency source of electrical power or the transitional source of electrical power referred to 4.11.4 (g) (ii) or 4.11.4 (h) above are being discharged.

(l) The emergency switchboard is to be supplied during normal operation from the main switchboard by an interconnector feeder which is to be adequately protected at the main switchboard against overload and short circuit and which is to be disconnected automatically at the emergency switchboard upon failure of the main source of electrical power. Where the system is arranged for feedback operation, the interconnector feeder is also to be protected at the emergency switchboard at least against short circuit.

(m) In order to ensure ready availability of the emergency source of electrical power, arrangements are to be made where necessary to disconnect automatically non-emergency circuits from the emergency switchboard to ensure that electrical power is to be available automatically to the emergency circuits.

(n) The emergency generator and its prime-mover and any emergency accumulator battery are to be so designed and arranged as to ensure that they will function at full rated power when the craft is upright and when inclined at any angle of list up to 22.5° or when inclined up to 10° either in the fore or aft direction, or is in any combination of angles within those limits.

(o) Provision is to be made for the periodic testing of the complete emergency system and is to include the testing of automatic starting arrangements.

4.11.5 Starting Arrangements for Emergency Generating Sets

(a) Emergency generating sets are to be capable of being readily started in their cold condition at a temperature of 0°C. If this is impracticable, or if lower temperatures are likely to be encountered, provision acceptable to the Society is to be made for the maintenance of heating arrangements, to ensure ready starting of the generating sets.

(b) Each emergency generating set arranged to be automatically started is to be equipped with starting devices approved by the Society with a stored energy capability of at least three consecutive starts.The source of stored energy is to be protected to preclude critical depletion by the automatic starting system, unless a second independent means of starting is provided. In addition, a second source of energy is to be provided for an additional three starts within 30 minutes unless manual starting can be demonstrated to be effective.

(c) The stored energy is to be maintained at all times, as follows:

(i) electrical and hydraulic starting systems are to be maintained from the emergency switchboard;

(ii) compressed air starting systems may be maintained by the main or auxiliary compressed air receivers through a suitable non-return valve or by an emergency air compressor which, if electrically driven, is supplied from the emergency switchboard;

(iii) all of these starting, charging and energy storing devices are to be located in the emergency generator space; these devices are not to be used for any purpose other than the operation of the emergency generating set. This does not preclude the supply to the air receiver of the emergency generating set from the main or auxiliary compressed air system through the non-return valve fitted in the emergency generator space.

(d) Where automatic starting is not required, manual starting is permissible, such as manual cranking, inertia starters, manually charged hydraulic accumulators, or powder charge cartridges, where they can be demonstrated as being effective.

(e) When manual starting is not practicable, the requirements of 4.11.5 (b) and 4.11.5 (c) above are to be complied with except that starting may be manually initiated.

4.11.6 Use of Emergency Generator in Port

(a) To prevent the emergency generator or its prime mover from becoming overloaded when used in port, arrangements are to be provided to shed sufficient non-emergency loads to ensure its continued safe operations.

(b) The prime mover is to be arranged with fuel oil filters and lubrication oil filters, monitoring equipment and protection devices as requested for the prime mover for main power generation and for unattended operation.

(c) The fuel oil supply tank to the prime mover is to be provided with a low level alarm, arranged at a level ensuring sufficient fuel oil capacity for the emergency services for the period of time as required in 4.11.3 and 4.11.4.

(d) The prime mover is to be designed and built for continuous operation and is to be subjected to a planned maintenance scheme ensuring that it is always available and capable of fulfilling its role in the event of an emergency at sea.

(e) Fire detectors are to be installed in the location where the emergency generator set and emergency switchboard are installed.

(f) Means are to be provided to readily change over to emergency operation.

(g) Control, monitoring and supply circuits for the purpose of the use of the emergency generator in port are to be so arranged and protected that any electrical fault will not influence the operation of the main and emergency services. When necessary for safe operation, the emergency switchboard is to be fitted with switches to isolate the circuits.

(h) Instructions are to be provided on board to ensure that, even when the vessel is underway, all control devices (e.g. valves, switches) are in a correct position for the independent emergency operation of the emergency generator set and emergency switchboard.These instructions are also to contain information on the required fuel oil tank level, position of harbour/sea mode switch, if fitted, ventilation openings, etc.

4.11.7 Craft of Less than 500 GT having electrical plants of 75kW and above

(a) General

This requirement is intended for craft less than 500 GT having electrical plants of an aggregate capacity of 75 kW and above. The emergency source of electrical power is to be self-contained and readily available. 4.11.4 (b), 4.11.4 (c), 4.11.4 (g) through 4.11.4 (o) and 1.1 of Part V of CR high speed craft rules are also applicable. Where the source of electrical power is a battery, see 4.6 for the arrangement. For emergency lighting, a relay-controlled, battery-operated lantern is acceptable.

(b) Capacity

The emergency source of electrical power is to be capable of supplying simultaneously at least the following services for the period as specified herein:

(c) For a Period of 6 Hours, Emergency Lighting:

(i) At the stowage positions of life-saving appliances;

(ii) At all escape routes such as alleyways, stairways, exits from accommodation and service spaces, embarkation points, etc.;

(iii) In the public spaces, if any;

(iv) In the machinery spaces and main emergency generating spaces, including their control positions;

(v) In control stations;

(vi) At the stowage positions for fireman's outfits, and

(vii) At the steering gear.

(d) For a Period of 6 Hours:

(i) The navigation lights and other lights required by the International Regulation for Preventing Collisions at Sea in force;

(ii) Craft radio facilities and other loads as set out in 14.13.2 of the IMO International Code of Safety for High-Speed Craft.

(iii) Electrical internal communication equipment for announcements during evacuation.

4.12 Additional Requirements for Electric Propulsion Equipment

4.12.1 Electric Propulsion Equipment are to be in accordance with the requirements of Chapter 13 of Part VII of the Rules for Steel Ships.

4.13 High Voltage Installations with Voltages above 1 kV up to 15 kV

4.13.1 High Voltage Installations are to be in accordance with the requirements of Chapter 14 of Part VII of the Rules for Steel Ships.

4.14 Semiconductor Equipment

4.14.1 Semiconductor Equipment are to be in accordance with the requirements of Chapter 15 of Part VII of the Rules for Steel Ships.

4.15 Tests after Installation on Board

4.15.1 Tests after Installation on Board are to be in accordance with the requirements of Chapter 16 of Part VII of the Rules for Steel Ships.

4.16 Spare Parts

4.16.1 Spare Parts are to be in accordance with the requirements of Chapter 17 of Part VII of the Rules for Steel Ships.

4.17 Uninterruptible Power System

4.17.1 Uninterruptible power systems are to be in accordance with the requirements of Chapter 18 of Part VII of the Rules for Steel Ships.

4.18 Electrical Plants of less than 75 kW

4.18.1 General

Electrical plants having an aggregate capacity of less than 75 kW are to comply with the following requirements and the requirements in Chapter 4 of this Part as applicable – except 4.1.3, 4.2.2 (c), 4.2.2 (a), 4.11.2, 4.11.3, 4.11.4 ～ 4.11.7, 4.7.1.3, 4.2.3 (j), 4.2.3 (m), 4.2.4, 4.2.5 (a) ～ 4.2.5 (l), 4.2.1 (n), 4.5.1.2, 4.5.2.6, 4.8 and 4.14.

4.18.2 Standard Details

Standard wiring practices and details, including such items as cable supports, earthing details, bulkhead and deck penetrations, cable joints and sealing, cable splicing, watertight and explosion-proof connections to equipment, earthing and bonding connections, etc., as applicable, are to be indicated on the submitted plans or may be submitted in a booklet format.

4.18.3 Calculations of Short-circuit Currents

In the absence of precise data, the following short circuit currents at the machine terminals are to be assumed:

(a) Direct Current System

Ten times the full load current for generators normally connected (including spare) for each generator capable of being simultaneously connected. Six times full load current for motors simultaneously in service.

(b) Alternating Current System

Ten times the full load current for generators normally connected (including spare) for each generator capable of being simultaneously connected-symmetrical rms. Three times full load current of motors simultaneously in service.

4.18.4 Lightning Protection

For lightning protection systems, see 4.2.6 (g) of this Chapter.

4.18.5 Temperature Ratings

In the requirements contained in 4.18 of this Chapter, an ambient temperature of 40°C has been assumed for all locations. Where the ambient temperature is in excess of this value, the total temperature specified is not to be exceeded. Where equipment has been rated on ambient temperature less than that contemplated, consideration will be given to the use of such equipment, provided the total temperature for which the equipment is rated will not be exceeded.

4.18.6 Generators

Craft using electricity for propulsion auxiliaries or preservation of cargo are to be provided with at least two generators. These generators are not to be driven by the same engine. The capacity of the generating sets is to be sufficient to carry the necessary load essential for the propulsion and safety of the craft and preservation of the cargo (if applicable) with any one generator set in reserve. Craft having only one generator are to be provided with a battery source to supply sufficient lighting for safety.

4.18.7 Emergency Source of Power

(a) Capacity

The emergency source of electrical power is to have adequate capacity to provide emergency lighting for a period of at least six hours.

(b) Sources

The emergency power source may be any of the following:

(i) An automatically connected or manually controlled storage battery; or

(ii) An automatically or manually started generator; or

(iii) Relay-controlled, battery-operated lanterns.

(c) Battery Sources

Where the source of electrical power is a battery connected to a charging device with an output of more than 2 kW, the battery is to be located as near as practicable

4.18.8 Cable Construction

Cables are to have copper conductors constructed in accordance with a recognized standard and are to be of the stranded type, except sizes not exceeding 1.5 mm^2 (16 AWG) may have solid conductors.

4.18.9 Switchboards, Distribution Boards and Panels

(a) Installation

Switchboards, distribution boxes panels and panels are to be installed in dry accessible, and well ventilated areas. Not less than 610 mm clearance is to be provided in front of switchboards, distribution boxes panels and panels. When located at the helm or other area adjacent to or part of an open cockpit or weather deck, they are to be protected by a watertight enclosure.

(b) Instrumentation

A voltmeter, ammeter, frequency meter, and voltage regulator are to be provided for each generator installed. Control equipment and measuring instruments are to be provided as necessary to insure satisfactory operation of the generator or generators.

4.18.10 Navigation Running Lights

Mast head, port, starboard, and stem lights when required are to be controlled by a running light indicator panel. A fused-feeder disconnect switch is to be provided; the rating of the fuses is to be at least twice thatof the largest branch fuse and greater than the maximum panel load.

4.19 Specialized Craft and Services

4.19.1 Installations in Special-Category Spaces

(a) Application

In addition to the foregoing requirements in this Section, the following requirements are applicable for installations in special-category spaces. Special category spaces are those enclosed spaces intended for the carriage of motor vehicles with fuel in their tanks for their own propulsion, into and from which such vehicles can be driven, and to which passengers have access, including spaces intended for the carriage of cargo vehicles.

(b) Ventilation System

(i) Arrangement

The ventilating system for special-category spaces is to be independent from other ventilation systems and is to be capable of being controlled from a position outside the space.

(ii) Capacity

An effective power ventilation system of sufficient capacity to give at least 10 air changes per hour while navigating and 20 air changes per hour at the quayside during vehicle loading and

unload operations is to be provided.

(iii) Fans

Exhaust fans are to be of non-sparking construction.

(iv) Material and Arrangement of Ducts

Ventilation ducts, including dampers, are to be of steel. Ducts serving spaces capable of being sealed are to be separated for such space.

(v) Exhaust Inlet and Outlet

Inlet for exhaust ducts are to be located within 450 mm above the vehicle deck. The

outlet is to be sited in a safe position, having regard to the source of ignition near the outlet.

(vi) Emergency Shutdown

Arrangements are to be provided to permit a rapid shutdown and effective closure of the ventilation system in case of fire, taking into account the weather and sea conditions. See also 4.19.1 (b) (i).

(vii) Operating Compartment Indication

Means are to be provided on the operating compartment or other appropriate locations to indicate any loss of the ventilating capacity.

(c) Location and Type of Equipment

(i) Certified Safe Type Equipment

Except as provided for in 4.19.1 (c) (ii) below, electrical equipment and wiring within the enclosed vehicle spaces referred to in 4.19.1 (b) (i). are to be increased-safety, explosion-proof or intrinsically-safe type.

(ii) Arrangements

Except for a distance within 450 mm above the platform that does not have openings of sufficient size permitting penetrations of petroleum gases downward, electrical equipment of a type so enclosed and protected as to prevent the escape of sparks, e.g., protection degree of IP55 of equivalent.

(iii) Equipment in Ducts from Vehicle Space

Electrical equipment and wiring installed within an exhaust duct are to be increased-safety,

explosion-proof or intrinsically-safe type.

4.20 Craft less than 24 meters in Length

4.20.1 General

Electrical systems are to comply with a recognized standard acceptable to the Society. Examples of acceptable standards are given below:

(a) ISO 10133Small Craft – Electrical Systems – Extra-low-voltage DC installations

(b) ISO 13297Small Craft – Electrical Systems – Alternating current installations

(c) ABYC, Section E-11 (AC and DC)AC and DC Electrical Systems on Boats

4.20.2 Interior Communication Systems and Manually Operated Alarms

Interior communication and Alarms systems complying with 4.2.5 are required except as modified below:

(a) Craft which do not have below deck spaces are not required to have interior communication systems.

(b) Craft which have below deck spaces which are not normally occupied while in operations are not required to have interior communication systems.

(c) Alternatives to the requirements of 4.2.5 will be considered provided they are shown to be no less effective than the requirements of that Section.

4.20.3 Battery Starting Systems

Craft are to comply with 3.6.2 of Part IV of the Rules for Steel Ships. Alternatively where the propulsion engines can be started manually, only one battery (battery bank) will be required.

Chapter 5

Automatic or Remote Control and Monitoring systems

5.1 General Requirements

Automatic or remote control and monitoring systems are to be in accordnace with the requirements of Part VIII of the Rules for the construction and classification of steel ships.

Chapter 6

Fire Detection and Extinction

6.1 All Craft

6.1.1 General

(a) Classification requirements

The following are the minimum classification requirements for high-speed cargo craft which do not proceed, in the course of their voyage, more than 8 hours, at operational speed, from a place of refuge.

Cargo craft which proceed more than 8 hours from a place of refuge are to comply with the applicable requirements of the Rules for Steel Ships.

Application of the requirements for fire detection and extinction is to be in accordance with Fig. IV 6-1 below.

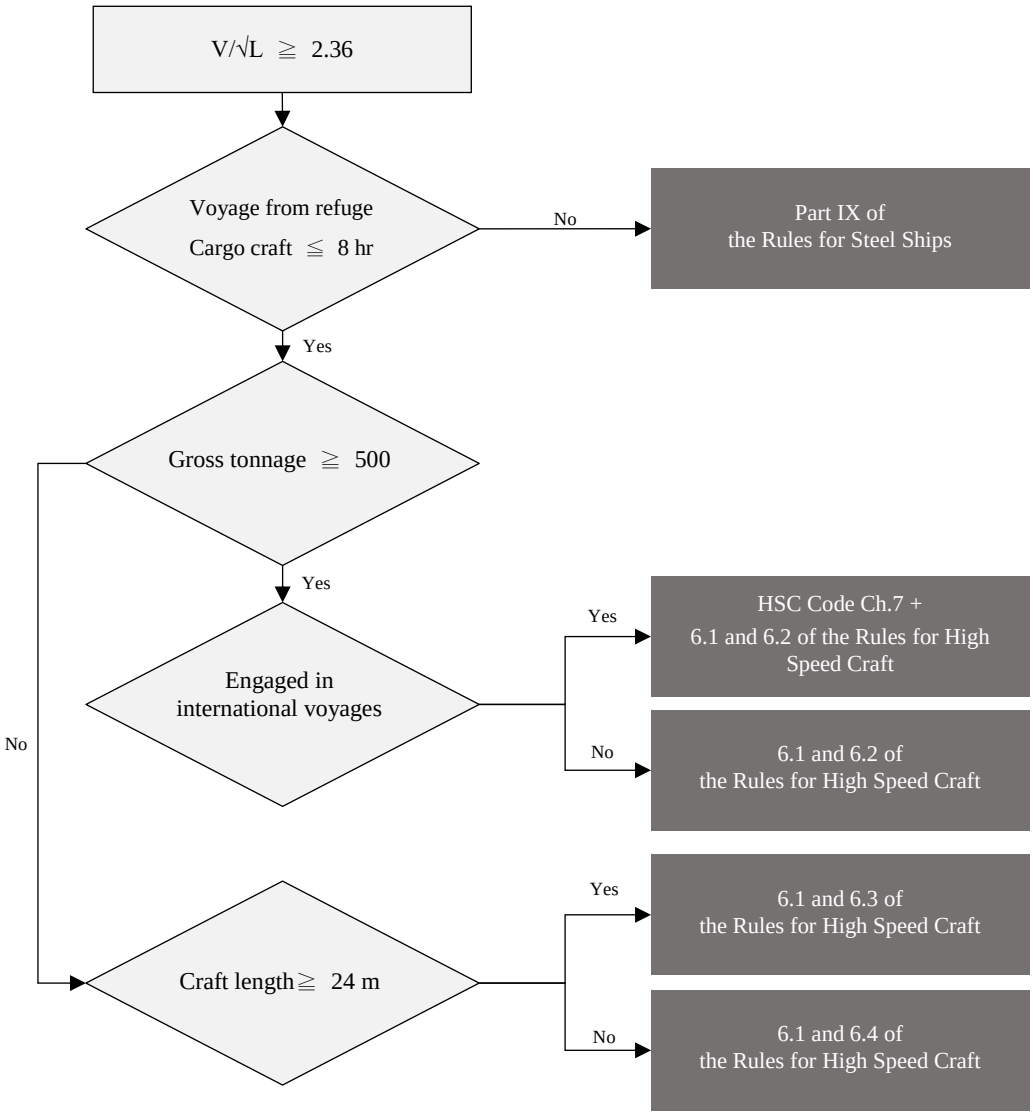

Fig. IV 6-1
Application of the Requirements for Different Types of Craft

(b) Governmental authority

Attention is directed to the appropriate governmental authority. In each case, there may be additional requirements depending on the gross tonnage, length, type and intended service of the craft, as well as other particulars and details. Consideration will be given to fire extinguishing systems which comply with the published requirements of the governmental authority of the country in which the craft is to be registered.

(c) Automated propulsion machinery spaces

Where automatic controls for propulsion machinery spaces are installed and it is intended that the propulsion machinery spaces are either not continuously manned at sea or only one person is required on watch, the requirements of Chapter 5 of this Part are to be met.

(d) Plans and specifications

The plans together with supporting data and particulars listed as follows are to be submitted for review. The Society reserves its right to ask for supplementary copies, if deemed necessary in particular cases.

(i) Arrangement and details of control station for emergency closing of openings and stopping machinery

(ii) Details and location of firefighter's outfits

(iii) Details of fire extinguishing appliances

(iv) Fire control plans (see 6.1.1(e) below)

(v) Plans of the following systems:

(1) Fire main system

(2) Foam extinguishing system

(3) Fire detection systems

(4) Fixed gas extinguishing system

(5) Fixed water spraying system

(vi) Other fire extinguishing arrangements

For craft of 500 gross tonnage and over, the most severe service condition for the operation of the emergency fire pump (e.g., lightest draft as shown in Trim and Stability Booklet, etc.)

For craft of 500 gross tonnage and over, calculations and pump data demonstrating that the emergency fire pump system can meet the operational requirements specified in 6.2.3(b)(iii) and 6.2.3(b)(vi) of this Chapter with the proposed pump location and piping arrangements (e.g., adequate suction lift, discharge pressure, capacity, etc.) at the most severe service condition

(e) Fire control plans

(i) Required information

Fire control plans are to be general arrangement plans showing for each deck the provision, location, controls and particulars, as applicable, of fixed fire detection, alarm and extinguishing systems, portable fire fighting appliances and equipment, controls for shutdowns of the ventilation system, fuel oil pumps and valves, along with details of the means provided for the closing of openings, and locations of accesses to critical spaces (such as fire control stations, Category A machinery spaces, etc.). For craft where structural fire protection is required by the Rules, locations and type of fire retarding bulkheads are to be specified on the plan.

(ii) Plan location

The fire control plans are to be conspicuously posted in the craft for the guidance of the crew.

(f) Additional fixed fire fighting systems

Where a fixed fire extinguishing system not required by Sections 6.2, 6.3 or 6.4 is installed, such system is to meet the applicable requirements of 6.2.6 of this Chapter and is to be submitted for approval.

6.1.2 Fire pumps, fire main, hydrants and hoses

(a) Materials

Materials readily rendered ineffective by heat are not to be used for fire mains unless adequately protected. In order to be considered not "readily rendered ineffective by heat", a component is to be certified as having passed an applicable, recognized fire test, or the material is to have a melting temperature higher than the test temperature specified in an applicable fire test.

For cargo craft less than 500 gross tonnage constructed of aluminum and FRP, pipes, valves and fittings which are required to be "not readily rendered ineffective by heat" may be accepted provided the solidus melting point of the material is greater than or equal to that of the material forming the bottom shell plating

(b) Fire pumps

(i) Number of pumps

All craft are to have at least two fire pumps. Refer to 6.2.3 of this Chapter for craft of 500 gross tonnage or over, or 6.3.1(a) of this Chapter for craft under 500 gross tonnage. Refer to 6.4.2 of this Chapter for craft under 24 m in length.

(ii) Type of pumps

Sanitary, ballast, bilge or general service pumps may be accepted as fire pumps, provided that they are not normally used for pumping oil. If the pumps are subject to occasional duty for the transfer or pumping of fuel oil, changeover arrangements that prevent operation for firefighting when configured for fuel transfer are to be fitted.

(iii) Pressure

Power-driven fire pumps are to have sufficient pressure to produce 12 m jet throw through any two adjacent hydrants located in accordance with 6.1.2(d)(i) below. Also refer to 6.2.3(a) or 6.3.1(a) of this Chapter.

(iv) Relief valves

In conjunction with all fire pumps, relief valves are to be provided if the pumps are capable of developing a pressure exceeding the design pressure of the water service pipes, hydrants and hoses. These valves are to be so placed and adjusted as to prevent excessive pressure in any part of the fire main system. In general, the relief valve is to be set to relieve at no greater than 1.7 bar in excess of the pump pressure necessary to maintain the requirements of 6.1.2(b)(iii) above.

(c) Fire main

(i) Size

Refer to 6.2.2 of this Chapter for craft of 500 gross tonnage and over. For craft under 500 gross tonnage, the diameter of the fire main and water service pipes is to be sufficient for the effective distribution of the maximum required discharge from the pump(s). Refer to 6.3.1, 6.4.2(b) and Table IV 6-5 of this Chapter.

(ii) Cocks or valve

A valve is to be fitted to serve each fire hose so that any fire hose may be removed while the fire pumps are at work.

(iii) Cold weather protection

Fire main systems are to be provided with drains, circulation loops or other means for cold weather protection.

(d) Hydrants

(i) Number and position of hydrants

The number and position of the hydrants are to be such that at least two jets of water not emanating from the same hydrant, one of which is to be from a single length of hose, may reach any part of the craft normally accessible to the passengers or crew while the craft is being navigated. In addition, the arrangements are to be such that at least two jets of water can reach any part of any cargo space when empty.

(ii) Materials

Materials readily rendered ineffective by heat are not be used for fire protection systems unless adequately protected. See 6.1.2(a) above.

(iii) Installation

The pipes and hydrants are to be so placed that the fire hoses may be easily coupled to them. In craft where deck cargo may be carried, the positions of the hydrants are to be such that they are always readily accessible and the pipes are to be arranged to avoid risk of damage by such cargo.

(e) Hoses

(i) General

Fire hoses are to be of a type certified by a competent independent testing laboratory as being constructed of nonperishable material to a recognized standard. The hoses are to be sufficient in length to project a jet of water to any of the spaces in which they may be required to be used.

Fire hoses are to have a length of at least 10 m, but not more than:

- 15 m in machinery spaces;
- 20 m in other spaces and open decks; and
- 25 m for open deck on craft with a maximum breath in excess of 30 m

Each hose is to have a nozzle and the necessary couplings. Fire hoses, together with any necessary fittings and tools, are to be kept ready for use in conspicuous positions near the hydrants.

(ii) Diameter

For craft less than 500 gross tonnage, hoses are not to have a diameter greater than 38 mm. Hoses for craft under 20 m in length may be of a good commercial grade having a diameter of not less than 16 mm, and are to be have a minimum test pressure of 10.3 bar and a minimum burst pressure of 31.0 bar.

(iii) Number of fire hoses

In craft of 1,000 gross tonnage and upwards, the number of fire hoses to be provided is to be at least one for each 30 m length of the craft and one spare, but in no case less than five in all. This number does not include any hoses required in any engine or boiler room. In craft of less than 1,000 gross tonnage, the number of fire hoses to be provided is to be at least one for each 30 m length of the craft and one spare. However, the number of hoses is to be in no case less than three.

Unless one hose and nozzle is provided for each hydrant in the craft, there are to be complete interchangeability of hose couplings and nozzles.

(f) Nozzles

(i) Size

Standard nozzle sizes are to be 12 mm, 16 mm and 19 mm, or as near thereto as possible. Larger diameter nozzles may be permitted subject to compliance with 6.1.2(b)(iii) above. For accommodation and service spaces, a nozzle size greater than 12 mm need not be used. For machinery spaces and exterior locations, the nozzle size is to be such as to obtain the maximum discharge possible from two jets at the pressure mentioned in 6.1.2(b)(iii) above from the smallest pump; however, a nozzle size greater than 19 mm need not be used.

(ii) Type

All nozzles are to be of an approved dual-purpose type (i.e., spray and jet type) incorporating a shut-off. Fire hose nozzles of plastic type material such as polycarbonate may be accepted subject to review of their capacity and serviceability as marine use fire hose nozzles.

6.1.3 Means for closing of openings, stopping of machinery and oil containment

(a) Ventilation fans and openings

Means are to be provided for stopping ventilation fans serving machinery and cargo spaces, and for closing all doorways, ventilators and other openings to such spaces. These means are to be capable of being operated from outside such spaces in case of fire. See 2.1.13(a) of Part VII of the Rules for Steel Ships.

(b) Other auxiliaries

Machinery driving forced- and induced-draft fans, oil-fuel transfer pumps, oil-fuel unit pumps and other similar fuel pumps, fired equipment such as an incinerator, lubricating oil service pumps, thermal oil circulating pumps and oil separators (purifiers) are to be fitted with remote shutdowns situated outside of the spaces concerned so that they may be stopped in the event of a fire arising in the space. This need not apply to oily water separators. See 2.1.13(b) of Part VII of the Rules for Steel Ships.

In addition to the remote shutdowns required above, a means to shut down the equipment is to be provided within the space itself.

(c) Oil tank suction pipes

Except for small independent tanks having a capacity of less than 500 liters, every oil-suction pipe from a storage, settling, daily service tank or lube oil tank situated above the double bottom is to be fitted with a valve capable of being closed in the event of a fire from outside of the space where such tanks are located. In the special case of deep tanks situated in any shaft or pipe tunnel, control may be effected by means of an additional valve on the pipe line outside of the tunnel. See 3.3 of this Part.

Where inadvertent valve closure could result in damage to the running machinery due to lack of lubricating oil, a valve is to be fitted on the lubricating oil tank, but remote control of the valve from outside of the space is not required.

6.1.4 Helicopter facilities

(a) Application

For each helicopter deck on board a craft designated for helicopter operations, fire fighting system and equipment complying with 6.1.4(b)(ii) and 6.1.4(b)(iii) below as applicable, are to be provided. Helicopter deck (helideck) is a purpose-built helicopter landing area, on a craft including all structure, fire fighting appliances and other equipment necessary for the safe operation of helicopters, but not those areas for occasional or emergency helicopter operations (e.g., circle H marked on hatch covers for drop-off/ pickup of pilot). Helicopter facility is a helideck including any refueling and hangar facility.

(b) Provisions for helicopter deck

(i) Hoses and nozzles

At least two combination solid stream and water spray nozzles and hoses sufficient in length to reach any part of the helicopter deck are to be provided.

(ii) Portable extinguishers

The helicopter deck is to be protected by at least two dry powder extinguishers of a total capacity of not less than 45 kg.

(iii) Back-up system

A back-up fire fighting system is to be provided consisting of CO_2 extinguishers of a total capacity of not less than 18 kg or equivalent, one of these extinguishers being equipped so as to enable it to reach the engine area of any helicopter using the helicopter deck. The back-up system is to be located so that the equipment would not be vulnerable to the same damage as the dry powder extinguisher required by 6.1.4(b)(ii) above.

(iv) Fixed foam system

A suitable fixed foam fire extinguishing system, consisting of monitors or hose streams or both, is to be installed to protect the helicopter landing area in all weather conditions in which helicopters can operate. The system is to be capable of delivering foam solution at a discharge rate in accordance with Table II 12A-4 in the Rules for Steel Ships for at least 5 minutes. The operation of the foam system is not to interfere with the simultaneous operation of the fire main.

The foam agent is to meet the performance standards for Level B foam in the International Civil Aviation Organization's Airport Services Manual (Part 1 Chapter 8, Paragraph 8.1.5, Table 8-1) or other recognized standard and be suitable for use with sea water.

(v) Fireman's outfits

In addition to the fireman's outfits required in 6.2.8 of this Chapter, 2 additional sets of fireman's outfits are to be provided and stored near the helicopter deck.

(vi) Other equipment

The following equipment is to be provided near the helicopter deck and is to be stored in a manner that provides for immediate use and protection from the elements:

- Adjustable wrench
- Fire resistant blanket
- Bolt cutters with arm length of 60 cm or more
- Grab hook or salving hook
- Heavy duty hack saw, complete with six spare blades
- Ladder
- Lifeline of 5 mm diameter × 15 m length
- Side cutting pliers
- Set of assorted screw drivers
- Harness knife complete with sheath

(c) Provisions for enclosed helicopter facilities

Hangars, refueling and maintenance facilities are to be treated as machinery space of category A with regard to structural fire protection, fixed fire-extinguishing system and fire detection system requirements. See 6.2.6 of this Chapter and 6.1.6 below.

(d) Operation manual

Each helicopter facility is to have an operation manual, including a description and a checklist of safety precautions, procedures and equipment requirements. This manual may be part of the craft's emergency response procedures.

6.1.5 Portable extinguishers

Portable extinguishers are to be provided in the quantities and locations indicated in Table IV 6-1 and Table IV 6-2 below.

Table IV 6-1
Classification of Portable and Semi-Portable Extinguishers

Extinguisher Type(1)		Water (*l*)	Foam (*l*)	Carbon dioxide (kg)	Dry chemical (kg)	Wet chemical (*l*)
A-II	Hand Portable	9	9	-	5	9
B-II	Hand Portable	-	9	5	5	-
B-III	Semi-Portable	-	45	15.8	9	-
B-IV	Semi-Portable	-	76	22.5	22.5	-
B-V	Semi-Portable	-	152	45(2)	22.5(2)	-
C-II	Hand Portable	-	-	5	5	-
C-III	Semi-Portable	-	-	15.8	9	-
C-IV	Semi-Portable	-	-	22.5	13.5	-
F-II or K-II	Hand Portable	-	-	-	-	9

Notes:

(1) Fire extinguishers are designated by type as follows:
- A: for fires in combustible materials such as wood;

- B: for fires in flammable liquids and greases;
- C: for fires in electrical equipment.

(2) For outside use, the amount is to be double.

Table IV 6-2
Portable and Semi-Portable Extinguishers

Space	Extinguisher type	Arrangement(5)
Control Stations		
Wheelhouse	C-II	2 in vicinity of exit(4)
Radio room	C-II	1 in vicinity of exit(4)
Accommodations		
Sleeping accommodations	A-II	1 in each sleeping accommodation space Where occupied by more than four persons.)
Corridors	A-II	1 in each main corridor not more than 46 m apart (May be located in stairways.)
Service Spaces		
Galleys	B-II or C-II	1 for each 230 m^2 or fraction thereof for hazards involved.
Storerooms	A-II	1 for each 230 m^2 or fraction thereof located in vicinity of exits, either inside or outside of spaces(4)
Workshops	A-II	1 outside the space in vicinity of exit(4)
Machinery Spaces		
Diesel engines or gas turbine	B-II and B-III	1 for each 746 kW, but not less than 2 nor more than 6(1) 1 required(3)
Electric motors or generators of the open type	C-II	1 for each motor or generator unit(2)

Notes:

(1) When installation is on weather deck or open to atmosphere at all times, 1 type B-II extinguisher for every three engines is allowable.

(2) Small electrical appliances, such as fans, etc., are not to be counted or used as basis for determining number of extinguishers required.

(3) Not required on craft of less than 500 gross tonnage.

(4) Vicinity is intended to mean within 1 m.

(5) For craft of 1,000 gross tonnage and above, at least five extinguishers are to be provided for accommodation spaces, service spaces, spaces where the craft's radio, main navigation equipment or emergency source of power is located, and locations where the fire recording or fire control equipment is located.

6.1.6 Fixed fire detection and alarm systems

(a) General

Where required, fixed fire detection and alarm systems are to comply with Regulations 7.7.1 and 7.7.2 of the International Code of Safety for High-Speed Craft and Chapter 9 of the International Code for Fire Safety Systems.

(b) Machinery space

A Fixed Fire Detection and Alarm System complying with 6.1.6(a) above are to be provided for any machinery space containing an diesel engine, gas turbine, oil filling station, or switchboards of aggregate capacity exceeding 750 kW.

(c) Accommodation and service spaces

A fixed fire detection and alarm system complying with 6.1.6(a) above is to be provided for all accommodation and service spaces.

6.1.7 Paint and flammable liquid lockers

Paint and flammable liquid lockers or any similar service spaces used for the storage of flammable liquids (such as solvents, adhesives, lubricants etc.) are to be protected by a fire extinguishing arrangement enabling the crew to extinguish a fire without entering the space. Unless required or permitted otherwise by the flag Administration, one of the following systems is to be provided:

(a) Lockers of 4 m^2 or more floor area and lockers with access to accommodation spaces

Paint lockers and flammable liquid lockers of floor area 4 m^2 or more and also such lockers of any floor area with access to accommodation spaces are to be provided with one of the fixed fire extinguishing systems specified below:

(i) CO_2 system, designed for 40 % of the gross volume of the space.

(ii) Dry powder system, designed for at least 0.5 kg/m^3.

(iii) Water spraying system, designed for 5 liters/m^2/minute. The water spraying system may be connected to the craft's fire main system, in which case, the fire pump capacity is to be sufficient for simultaneous operation of the fire main system, as required in 6.2.3(a) of this Chapter, and the water spray system. Precautions are to be taken to prevent the nozzles from being clogged by impurities in the water or corrosion of piping, nozzles, valves and pump.

(iv) Systems or arrangements other than those referenced above may be also considered, provided they are not less effective.

(b) Lockers of less than 4 m^2 floor area having no access to accommodation spaces

For paint lockers and flammable liquid lockers of floor area less than 4 m^2 having no access to accommodation spaces, portable fire extinguisher(s) sized in accordance with 6.1.7(a)(i) and which can be discharged through a port in the boundary of the lockers may be accepted. The required portable fire extinguishers are to be stowed adjacent to the port. Alternatively, a port or hose connection may be provided for this purpose to facilitate the use of water from the fire main.

The required portable fire extinguisher are to be stowed adjacent to the port. Alternatively, a port or hose connection may be provided to facilitate the use of fire main water.

6.1.8 Spaces containing dangerous goods

Craft intending to carry dangerous goods are to comply with the applicable requirements of Chapter 7 Part D of the International Code of Safety for High-Speed Craft.

6.2 Craft of 500 Gross Tonnage and Over

6.2.1 Fire safety measures

The applicable requirements of 4.1 of Part III of the Rules are to be complied with.

6.2.2 Size of fire main

The diameter of the fire main and water service pipes is to be sufficient for the effective distribution of the maximum required discharge from two fire pumps operating simultaneously, except that the diameter need only be sufficient for the discharge of 140 m^3/hr.

6.2.3 Main and emergency fire pumps

(a) Main fire pumps

(i) Number of pumps

For craft of 1,000 gross tonnage and above, the pumps are to be independently power-driven. For craft less than 1,000 gross tonnage, only one of the pumps need be independently power-driven and one of the pumps may be attached to the propulsion unit.

(ii) Total pump capacity

The fire pumps required by 6.2.3(a)(i) above are to be capable of delivering for firefighting purposes a quantity of water, at the appropriate pressure prescribed, not less than four-thirds of the quantity required under 3.2.2(b) of this Part to be dealt with by each of the independent bilge pumps when employed on bilge pumping, using in all cases L = length of craft, as defined in 1.1.2 of Part III of the Rules, except that the total required capacity of the fire pumps need not exceed 180 m^3/hr.

(iii) Individual pump capacity

Each of the fire pumps required by 6.2.3(a)(i) above is to have a capacity of not less than 40% of the total required capacity, but not less than 25 m^3/hr, and in any event is to be capable of delivering at least the two required jets of water. These pumps are to be capable of supplying the water under the required conditions. Where more pumps than required are installed, their capacity will be subject to special consideration.

(iv) Pressure

For craft 1,000 gross tonnage and over with the two power-driven pumps simultaneously delivering through the nozzles specified in 6.1.2(f) the quantity of water specified in 6.1.2(c)(i) through any adjacent hydrants, a pressure of 2.5 bar is to be maintained at all hydrants.

For craft less than 1,000 gross tonnage, the power-driven fire pumps are to have sufficient pressure to produce 12 m jet throw through any two adjacent hydrants located in accordance with 6.1.2(c)(i).

(v) Arrangement

Unless an emergency fire pump complying with 6.2.3(b) below is provided, the two main fire pumps, including their power source, fuel supply, electric cables, and lighting and ventilation for the spaces in which they are located, are to be in separate compartments so that a fire in any one compartment will not render both main pumps inoperable. Only one common boundary is allowed between the compartments, in which case, the single common boundary is to be at least to A-0 standard.

No direct access is allowed between the compartments except that where this is impracticable, an access meeting the requirements in 6.2.3(a)(vi) below may be considered.

(vi) Alternative arrangement

Where it is impracticable to do otherwise, a direct access between the compartments containing the main fire pumps may be considered, provided:

(1) A watertight door capable of being operated locally from both sides of the bulkhead, and from a safe and accessible location outside of these spaces is provided. The means for the latter operation is expected to be available in the event of fire in these spaces; or

(2) An air lock consisting of two gastight steel doors. The doors are to be self-closing without any hold back arrangements.

(3) In addition to the arrangements specified in 6.2.3(a)(vi)(1) or 6.2.3(a)(vi)(2) above, a second protected means of access is to be provided to the space containing the fire pumps.

(vii) Isolation

Isolating valves and other arrangements, as necessary, are to be provided so that if a fire pump and its associated piping within its compartment are rendered inoperable, the fire main can be pressurized with a fire pump located in another compartment.

(b) Emergency fire pumps

(i) When Required

If a fire in any one compartment could put all main pumps out of action (see 6.2.3(a)(ii)), an independently power-driven and self-priming emergency fire pump complying with this paragraph is to be provided.

(ii) Arrangement

An emergency fire pump system, including power source, fuel supply, electric cables, and lighting, as well as lighting and ventilation for the emergency fire pump space, is to be in a separate compartment than the main fire pumps so that a fire in any one compartment will not render both the main and the emergency firepumps inoperable.

No direct access is permitted between the main machinery space and the spaces containing the emergency fire pump and its source of power. Where this is impracticable, access between the space containing the emergency fire pump and the main machinery space, in accordance with 6.2.3(a)(vi), may be considered

The space containing the emergency fire pump is not to be contiguous to the boundaries of machinery spaces of Category A or the spaces containing the main fire pumps. Where this is impracticable, the common bulkhead between the two spaces is to be constructed to A-60 standard. The insulation is to extend at least 450 mm outside of the area of the joint bulkheads and decks.

(iii) Capacity

The emergency fire pump is to be capable of supplying at least two jets of water required by 6.1.2(c)(i), using the available hydrants, hoses and nozzles, and is to have a capacity of at least 40% of the total capacity of the fire pumps required by 6.2.3(a)(ii) or 25 m^3/hr, whichever is greater.

When the pump is delivering the quantity of water, as above, the pressure at the hydrant is to be not less than the pressure given in 6.2.3(a)(iv).

In addition, the emergency fire pump is also to be capable of simultaneously supplying the amount of water needed for any fixed extinguishing system protecting the space containing the main pumps.

(iv) Starting

Diesel engines larger than 15 kW are to be provided with power starting systems having a capacity sufficient for at least six starts within 30 minutes, including at least two within the first ten minutes. For engines of 15 kW and smaller, manual means of starting is sufficient.

Any diesel engine driving an emergency fire pump is to be capable of readily being started in its cold condition down to a temperature of 0°C. If this is impracticable or if lower temperatures are likely to be encountered, consideration is to be given to the provision and maintenance of heating arrangements.

(v) Fuel Supply

Any service fuel tank is to contain sufficient fuel to enable the pump to run on full load for at least three hours and sufficient reserves of fuel are to be available outside of the main machinery space to enable the pump to be run on full load for an additional 15 hours.

(vi) Suction

The total suction head and the net positive suction head of the pump is to be such that the requirements of 6.2.3(b) of this Chapter.3 and 6.2.3(a)(iv) will be satisfied under all conditions of list, trim, roll and pitch likely to be encountered in service. The sea valve is to be operable from a position near the pump or locked in the open position (provided possible flooding can be detected).

6.2.4 International shore connection

At least one international shore connection, as shown in Fig. IV 6-2 below, is to be provided and kept aboard the craft with gasket, bolts and eight washers. Facilities are to be available enabling such a connection to be used on either side of the craft.

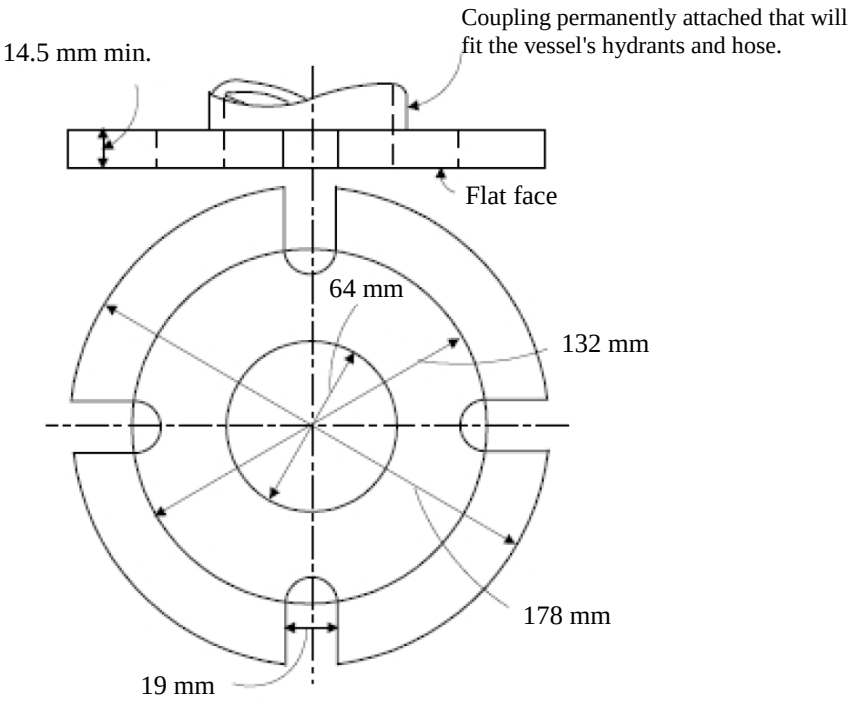

Bolt: 4, each of 16 mm dia., 50 mm in length
Flange surface: Flat face
Material: Any suited for 10 bar service
Gasket: Any suited for 10 bar service

Fig. IV 6-2
International Shore Connection

6.2.5 Machinery spaces

Category A machinery spaces are to be protected by a fixed fire extinguishing system complying with 6.2.6 below.

(a) Fixed local application firefighting systems

For cargo craft of 2,000 gross tonnage and above, the machinery spaces of category A above 500 m^3 in volume, in addition to the fixed fire extinguishing system required in 6.2.6 below, are to be protected by an approved type of fixed water-based or equivalent local application firefighting system complying with the provisions of the IMO Guidelines for the Approval of Fixed Water-based Local Application Firefighting System for Use in Category A Machinery Spaces, MSC/Circ. 1387. In the case of periodically unattended machinery spaces, the fire fighting system is to have both automatic and manual release capabilities. In case of continuously manned machinery spaces, the fire fighting system is only required to have a manual release capability. The fixed local fire fighting systems are to protect areas such as the following without the necessity of engine shutdown, personnel evacuation or sealing the spaces:

(i) The fire hazard portion of internal combustion machinery;

(ii) The fire hazard portions of incinerators; and

(iii) Boiler front

(iv) Purifiers for heated fuel oil. See 3.3.1(b) of this Part.

Activation of any local application system shall give a visual and distinct audible alarm in the protected space and at continuously manned stations. The alarm is to indicate the specific system activated. The system alarm requirements described within this paragraph are in addition to, and not a substitute for, the detection and

fire alarm system required elsewhere in 6.2 and 6.3 of this Chapter. A bridge alarm is to be provided with a visual notification when the system has been deactivated or placed in manual mode.

6.2.6 Fixed fire extinguishing systems

(a) Gas smothering

(i) Storage

Where the gas smothering medium is stored outside of the protected space, the storeroom is to be situated in a safe and readily accessible position and is to be effectively ventilated by a ventilation system independent of all other spaces.

Spaces for storage of cylinders or tanks for extinguishing gas are not to be used for other purposes. These spaces are not to be located forward of the forward collision bulkhead, when fitted. Access to these spaces is to be possible from the open deck. Spaces situated below the deck are to be located no more than one deck below the open deck.

Spaces where entrance from the open deck is not provided or which are located below deck are to be fitted with mechanical ventilation. The exhaust duct (suction) is to be lead to the bottom of the space. Such spaces are to be ventilated with at least six air changes per hour.

Fire-extinguishing media protecting the cargo holds (see 6.2.13 below) may be stored in a room located forward of the cargo holds, but aft of the collision bulkhead, provided that both the local manual release mechanism and remote control(s) for the release of the media are fitted, and the latter is of robust construction or so protected as to remain operable in case of fire in the protected spaces. The remote controls are to be placed in the accommodation area in order to facilitate their ready accessibility by the crew. The capability to release different quantities of fire-extinguishing media into different cargo holds so protected is to be included in the remote release arrangement..

Where the CO_2 system discharge piping is also used for the sample extraction smoke detection system piping, see Chapter 10 of the International Code for Fire Safety Systems (FSS Code), as amended), for the location of the indicating unit.

(ii) Design

Containers and associated pressure components are to be designed based upon an ambient temperature of 55°C.

For CO_2 fire extinguishing systems, the wall thickness of steel piping is to be suitable for the pressure and not less than the thickness identified in Table IV 6-3. Column A is for piping from storage containers to distribution station, and column B is for piping from distribution station to nozzles. For other fixed gas fire extinguishing systems, calculations showing compliance with 3.1.5 of this Part are to be submitted for approval.

Where the fire-extinguishing medium is used as the power source for the pre-discharge alarm, the piping to the alarm is to comply with Column B of Table IV 6-3.

Table IV 6-3
Minimum Steel Pipe Wall Thickness for CO_2 Medium Distribution Piping

Nominal size, mm	OD mm	A mm	B mm
15	21.3	2.8	2.6
20	26.9	2.8	2.6
25	33.7	4.0	3.2
32	42.4	4.0	3.2
40	48.3	4.0	3.2
50	60.3	4.5	3.6
65	76.1	5.0	3.6
80	88.9	5.5	4.0
90	101.6	6.3	4.0
100	114.3	7.1	4.5
125	139.7	8.0	5.0
150	168.3	8.8	5.6

Notes:

(1) The above minimum thicknesses are derived from those thicknesses available in ISO 4200 Series 1 (OD), JIS (N.P.S.), or ASTM (N.P.S.). Diameter and thickness according to other recognized standards will be accepted.

(2) For threaded pipes, where approved, the thickness is to be measured to the bottom of the thread.

(3) The internal surface of pipes outside of the engine room is to be galvanized.

(4) For larger diameters the minimum wall thickness will be subject to special consideration by the Society.

(5) In general, the minimum thickness is the nominal wall thickness and no allowance need be made for negative tolerance or reduction in thickness due to bending.

The pressure rating of pipe connections such as flanges from the distribution aftermost valve to discharge nozzles is to be not less than the maximum pressure developed during the discharge of CO_2 into protected spaces.

The relief valve of a CO_2 fire extinguishing system is to discharge outside of the CO_2 container storage compartment. In addition, in piping sections where valve arrangements introduce sections of closed piping, such sections are to be fitted with a pressure relief valve and the outlet of the valve is to be led to open deck.

Gray cast iron piping components are not to be used for fixed gas fire extinguishing systems. All discharge piping, fittings and nozzles in the protected spaces are to be constructed of materials having a melting temperature which exceeds 925°C. The piping and associated equipment are to be adequately supported.

Threaded joints in CO_2 systems are to be allowed only inside protected spaces and in CO_2 cylinder rooms.

(iii) Alarm

Means are to be provided for automatically giving audible and visual warning of the release of fire extinguishing gas into any space to which personnel normally have access. The audible alarms are to be located so as to be audible throughout the protected space with all machinery operating, and the alarms are to be distinguished from other audible alarms by adjustment of sound pressure or sound patterns. The alarm is to operate for at least a 20 second period before the gas is released. Alarms may be pneumatically (by the extinguishing medium or by air) or electrically operated.

(1) Electric
If electrically operated, the alarms are to be supplied with power from the main and an emergency source of electrical power.

(2) Pneumatic

If pneumatically operated by air, the air supply is to be dry and clean and the supply reservoir is to be automatically kept charged at all times and is to be fitted with a low pressure alarm. The air supply may be taken from the starting air receivers. Any stop valve fitted in the air supply line is to be locked or sealed in the open position. Any electrical components associated with the pneumatic system are to be powered from the main and an emergency source of electrical power.

(3) Uninterruptible power supply

For fire extinguishing systems that protect the machinery space containing the main source of power, instead of the power supply arrangements required above for electrically operated alarms and electrical components associated with pneumatic alarms, an uninterruptible power supply which is supplied with power from the emergency switchboard is to be provided.

(iv) Controls

Except as otherwise permitted herein, two independent manual control arrangements are to be provided, one of them being positioned at the storage location and the other in a readily accessible position outside the protected space.

(v) Air reservoirs

The volume of starting air receivers converted to free air volume is to be added to the gross volume of the machinery space when calculating the necessary quantity of the extinguishing medium. Alternatively, a discharge pipe from the safety relief valves or other pressure relief devices may be fitted and led directly to the open air.

(b) Carbon dioxide systems

Fixed carbon dioxide fire extinguishing system is to be in accordance with the requirements of 7.7.3.3.2-7.7.3.3.16 and 7.7.3.4 of the International Code of Safety for High-Speed Craft and Chapter 5 of the International Code for Fire Safety Systems.

Note: Attention is to be paid that positive means is to be provided to ensure correct sequential operation of the controls of carbon dioxide system as specified in 7.7.3.4.5 of HSC Code. See FSS Code Chapter 5, 2.2.2.1 and MSC.1/Circ. 1456.

(c) Clean agent fire extinguishing systems

Fixed gas fire-extinguishing systems equivalent to those specified in 6.2.6(a) through 6.2.6(b) above are to be submitted for approval, based on the guidelines specified in the IMO MSC/Circ. 848 as amended by MSC/Circ. 1267 and this subsection.

Fire extinguishing systems using Halon 1211, 1301, and 2402 and perfluorocarbons are prohibited. The use of a fire-extinguishing medium, which either by itself or under expected conditions of use gives off toxic gases, liquids and other substances in such quantities as to endanger persons, is not permitted.

(i) Fire suppression agent

The agent is to be recognized as a fire extinguishing medium by NFPA Standard 2001 or other recognized national standard. The minimum extinguishing concentration for net volume total flooding of the protected space at the lowest expected operating temperature, but not greater than 0°C (32°F), is to be determined by an acceptable cup burner test. The minimum design concentration is to be at least 30% above the minimum extinguishing concentration and is to be verified by full-scale test (see 6.2.6(c)(ii) below).

The fire extinguishing agent is to be acceptable for use in occupied spaces by U.S. EPA or other recognized national organization. The concentrations for cardiac sensitization NOAEL (No Observed Adverse Effect Level), LOAEL (Lowest Observed Adverse Effect Level) and ALC (Approximate Lethal Concentration) are to be submitted.

(ii) Fire tests

The system is to pass the fire tests in the Appendix of the IMO MSC/Circ. 848 as amended by MSC/Circ. 1267. The testing is to include the system components.

The system is to pass an additional fire test (number 1 in the Appendix of MSC/Circ. 848) with the agent storage cylinder at the lowest expected operating temperature, but not greater than 0°C.

(iii) System components

The system is to be suitable for use in a marine environment. Major components (valves, nozzles, etc.) are to be made of brass or stainless steel, piping is to be corrosion resistant (stainless steel or galvanized) and the material is to have a melting point of not less than 927°C.

The system and its components are to be designed, manufactured and installed in accordance with recognized national standards.

Containers and associated pressure components are to be designed based upon an ambient temperature of 55°C.

Minimum wall thickness for distribution piping is to be in accordance with Table IV 6-3 (Columns A or B, as applicable).

(iv) System installation

(1) Storage

As far as practicable, the fire suppression agent is to be stored outside the protected space in a dedicated storeroom. The storeroom is to be in accordance with 6.2.6(a)(i), except that when mechanical ventilation is provided, the location of the exhaust duct (suction) is dependent on the density of the agent relative to air.

When allowed by the flag Administration, the fire suppression agent may be stored inside the protected space. In addition to the related instructions from the flag Administration, the installation is to be in accordance with paragraph 11 of IMO MSC/Circ. 848 as amended by MSC/Circ. 1267.

In the case of new installation in existing units, the storage of the fire suppression agent within a low fire risk space with a net volume at least 2 times greater than the net volume of the protected space may be specially considered, based on the type of agent and the possible hazards for the personnel within the space.

(2) Alarm

An audible and visual predischarge alarm in accordance with 6.2.6(a)(iii) and paragraph 6 of IMO MSC/Circ. 848 as amended by MSC/Circ. 1267 is to be provided inside the protected space in which personnel normally work or to which they have access.

(3) Controls

Except as otherwise permitted herein two independent manual control arrangements are to be provided, one of them being positioned at the storage location and the other in a readily accessible position outside of the protected space.

Automatic actuation is not permitted when the protected space is normally manned or interferes with the safety navigation of the craft. If the protected space is normally unmanned and may be entered occasionally for brief periods such as for repairs, maintenance or other purpose, automatic actuation may be allowed in addition to manual actuation, provided that the following conditions are met:

a) The egress from the protected space is horizontal. Exit doors from the spaces are to be outward-swinging self-closing doors (i.e., opening in the direction of escape routes) which can be opened from the inside, including when the doors are locked from the outside.

b) Notices that the space is protected by an automatic activation system are prominently posted at the entrance to the space.

c) A switch is provided near the entrance to disable the automatic release feature of the system.

The switch is to have an indicator of its status such as red pilot light to indicate when the switch is activated (automatic release feature disabled). A sign is to be posted near the switch indicating that the automatic release feature is to be disabled when the space is occupied and that the automatic actuation is to be enabled when leaving the space. The sign is to also indicate that the manual release of the system remains enabled and the space is to be vacated immediately when the release alarm sounds.

d) When the automatic release feature is disabled, all other controls, alarms, etc., are to remain activated.

e) An indicator at the control console is provided to indicate when the automatic release feature has been disabled.

f) The medium release warning alarm is to operate for the length of time needed to evacuate the space, but in no case less than 30 seconds for space exceeding 170 m^3 and 20 seconds for spaces 170 m^3 or less before the medium is released.

g) The automatic release of a clean agent fire extinguishing system is to be approved by the craft's flag Administration.

(4) Nozzles

The nozzle type, maximum nozzle spacing, maximum height and minimum nozzle pressure are to be within the limits to provide fire extinction as tested and verified in the appropriate fire test (see 6.2.6(c)(ii) above.).

(d) Foam

(i) Fixed high expansion foam systems

In addition to the applicable requirements of the Rules, fixed, high expansion foam systems are to be in accordance with Chapter 6.2.1 and Chapter 6.2.2 of the International Code for Fire Safety Systems.

Fixed foam fire-extinguishing systems using inside air are to be designed, constructed and tested in accordance with the requirements identified in MSC.1/Circ. 1271, Guidelines for the Approval of High-Expansion Foam Systems Using Inside Air for the Protection of Machinery Spaces and Cargo Pump-Rooms.

Foam concentrates are to be of an approved type.*

Note: *Reference is made to the International Maritime Organization MSC/Circular 670 "Guidelines for the Performance and Testing Criteria, and Surveys of High-Expansion Foam Concentrates for Fixed Fire-Extinguishing Systems."

(ii) Fixed low expansion foam systems

Low expansion foam systems may be fitted in addition to the required fixed fire extinguishing system. In addition to the applicable requirements of the Rules, fixed low expansion foam systems are to be in accordance with Chapter 6.2.1 and Chapter 6.2.3 of the International Code for Fire Safety Systems. Foam concentrates are to be of an approved type.**

Note: **Reference is made to the International Maritime Organization MSC/Circular 582 "Guidelines for the Performance and Testing Criteria, and Surveys of Low-Expansion Foam Concentrates for Fixed Fire-Extinguishing Systems."

(e) Fixed Water Spraying Systems

In addition to the requirements of the Rules, fixed water spraying systems are to be in accordance with Chapter 7 of the International Code for Fire Safety Systems.

6.2.7 Fireman's outfit

At least two complete fireman's outfits are to be carried onboard the craft.

Each outfit is to consist of an approved breathing apparatus, a lifeline, a safety lamp, an axe, nonconducting boots and gloves, a rigid helmet and protective clothing.

2 spare charges are to be provided for each required breathing apparatus. All air cylinders for breathing apparatus are to be interchangeable.

A minimum of two two-way portable radiotelephone apparatus for each fire party for fire-fighter's communication are to be carried on board. Those two-way portable radiotelephone apparatus are to be of an explosion-proof type or intrinsically safe.

The fireman's outfits and equipment are to be stored so as to be easily accessible and ready for use and are to be stored in widely separate positions.

6.2.8 Emergency escape breathing devices (EEBDs)

(a) Accommodation spaces

All ships are to carry at least two emergency escape breathing devices and one spare device within accommodation spaces.

(b) Machinery spaces

On all craft, within the machinery spaces, emergency escape breathing devices are to be situated ready for use at easily visible places, which can be reached quickly and easily at any time in the event of fire. The location of emergency escape breathing devices is to take into account the layout of the machinery space and the number of persons normally working in the spaces. (See the Guidelines for the performance, location, use and care of emergency escape breathing devices, MSC/Circ. 849 and 1081). The number and locations of EEBDs are to be indicated in the fire control plan required in 6.1.1(e) of this Chapter.

A summary of the MSC/Circ. 1081 requirements are shown in Table IV 6-4 below. This applies to machinery spaces where crew are normally employed or may be present on a routine basis.

Table IV 6-4
Minimum Number of Required EEBDs

A In machinery spaces for category A containing internal combustion machinery used for main propulsion(1) :	
(a)	1 EEBD in the engine control room, if located within the machinery space
(b)	1 EEBD in workshop areas. If there is, however, a direct access to an escape way from the workshop, an EEBD is not required; and
(c)	1 EEBD on each deck or platform level near the escape ladder constituting the second means of escape from the machinery space (the other means being an enclosed escape trunk or watertight door at the lower level of the space).
B In machinery spaces of category A other than those containing internal combustion machinery used for main propulsion,	
1 EEBD should, as a minimum, be provided on each deck or platform level near the escape ladder constituting the second means of escape from the space (the other means being an enclosed escape trunk or watertight door at the lower level of the space).	
C In other machinery spaces	
The number and location of EEBDs are to be determined by the Flag Administration.	

Notes:

(1) Alternatively, a different number or location may be determined by the Flag Administration taking into consideration the layout and dimensions or the normal manning of the space.

6.2.9 Portable fire extinguishers

Spare charges are to be provided for 100% of the first 10 extinguishers and 50% of the remaining fire extinguishers capable of being recharged on board. Not more than 60 total spare charges are required. Instructions for recharging are to be carried on board.

For fire extinguishers which cannot be recharged on board, additional portable fire extinguishers of the same quantity, type, capacity and number, as determined above, are to be provided in lieu of spare charges.

6.2.10 Portable foam applicator units

Each category A machinery space is to be provided with at least one portable foam applicator unit.

(a) Specification

A portable foam applicator unit is to consist of a foam nozzle/branch pipe, either of a self-inducing type or in combination with a separate inductor, capable of being connected to the fire main by a fire hose, together with a portable tank containing at least 20 *l* of foam concentrate and at least one spare tank of foam concentrate of the same capacity.

(b) System performance

(i) The nozzle/branch pipe and inductor is to be capable of producing effective foam suitable for extinguishing an oil fire, at a foam solution flow rate of at least 200 *l*/min at the nominal pressure in the fire main.

(ii) The foam concentrate shall be approved by the Society based on guidelines in the Guidelines for the Performance and Testing Criteria and Surveys of Low-expansion Foam Concentrates for Fixed Fire-extinguishing Systems (MSC/Circ.582/Corr.1).

(iii) The values of the foam expansion and drainage time of the foam produced by the portable foam applicator unit is not to differ more than ±10% of that determined in 6.2.10(b)(ii) above.

(iv) The portable foam applicator unit is to be designed to withstand clogging, ambient temperature changes, vibration, humidity, shock, impact and corrosion normally encountered on ships.

6.2.11 Sample extraction smoke detection systems

Any required fixed sample extraction smoke detection system is to meet the requirements in Chapter 10 of the International Code for Fire Safety Systems.

6.2.12 Fixed fire extinguishing arrangements in way of cargo spaces

(a) Cargo craft of 2,000 gross tonnage and over

Except for cargo spaces covered by 6.2.13 and 6.2.14 below, cargo spaces of cargo craft of 2000 gross tonnage and above are to be provided with approved fixed fire extinguishing systems.

(b) Exceptions

A fixed system need not be fitted in the case of cargo holds fitted with steel hatch covers, and where all ventilators and other openings leading to the holds can be effectively closed, and the craft is constructed and intended solely for carrying ore, coal, grain, unseasoned timber or noncombustible cargoes.

(c) Controls

As an alternative to providing the controls required by 6.2.6(a)(iv) above, a single manual means may be provided at the storage location.

6.2.13 Ro-Ro cargo spaces

(a) Fire detection

An approved automatic fire detection and fire alarm system complying with 6.1.6 of this Chapter and the following is to be provided. Manual call points are to be provided to activate the fire alarm from the navigation bridge and the passageways having entrances to the ro-ro spaces. The fire alarm indicator/control panel is to be located on the bridge or at the fire control station, if provided. When the indicator/control panel is located at the fire control station, an additional alarm is to be provided on the navigation bridge.

(b) Fire extinguishing arrangements

Ro-ro cargo spaces capable of being sealed are to be fitted with an approved fixed gas fire extinguishing system. If a carbon dioxide system is fitted, the quantity of gas available is to be at least sufficient to give a minimum volume of free gas equal to 45% of the gross volume of the largest such cargo space which is capable of being sealed, and the arrangements are to be such as to ensure that at least two thirds of the gas required for the relevant spaces is introduced within 10 minutes.

In lieu of the above, a fixed high expansion foam system or water spray system may be fitted subject to special consideration. Ro-ro spaces not capable of being sealed are to be fitted with a fixed pressure waterspraying system. The water-spraying system, drainage and pumping arrangements will be subject to special consideration.

As an alternative to providing the controls required by 6.2.6(a)(iv) above, a single manual means may be provided at the storage location.

(c) Portable fire extinguishers

At least one approved portable extinguisher is to be located at each cargo space access.

(d) Ro-Ro spaces carrying motor vehicles with fuel in their tanks

(i) Each ro-ro cargo space intended for the carriage of motor vehicles with fuel in their tanks for their own propulsion is to meet the requirements of 4.19.1(c) of this Part.

(ii) Gravity drainage systems are not to be led to machinery spaces or other spaces where sources of ignition are present.

(iii) In addition, each space is to be provided with at least three water fog applicators and one portable foam applicator unit complying with the provisions of 6.2.10 above, provided that at least two such units are available on the craft for use in such ro-ro cargo spaces.

(iv) Portable fire extinguishers suitable for fighting oil fires are to be provided at each vehicle deck level in all spaces where vehicles are carried. Extinguishers are to be located not more than 20 m apart on both sides of the craft. Portable extinguishers required under 6.2.13(c) above may be credited in meeting this requirement.

6.2.14 Cargo spaces carrying vehicles with fuel in their tanks (other than Ro-Ro Spaces)

Cargo spaces, other than ro-ro spaces, intended for the carriage of motor vehicles with fuel in their tanks for their own propulsion are to comply with 6.2.13 above with the following exceptions:

(a) A sample extraction smoke detection system complying with the provisions of 6.2.11 above may be permitted in lieu of 6.2.13(a) above , and

(b) The provisions of 6.2.13(d)(iii) and 6.2.13(d)(iv) above may be omitted

6.2.15 Release of smoke from machinery space

Suitable arrangements are to be made to permit the release of smoke, in the event of fire, from the machinery space of Category A. The normal ventilation may be acceptable for this purpose. The means of control is to be provided for permitting the release of smoke and such control is to be located outside the space concerned so that they will not be rendered inaccessible in the event of fire in the space they serve. See also 2.1.14(a) of Part VII of the Rules for Steel Ships.

6.3 Craft under 500 Gross Tonnage

6.3.1 Fire pumps

(a) Number of pumps

All craft are to have at least 2 fire pumps. Only 1 of the pumps need be independently power-driven, and one of the pumps may be attached to the propulsion unit.

(b) Capacity

The capacity of each power-driven fire pump is to be in accordance with the Table IV 6-5. Hand pumps, where permitted, are to have a minimum capacity of 1.1 m^3/hr.

Table IV 6-5
Fire Pump Minimum Capacity for Craft less than 500 Gross Tonnage

Craft Length	Minimum Capacity
24 m ≤ L < 30.5 m	11.0 m^3/hr
30.5 m ≤ L < 61 m	14.3 m^3/hr
L > 61 m	Capacity to be in accordance with 6.2.3(a)

6.3.2 Fixed fire extinguishing systems

(a) Fixed systems

For all craft, fixed fire extinguishing systems are to be fitted in the machinery spaces when propulsion and auxiliary engines with a total aggregate power of 750 kW or greater are installed (see 1.2.1 of this Part) and in any machinery space in which an oil fuel unit for heated fuel oil is installed, regardless of the total aggregate power. Also see 6.2.6 of this Chapter.

(b) Carbon dioxide systems

Where a fixed carbon dioxide fire extinguishing system is installed, the system is to comply with the requirements of 6.2.6(a) and 6.2.6(b) of this Chapter, except that storage arrangements may be in accordance with the following.

(i) Storage

Generally, the cylinders are to be located outside of the protected space in a room which is situated in a safe and readily accessible location. The access doors to the storage space are to open outwards. The storage room is to be gastight and effectively ventilated. The ventilation system is to be independent of the protected space. Any entrance to the storage room is to be independent of the protected space, except that where this is impracticable due to space limitations, the following requirements may be considered:

(1) The door between the storage location and the protected space is to be self-closing with no hold-back arrangements.

(2) The space where cylinders are stored is to be adequately ventilated by a system which is independent of the protected space.

(3) Means are to be provided to prevent unauthorized release of gas, such as containment behind a break glass.

(4) There is to be provision to vent the bottles to the atmosphere in order to prevent a hazard to personnel occupying the storage area.

(5) An additional entrance to the storage location, independent of the protected space, is provided.

6.3.3 Portable extinguishers

Machinery spaces are to be provided with portable fire extinguishers, in accordance with the applicable requirements in Table IV 6-2.

6.3.4 Axe

One fire axe is to be provided on each craft.

6.4 Craft less than 24 meters in Length

6.4.1 General

Craft less than 24 meters in length are to comply with the following and the requirements of 6.1.1 and 6.1.7 of this Chapter.

6.4.2 Fire pumps, fire main, hydrants, and hoses

(a) Number of pumps

All craft are to have at least two fire pumps. Only one of the pumps need be independently power-driven, and one of the pumps may be attached to the propulsion unit. For craft less than 24 m in length, one power-driven pump, which may be an attached unit, and one hand operated fire pump may be provided.

(b) Pump capacity and pressure

Power driven pumps are to have a capacity of at least 5.5 m^3/hr. Hand pumps, where permitted are to have a minimum capacity of at least 1.1 m^3/hr. The pumps are to have sufficient pressure such that they are capable of directing an effective stream of water to any part of the craft through any single hydrant.

(c) Materials

Piping for the fire main is to meet the requirements of 3.1.4 of this Part.

(d) Hydrants

The number and position of the hydrants are to be such that at least one jet of water may reach any part of the craft with a single hose.

(e) Hoses and nozzles

Hoses may be of a good commercial grade having a diameter of not less than 16 mm and are to have a minimum test pressure of 10.3 bar and a minimum burst pressure of 31.0 bar.

One fire hose with the couplings and nozzle is to be provided for each hydrant and for each portable hand pump. Additionally, at least one spare hose is to be kept onboard.

Nozzles are to be the dual-purpose type (with spray and jet capability) and may be of commercial grade with a rating at least equal to the hose.

6.4.3 Portable fire extinguishers

Portable extinguishers are to be provided in the quantities and locations indicated in Table IV 6-6. See Table IV 6-1 for classification.

Table IV 6-6
Portable and Semi-Portable Extinguishers

Space	Extinguisher type	Arrangement
Control Stations		
Wheelhouse	C-II	1 in vicinity of exit(3)
Accommodations		
Sleeping accommodations	A-II	1 in each sleeping accommodation space Where occupied by more than 4 persons.)
Corridors	A-II	1 in each main corridor (May be located in stairways.)
Service Spaces		
Galley	B-II or C-II	1 for each galley
Storerooms	A-II	1 for each located in vicinity of exits, either inside or outside of spaces(3)
Workshops	A-II	1 outside the space in vicinity of exit(3)
Machinery Spaces/Machinery Compartments		
Diesel engines or gas turbine in an engine room(5)	B-II	1 for each 746 kW, but not less than 2 nor more than 6(1)(4)
Diesel engines or gas turbine in an engine compartment(6)	B-II	1 for each engine propulsion engine, but not less than 2
Outboard engines	B-II	1 required
Electric motors or generators of the open type	C-II	1 for each motor or generator unit(2)

Notes:

(1) When installation is on weather deck or open to atmosphere at all times, 1 B-II type extinguisher for every 3 engines is allowable.

(2) Small electrical appliances, such as fans, etc., are not to be counted or used as bases for determining number of extinguishers required.

(3) Vicinity means within 1 m.

(4) For engine rooms, at least one fire extinguisher is to be located outside the machinery spaces in vicinity of the entrance to the space.

(5) An engine room is defined as an enclosed space which contains the propulsion or generating machinery fitted with a door and having sufficient size so that a person can safely enter the space with all equipment in operation.

(6) An engine compartment is defined as an enclosed space which contains the propulsion or generating machinery of sufficient size for the equipment only and is typically not accessed while the craft is in operation.

6.4.4 Machinery spaces

Engine Rooms (as defined in Table IV 6-6, Note (5)) and Engine Compartments (as defined in Table IV 6-6, Note (6)), with propulsion and auxiliary engines having a total aggregate power of 750 kW or greater are installed are to be fitted with a fixed fire extinguishing system complying with 6.2.6 of this Chapter.

Automatic release may be approved for small, unattended engine rooms fitted with a Medium Release Warning System complying with 6.2.6(a)(iii) of this Chapter. Also, warning signs are to be provided, indicating that the space is protected by an automatic fire extinguishing system.

The storage containers may be located inside the protected space, provided the controls for the release of the medium are located in a readily accessible location outside protected space. Furthermore, the point where the controls enter the protected space to the location of the storage containers is as short as practical.

Engine Rooms (as defined in Table IV 6-6, Note (5)) and Engine Compartments (as defined in Table IV 6-6, Note (6)) are to be fitted with a fire detection system complying with 6.1.6 of this Chapter.

6.4.5 Accommodation and service spaces

A fire detection and alarm system complying with 6.1.6 of this Chapter is to be provided for accommodation and service spaces where the sum of the length of the spaces is greater than 5 meters or where sleeping accommodations are provided, regardless of length of the spaces.

6.4.6 Fixed fire extinguishing systems

In addition to 6.2.6 of this Chapter, other extinguishing systems may be approved, provided they are shown to be no less effective than approved gas systems.

Tel: *+886 2 25062711*
Fax: *+886 2 25074722*
E-mail: *cr.tp@crclass.org*
Website: *http://www.crclass.org*
© CR – All rights reserved